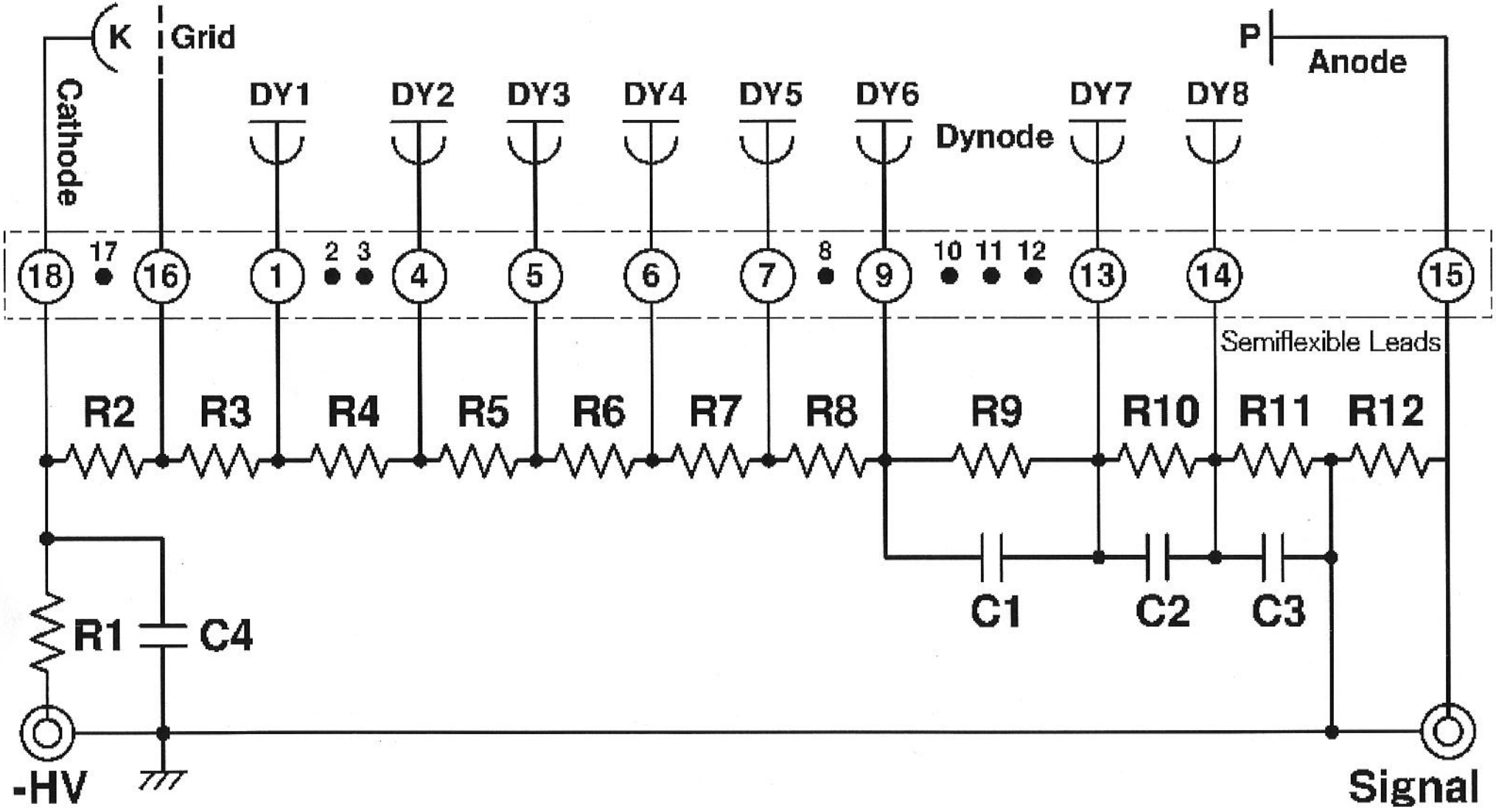
K
Grid
Cathode
P
Anode
DY1
DY2
DY3
DY4
DY5
DY6
Dynode
DY7
DY8
18
17
16
1
2
3
4
5
6
7
8
9
10
11
12
13
14
15
Semiflexible Leads
R2
R3
R4
R5
R6
R7
R8
R9
R10
R11
R12
C1
C2
C3
R1
C4
-HV
Signal

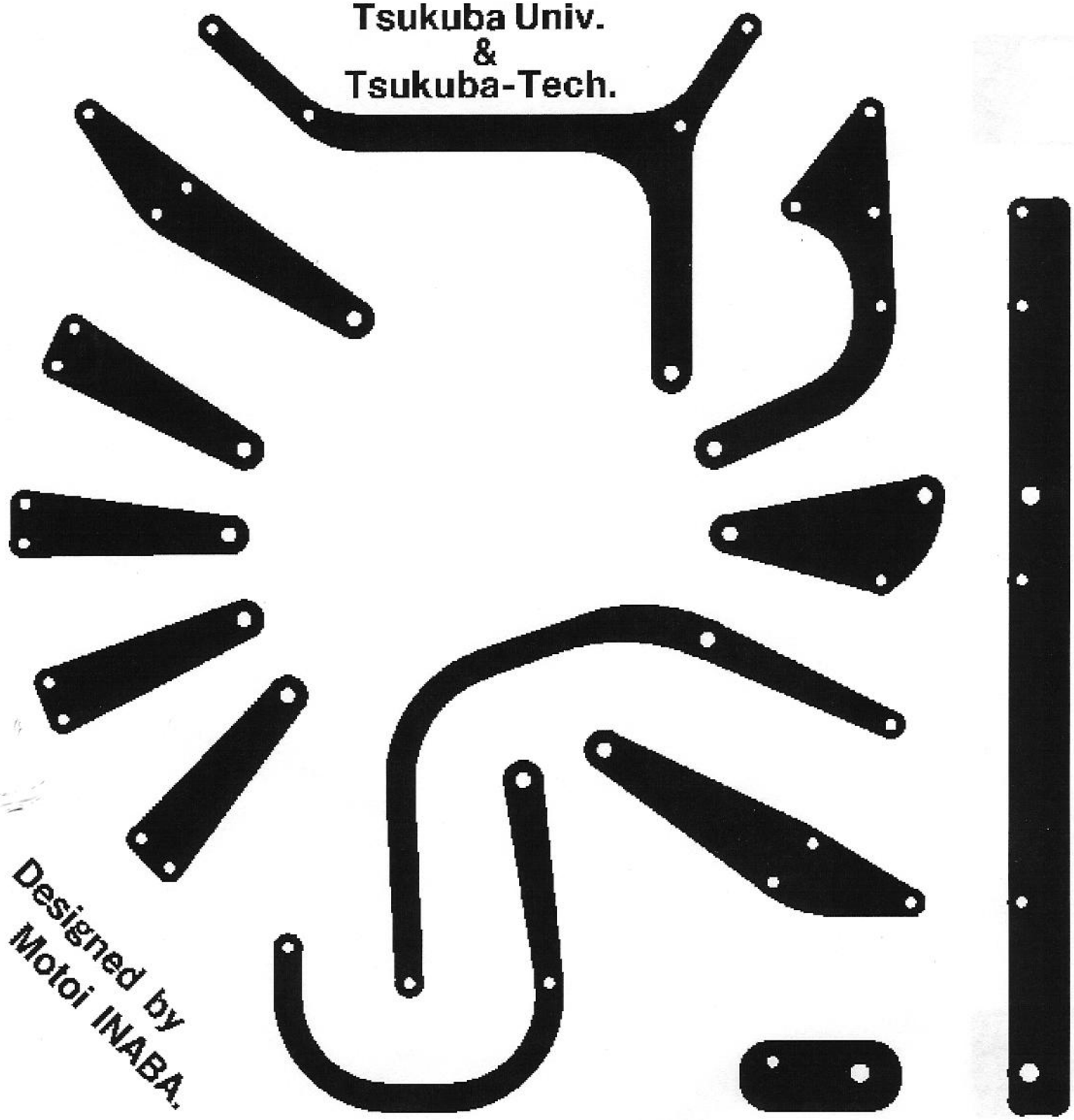
Tsukuba Univ.
&
Tsukuba-Tech.
Designed by
Motoi INABA.

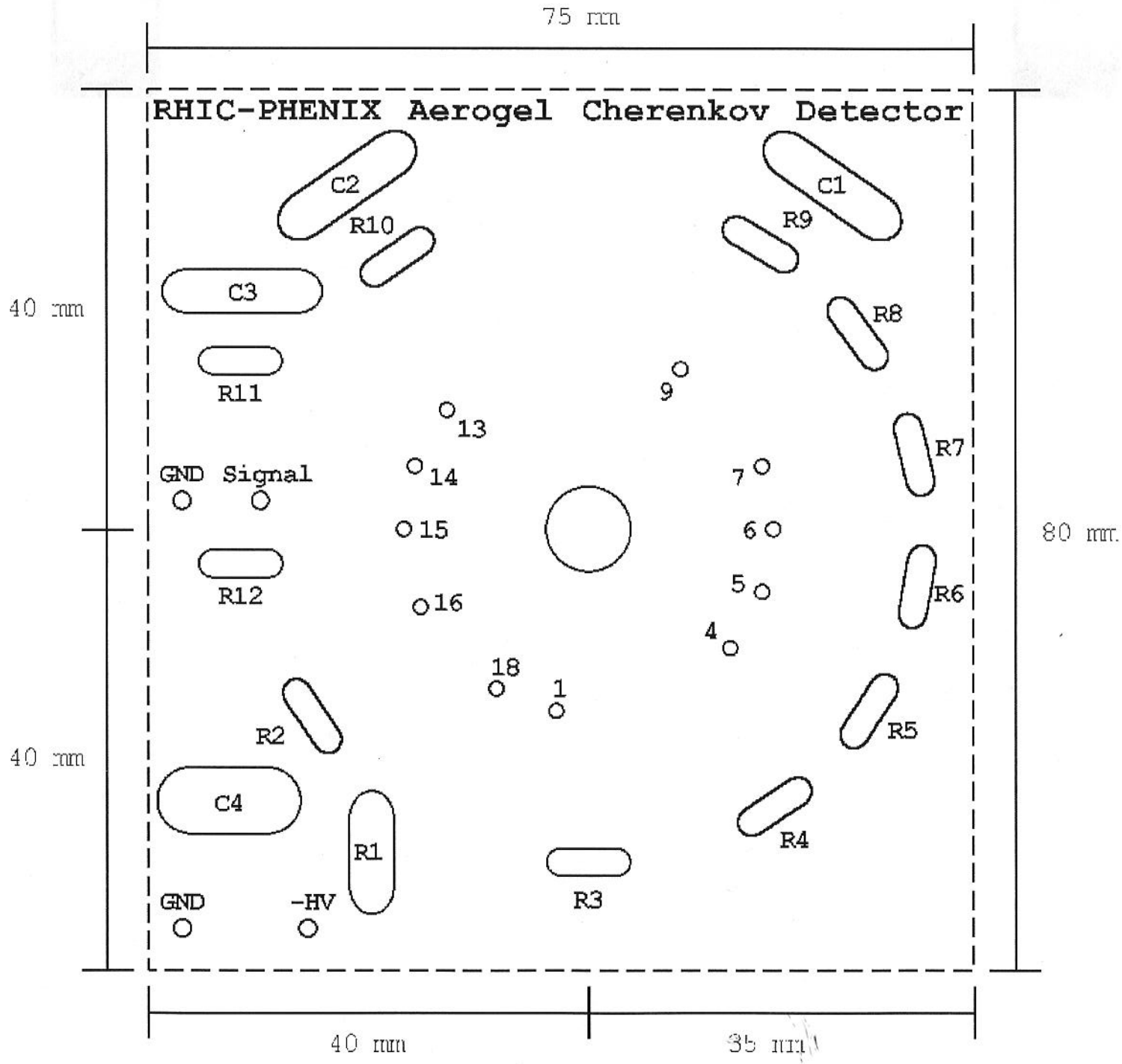
75 mm
RHIC-PHENIX Aerogel Cherenkov Detector
C2
C1
R10
R9
C3
R8
40 mm
R11
9
13
R7
GND
Signal
14
7
15
6
80 mm
R12
5
R6
16
4
18
1
R2
R5
40 mm
C4
R4
R1
R3
GND
-HV
40 mm
35 mm

| Part Name | Value | Kind | Type | Maximum Working Voltage | Dielectric Withstanding Voltage | Power Rating |
|---|---|---|---|---|---|---|
| R1 | 10 kΩ | Coat-Insulate Fixed Metal Film Resistor | MF 1/2 | 350 V | 700 V | 1/2 W |
| R2 - R11 | 680 kΩ | | MF 1/4 | 250 V | 500 V | 1/4 W |
| R12 | 200 kΩ | | MF 1/4 | 250 V | 500 V | 1/4 W |
| C1 - C3 | 10 nF | High Voltage Ceramic Condenser | DD1464E103P500 | 500 V | | |
| C4 | 4.7 nF | | DEBE33F472ZA3B | 3150 V | | |