DWG NO	SHT 1 OF 1	REV A
105-0215-036		

NOTES: MAT'L: 1/8 THK. ALUM 5052 SHEET.

REVISIONS							
REV	ZONE	ECN NO.	DESCRIPTION	BY	DATE	CKR	APP
A			INITIAL RELEASE				

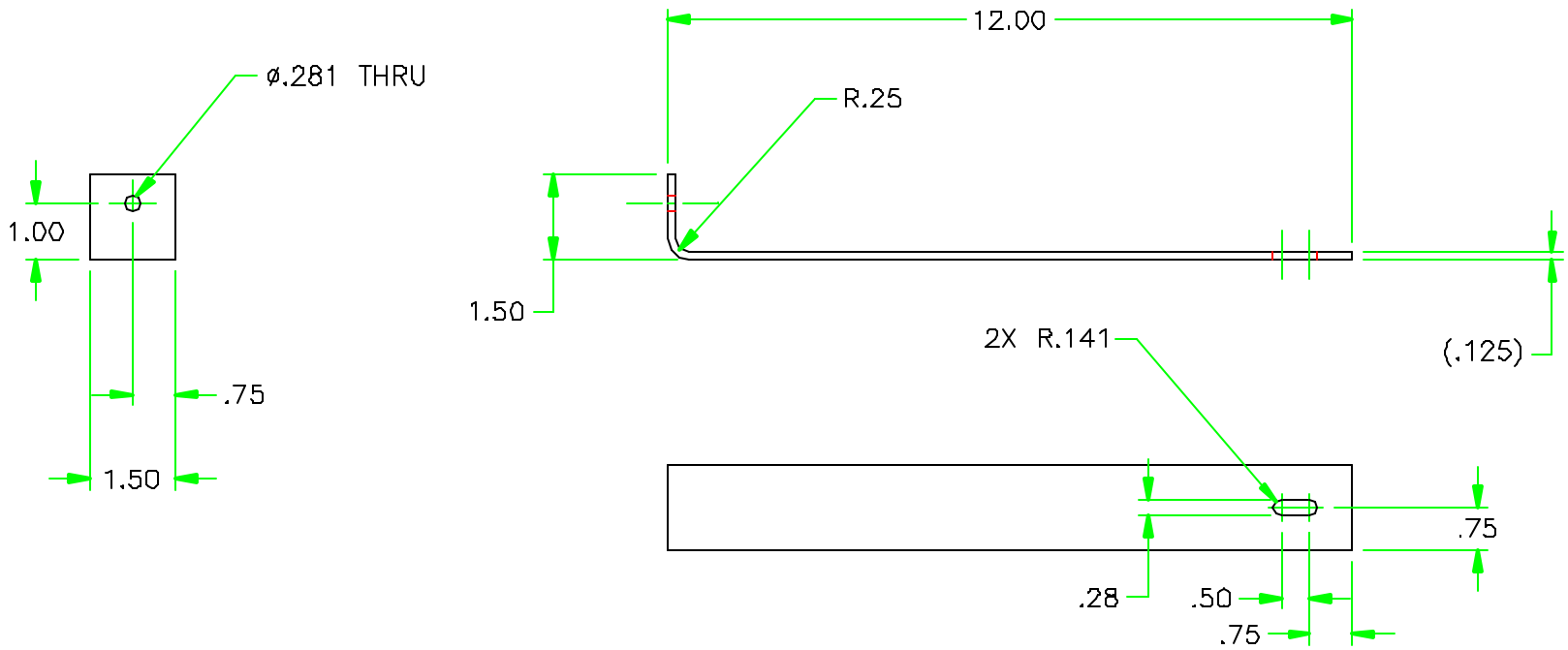

OUTSTANDING ECN NUMBERS	INTERPRET IN GENERAL ACCORDANCE WITH ASME Y14.24M-1989	RHIC	BROOKHAVEN NATIONAL LABORATORY UPTON, N.Y. 11973
	UNLESS OTHERWISE SPECIFIED	DRAWN BY: A. RUGA 9/10/03	TITLE: PHENIX AEROGEL DETECTOR RETAINING STRAP
	DIMENSIONS ARE IN INCHES DECIMAL TOLERANCES .X ± .06 .XX ± .02 .XXX ± .005 ANGULAR TOLERANCE ± 1°	DESIGN APPROVAL: CHECKED BY: P. J. KROON 9/10/03 ENGINEER APPROVAL: SUPERVISOR APPROVAL: D.A. APPROVAL: P. J. KROON 9/10/03	SIZE: B DRAWING NUMBER: 105-0215-036 REV. A
	250 FINISH BREAK SHARP EDGES MAX. .03 MIN. .01		D.A. CATEGORY: A3 SCALE: 1/2 WEIGHT: NA SHEET 1 OF 1