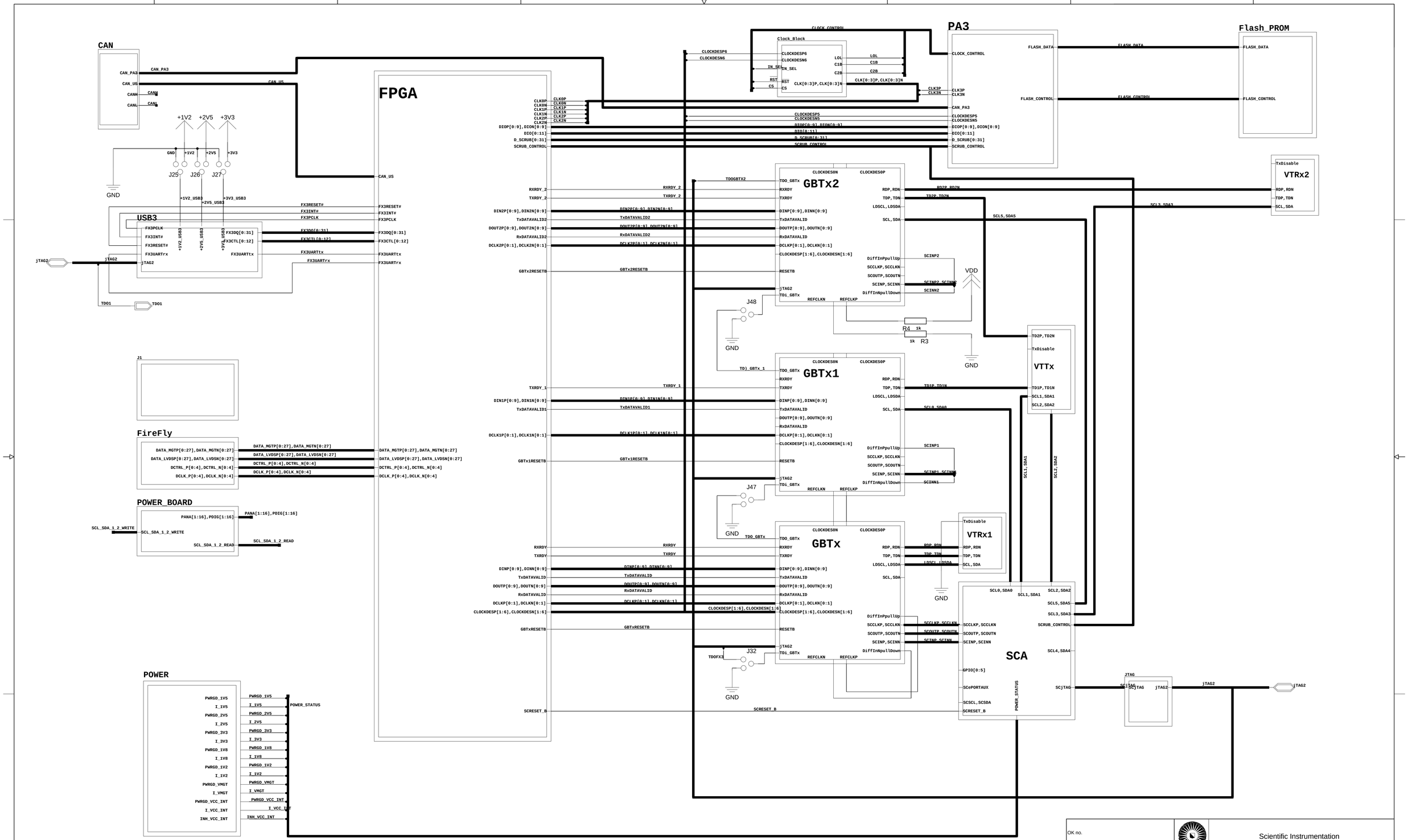
CAN
CAN_PA3
CAN_US
CANH
CANL
FPGA
PA3
Flash_PROM
FLASH_DATA
FLASH_CONTROL
CLOCK_CONTROL
Clock_Block
CLOCKDESP6
CLOCKDESN6
IN_SEL
RST
CS
CLK[0:3]P,CLK[0:3]N
LOL
C1B
C2B
CLK[0:3]P,CLK[0:3]N
CLK3P
CLK3N
CAN_PA3
CLOCKDESP5
CLOCKDESN5
DIOP[0:9],DION[0:9]
DIO[0:11]
D_SCRUB[0:31]
SCRUB_CONTROL
+1V2
+2V5
+3V3
GND
J25
J26
J27
+1V2_USB3
+2V5_USB3
+3V3_USB3
USB3
FX3PCLK
FX3INT#
FX3RESET#
FX3UARTrx
FX3UARTtx
FX3DQ[0:31]
FX3CTL[0:12]
jTAG2
TDO1
J1
FireFly
DATA_MGTP[0:27],DATA_MGTN[0:27]
DATA_LVDSP[0:27],DATA_LVDSN[0:27]
DCTRL_P[0:4],DCTRL_N[0:4]
DCLK_P[0:4],DCLK_N[0:4]
POWER_BOARD
PANA[1:16],PDIG[1:16]
SCL_SDA_1_2_WRITE
SCL_SDA_1_2_READ
POWER
PWRGD_1V5
I_1V5
PWRGD_2V5
I_2V5
PWRGD_3V3
I_3V3
PWRGD_1V8
I_1V8
PWRGD_1V2
I_1V2
PWRGD_VMGT
I_VMGT
PWRGD_VCC_INT
I_VCC_INT
INH_VCC_INT
POWER_STATUS
CLK0P
CLK0N
CLK1P
CLK1N
CLK2P
CLK2N
DIOP[0:9],DION[0:9]
DIO[0:11]
D_SCRUB[0:31]
SCRUB_CONTROL
CAN_US
FX3RESET#
FX3INT#
FX3PCLK
FX3DQ[0:31]
FX3CTL[0:12]
FX3UARTtx
FX3UARTrx
RXRDY_2
TXRDY_2
DIN2P[0:9],DIN2N[0:9]
TxDATAVALID2
DOUT2P[0:9],DOUT2N[0:9]
RxDATAVALID2
DCLK2P[0:1],DCLK2N[0:1]
GBTx2RESETB
TXRDY_1
DIN1P[0:9],DIN1N[0:9]
TxDATAVALID1
DCLK1P[0:1],DCLK1N[0:1]
GBTx1RESETB
RXRDY
TXRDY
DINP[0:9],DINN[0:9]
TxDATAVALID
DOUTP[0:9],DOUTN[0:9]
RxDATAVALID
DCLKP[0:1],DCLKN[0:1]
CLOCKDESP[1:6],CLOCKDESN[1:6]
GBTxRESETB
SCRESET_B
GBTx2
GBTx1
GBTx
CLOCKDES0N
CLOCKDES0P
TDO_GBTx
RXRDY
TXRDY
DINP[0:9],DINN[0:9]
TxDATAVALID
DOUTP[0:9],DOUTN[0:9]
RxDATAVALID
DCLKP[0:1],DCLKN[0:1]
CLOCKDESP[1:6],CLOCKDESN[1:6]
RESETB
jTAG2
TDi_GBTx
REFCLKN
REFCLKP
RDP,RDN
TDP,TDN
LDSCL,LDSDA
SCL,SDA
DiffInPpullUp
SCCLKP,SCCLKN
SCOUTP,SCOUTN
SCINP,SCINN
DiffInNpullDown
SCINP2
SCINN2
SCINP1
SCINN1
VDD
R4 1k
R3 1k
J48
J47
J32
TDOGBTX2
TD_GBTx_1
TDOFX3
VTRx2
VTRx1
VTTx
TxDisable
RD2P,RD2N
TD2P,TD2N
TD1P,TD1N
SCL0,SDA0
SCL1,SDA1
SCL2,SDA2
SCL3,SDA3
SCL4,SDA4
SCL5,SDA5
SCA
SCCLKP,SCCLKN
SCOUTP,SCOUTN
SCINP,SCINN
GPIO[0:5]
SCePORTAUX
SCSCL,SCSDA
SCRESET_B
SCjTAG
SCRUB_CONTROL
POWER_STATUS
jTAG
OK no.
APPROVALS
DRAWN BY
IGF
CHECKED
DATE
24/02/2017:14:41
TIME:
Scientific Instrumentation
SIZE
D
RUv1
TOP
VER
REV
SHEET 1 of 40
H=8ND; V=4LA

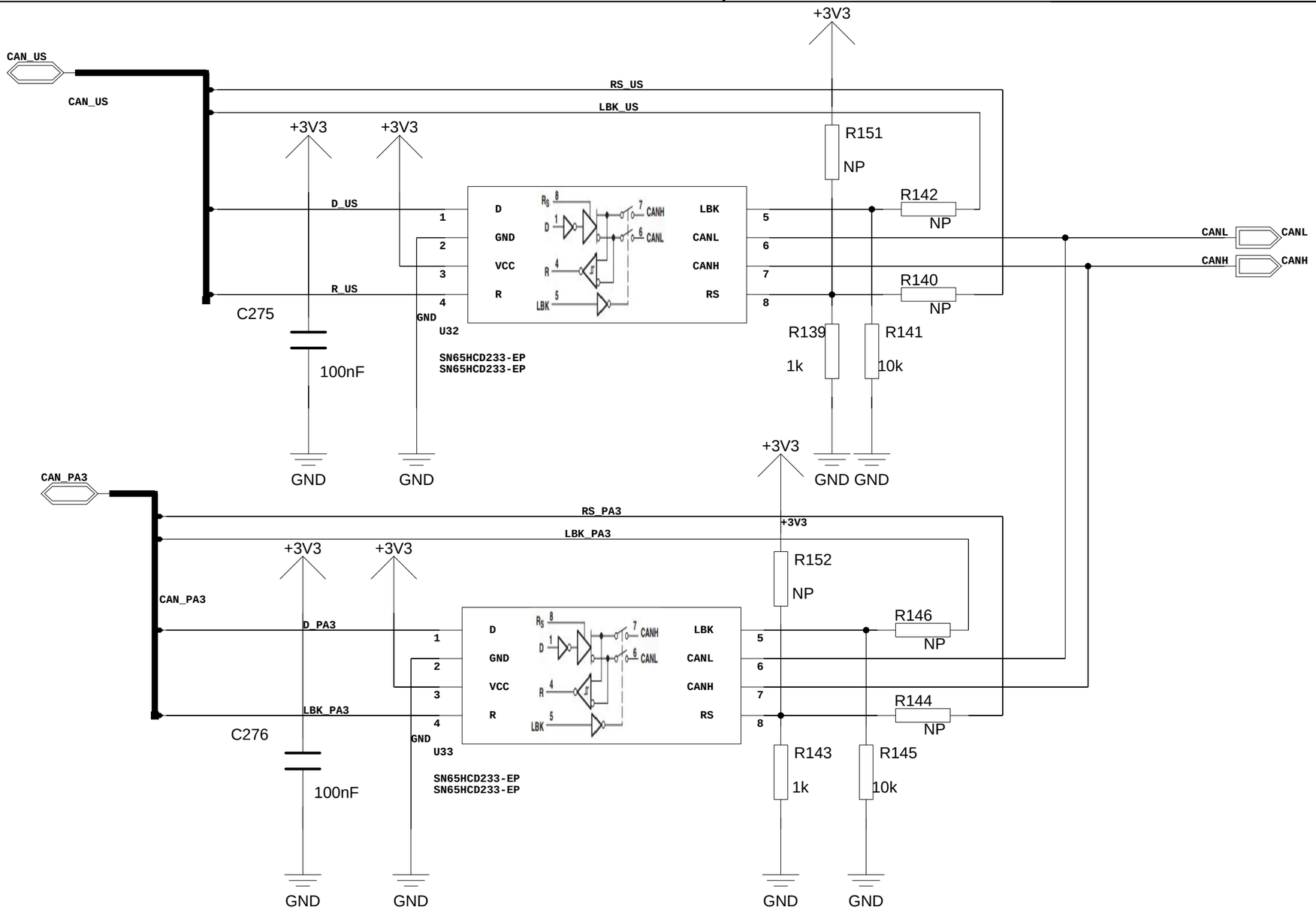

OK no.		Scientific Instrumentation	
APPROVALS			
DRAWN BY	IGF	CAN	
CHECKED		SIZE B	VER / REV
DATE 10/02/2017:15:31			
TIME:		SHEET 1 of 40	

H=2LA; V=2LA

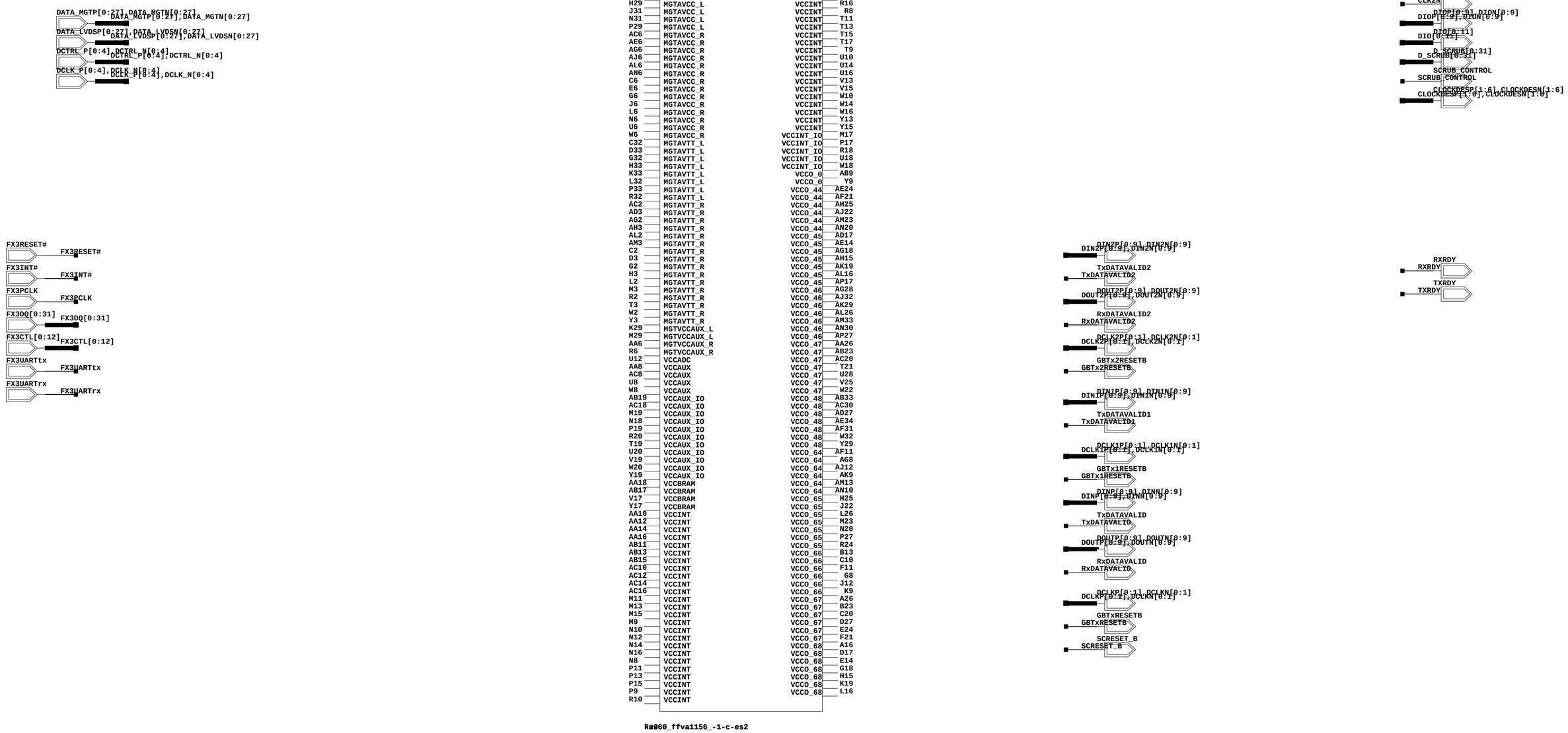

OK no.		Utrecht University Scientific Instrumentation	
APPROVALS			
DRAWN BY J Wisman	IGF	FPGA	
CHECKED		SIZE C	1 / VER / REV
DATE 24/02/2017:14:21			
TIME:		SHEET 3 of 40	

DWG. NO. | SH. | REV

H=4ND; V=4LA

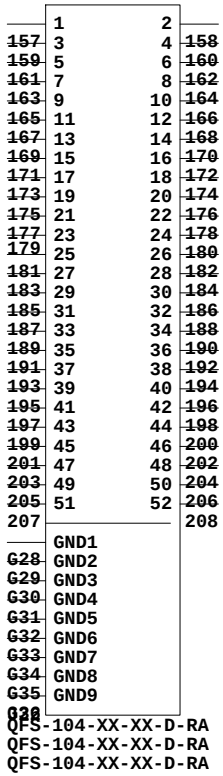

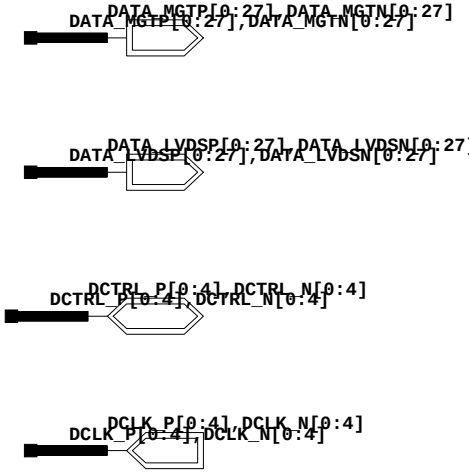

OK no.		Utrecht University Scientific Instrumentation	
APPROVALS			
DRAWN BY J Wisman	IGF		
CHECKED		SIZE A	1 FireFly	VER	REV
DATE 10/02/2017:15:31			
TIME:		SHEET 4 of 40	

H=2LA; V=2LA

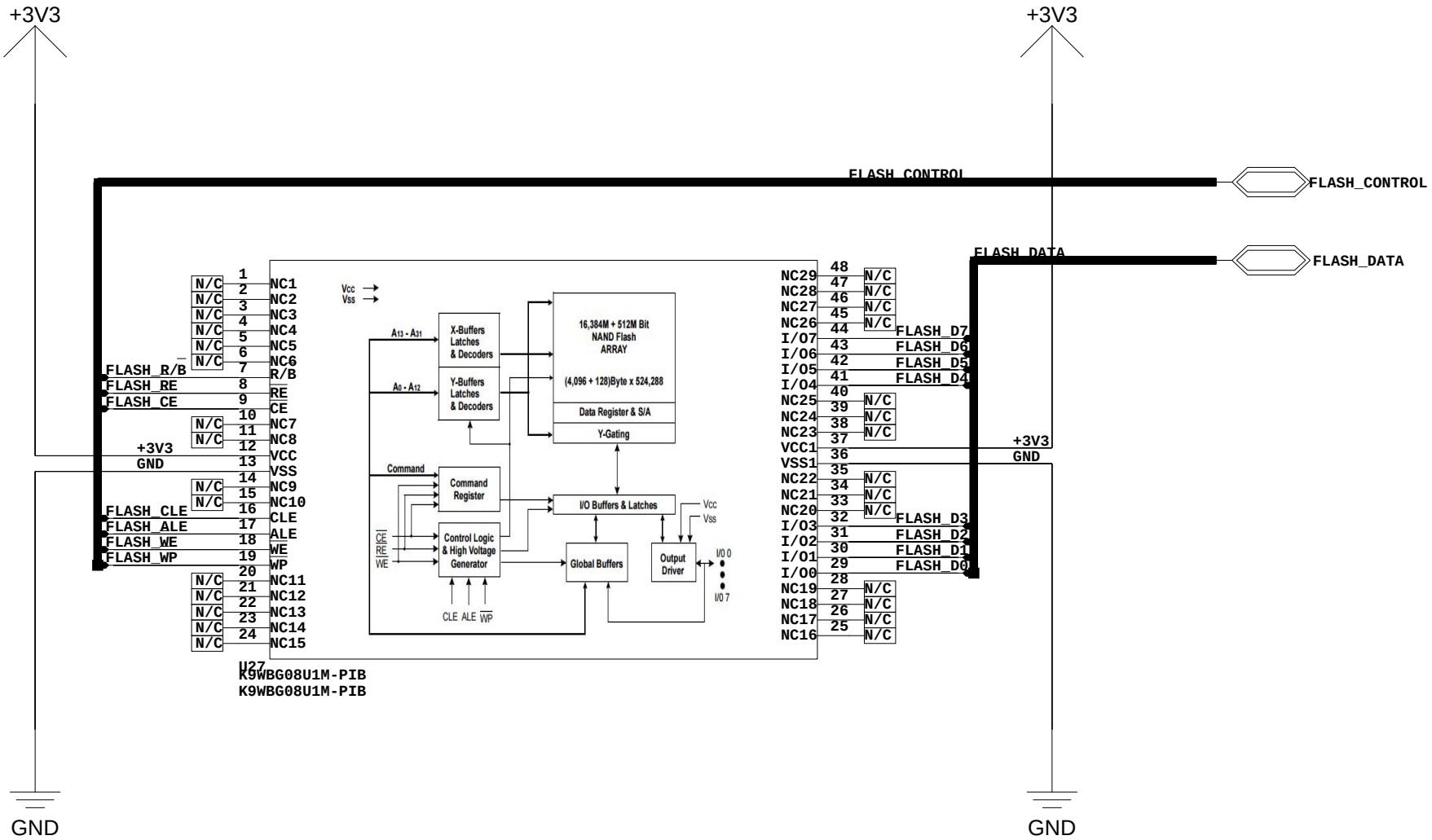

OK no.		Utrecht University	
APPROVALS		Scientific Instrumentation	
DRAWN BY	IGF		
CHECKED		SIZE A	1 Flash_PROM	VER	REV
DATE 10/02/2017:15:31			
TIME:		SHEET 5 of 40	

H=2LA; V=2LA

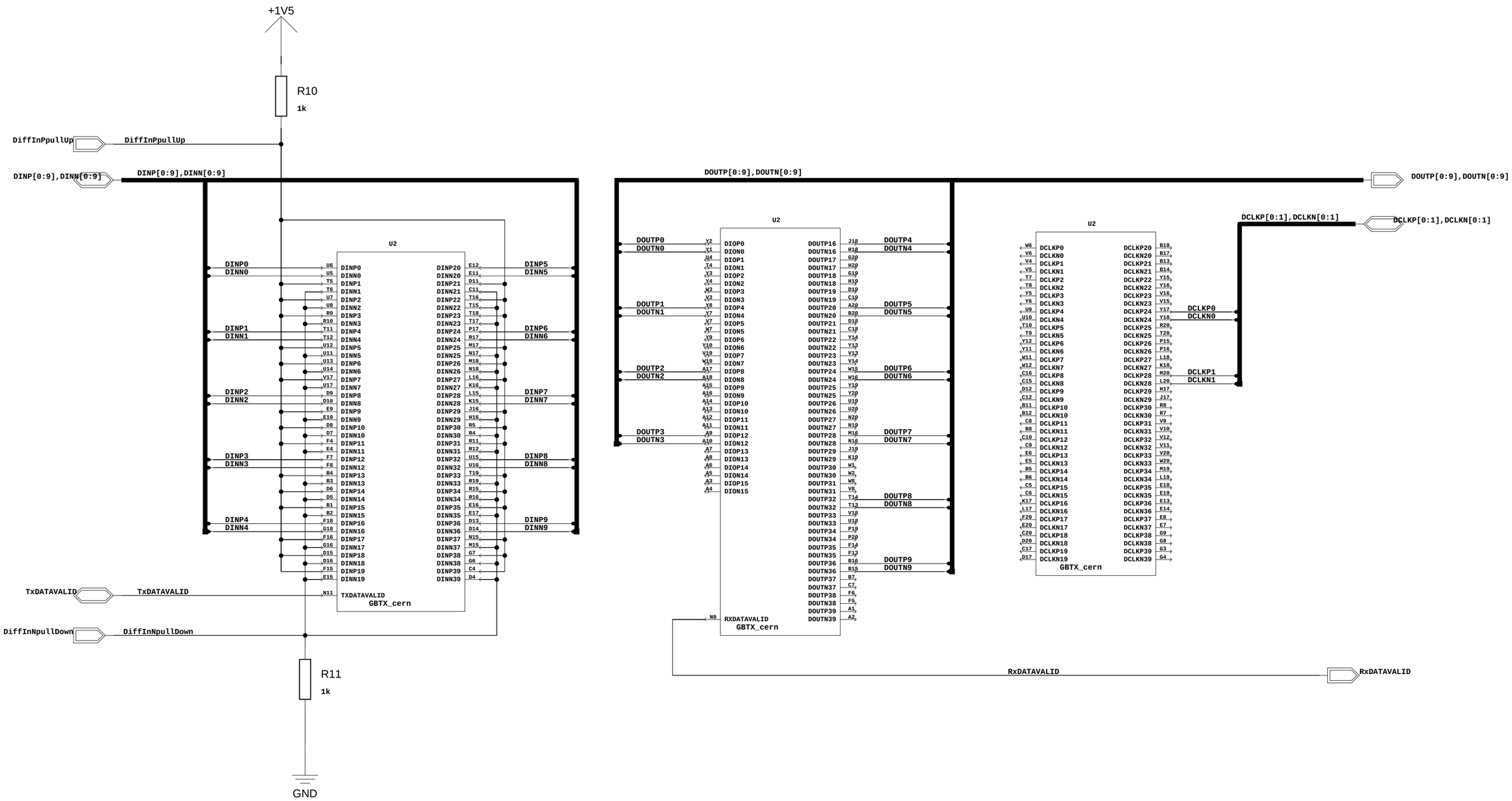

OK no.		Utrecht University Scientific Instrumentation	
APPROVALS			
DRAWN BY J Wisman	IGF		
CHECKED M Rossewij		SIZE C — GBTx GBTx IO	VER 1 / REV 0
DATE 24/02/2017:09:16			
TIME:		SHEET 6 of 40	

H=4ND; V=4LA

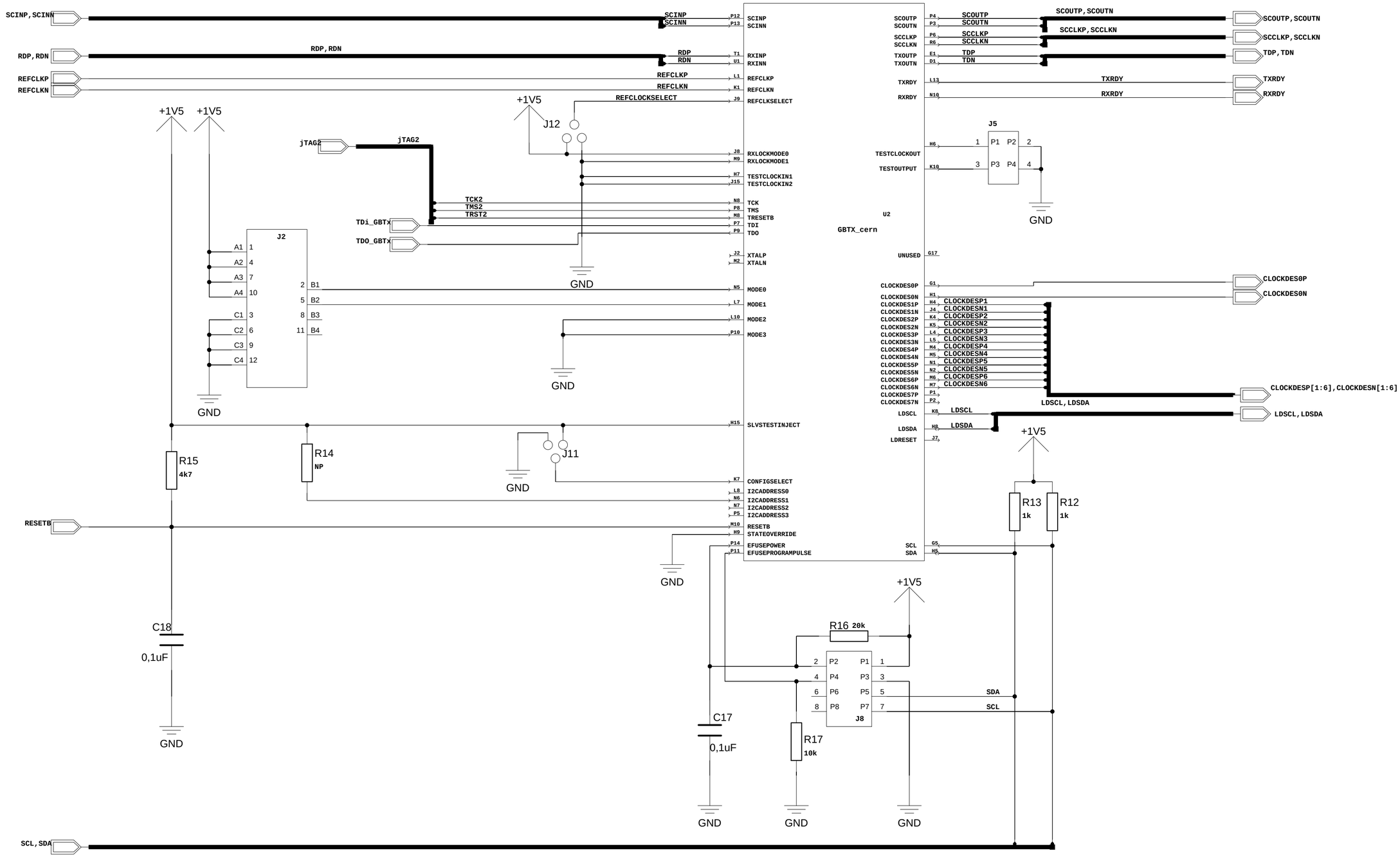

OK no.		
APPROVALS		
DRAWN BY J Wisman	IGF	
CHECKED M Rossewij		
DATE 23/02/2017:16:54		
TIME:		

Utrecht University
Scientific Instrumentation

SIZE		VER	REV
C	GBTx — GBTx Control	1	0

SHEET 7 of 40

H=4ND; V=4LA

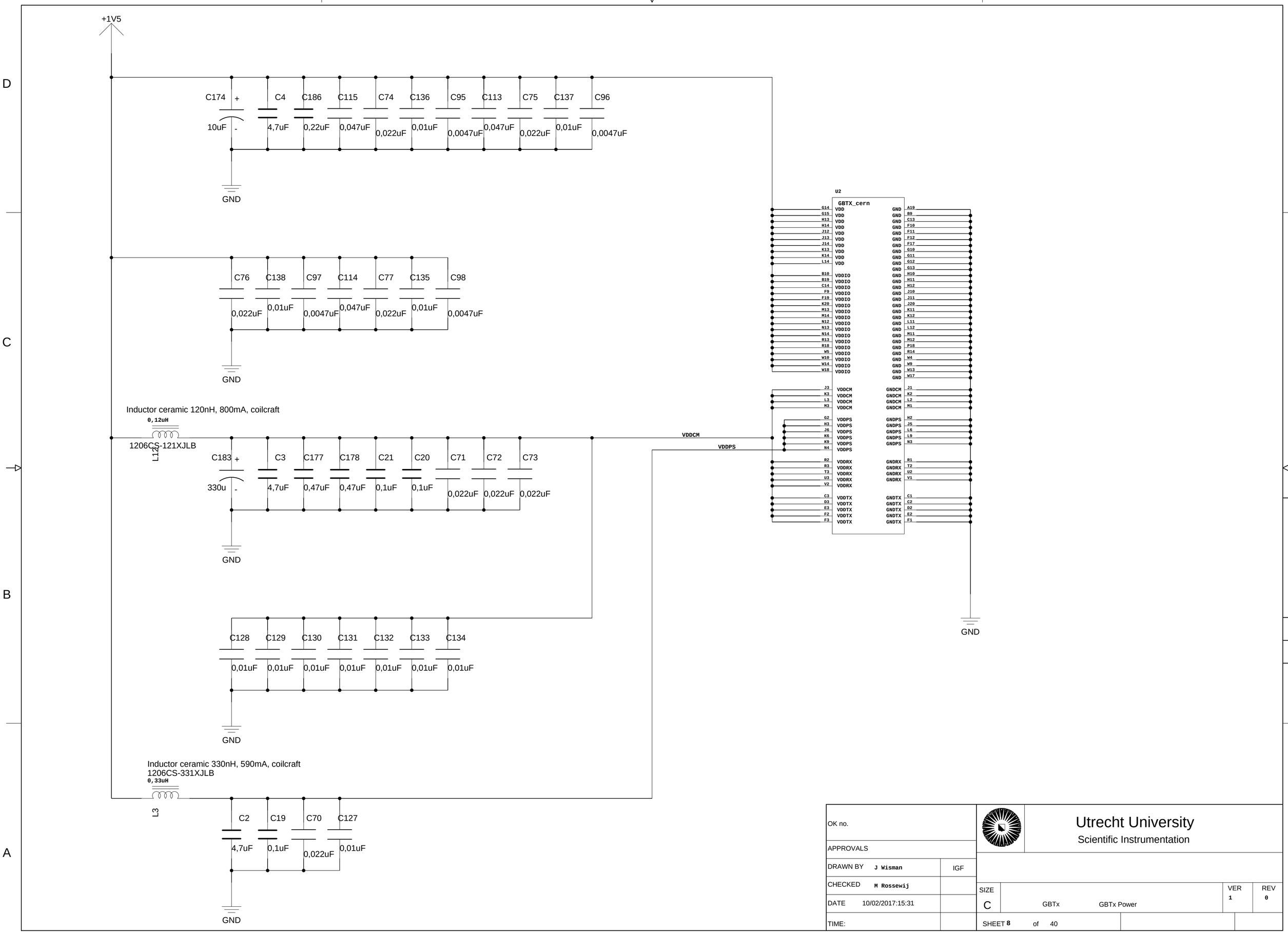

OK no.		Utrecht University Scientific Instrumentation
APPROVALS		
DRAWN BY J Wisman	IGF	
CHECKED M Rossewij		SIZE C · GBTx · GBTx Power · VER 1 · REV 0
DATE 10/02/2017:15:31		
TIME:		SHEET 8 of 40

H=4ND; V=4LA

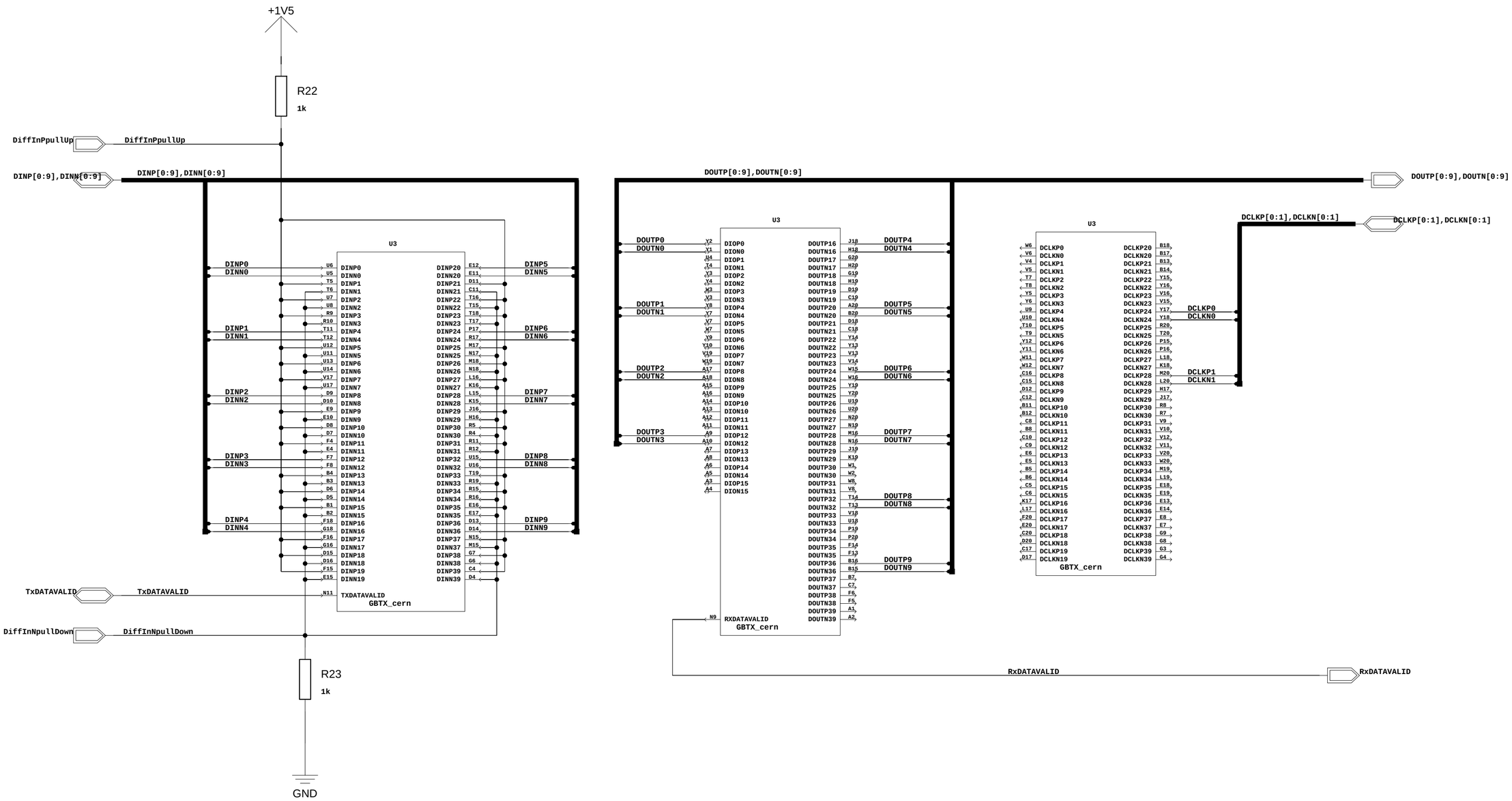

OK no.		Utrecht University Scientific Instrumentation	
APPROVALS			
DRAWN BY J Wisman	IGF		
CHECKED M Rossewij		SIZE C — GBTx GBTx IO	VER 1 / REV 0
DATE 24/02/2017:09:16			
TIME:		SHEET 9 of 40	

H=4ND; V=4LA

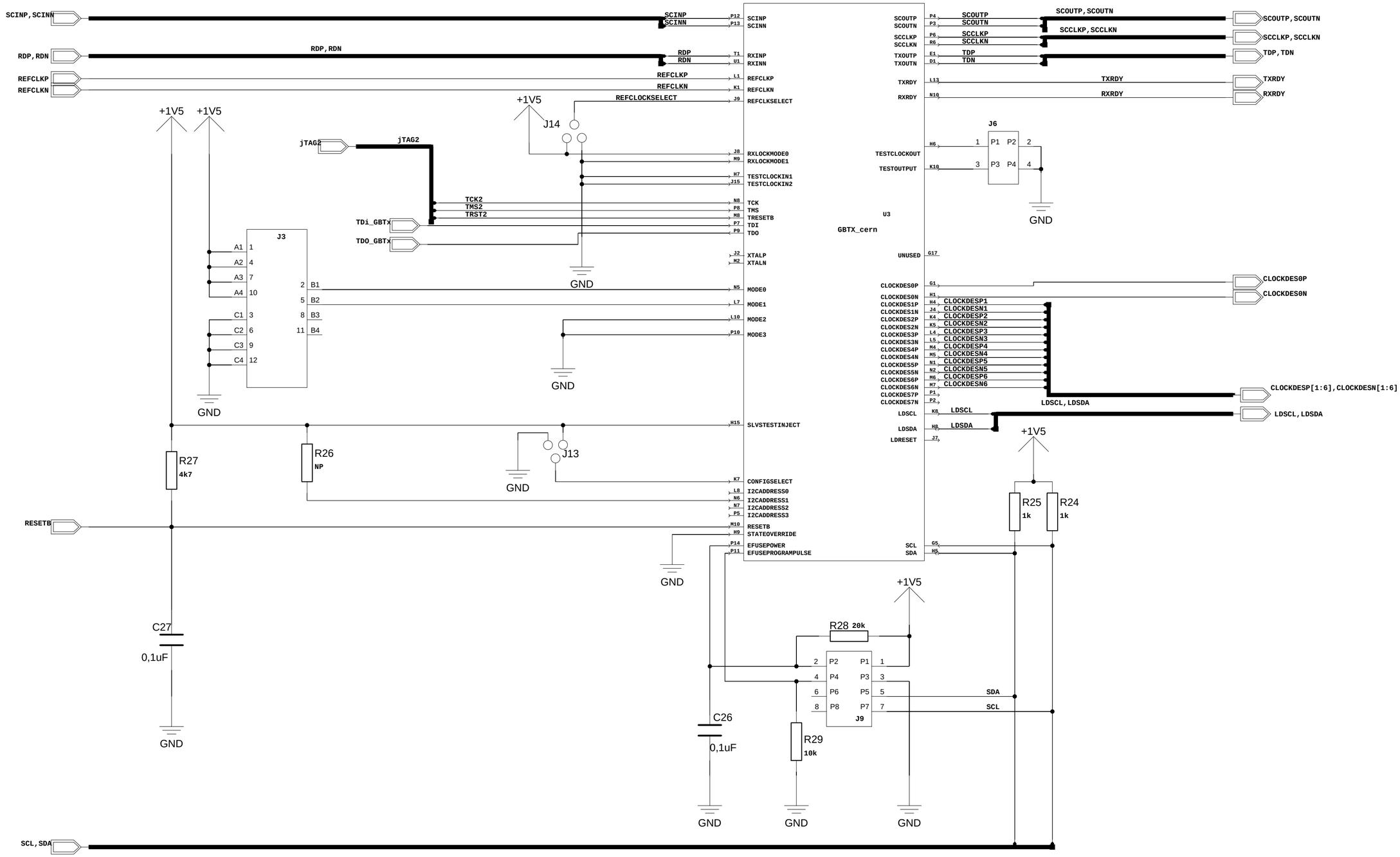

OK no.		Utrecht University Scientific Instrumentation	
APPROVALS			
DRAWN BY J Wisman	IGF		
CHECKED M Rossewij		SIZE C	GBTx GBTx Control VER 1 REV 0
DATE 23/02/2017:16:54			
TIME:		SHEET 10 of 40	

H=4ND; V=4LA

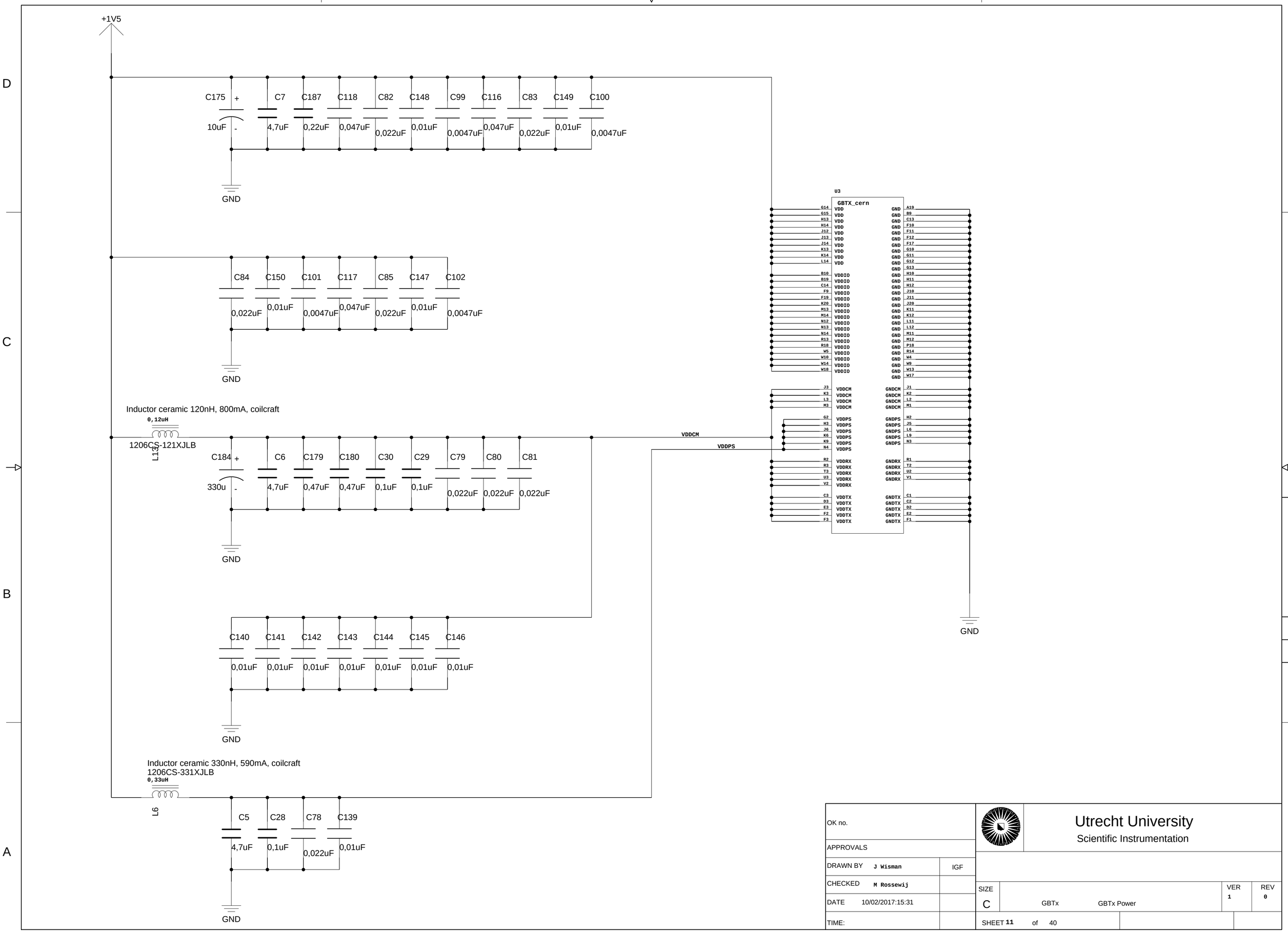

OK no.		Utrecht University Scientific Instrumentation
APPROVALS		
DRAWN BY J Wisman	IGF	
CHECKED M Rossewij		SIZE C · GBTx · GBTx Power · VER 1 · REV 0
DATE 10/02/2017:15:31		
TIME:		SHEET 11 of 40

H=4ND; V=4LA

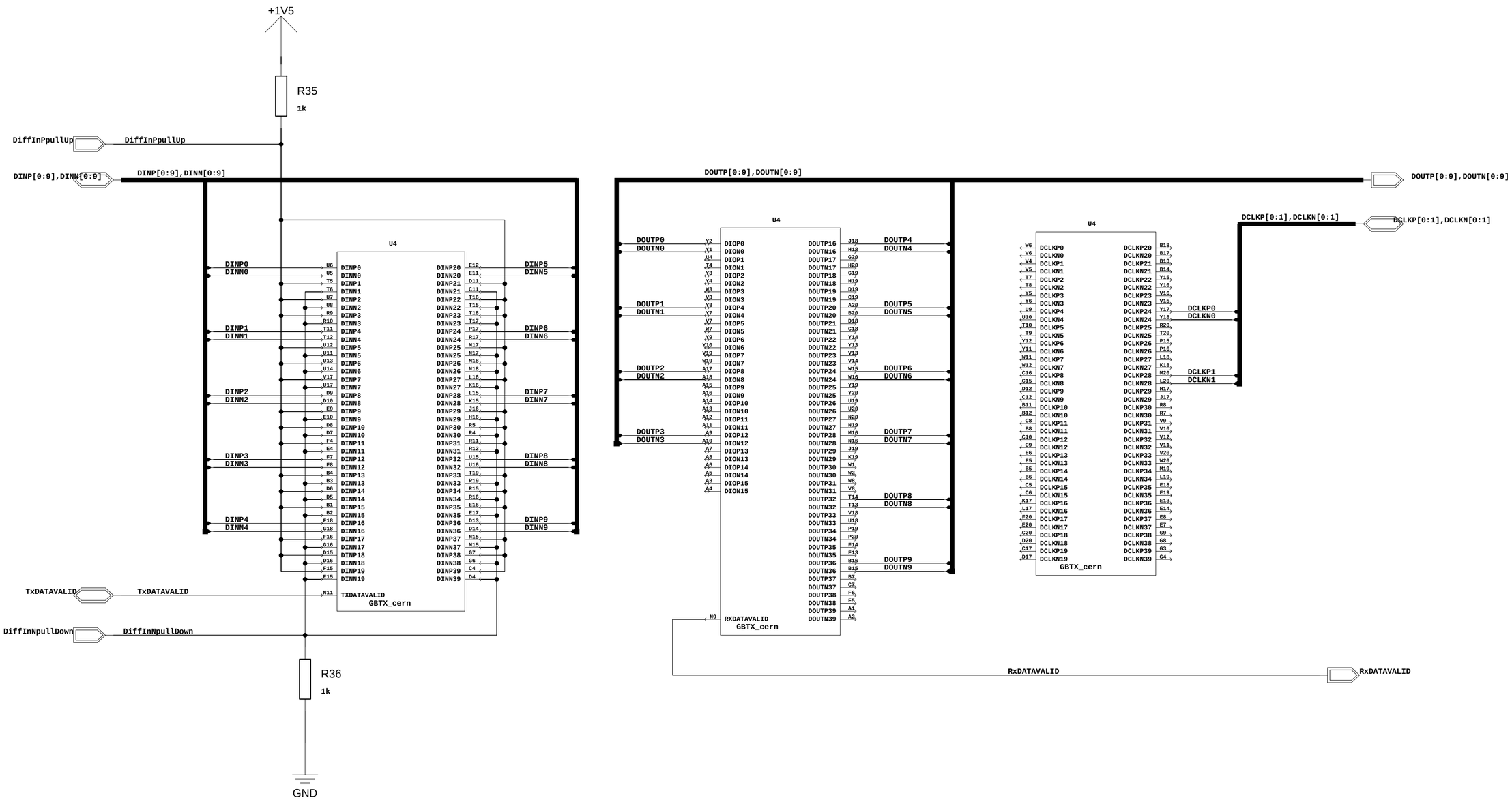

OK no.		Utrecht University Scientific Instrumentation	
APPROVALS			
DRAWN BY J Wisman	IGF		
CHECKED M Rossewij		SIZE C — GBTx GBTx IO	VER 1 / REV 0
DATE 24/02/2017:09:16			
TIME:		SHEET 12 of 40	

H=4ND; V=4LA

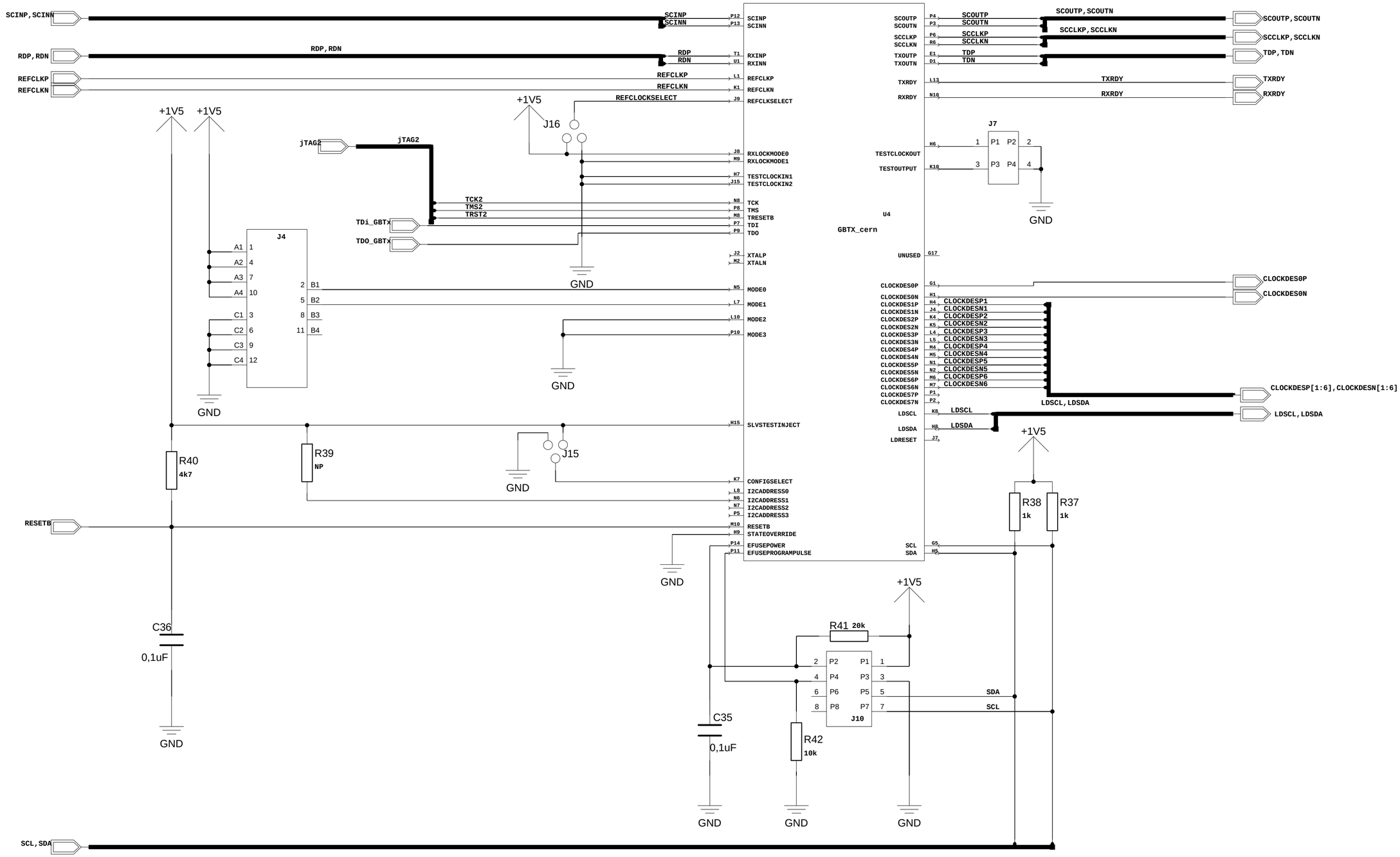

OK no.		Utrecht University Scientific Instrumentation	
APPROVALS			
DRAWN BY J Wisman	IGF		
CHECKED M Rossewij		SIZE C	GBTx GBTx Control	VER 1	REV 0
DATE 23/02/2017:16:54			
TIME:		SHEET 13 of 40	

H=4ND; V=4LA

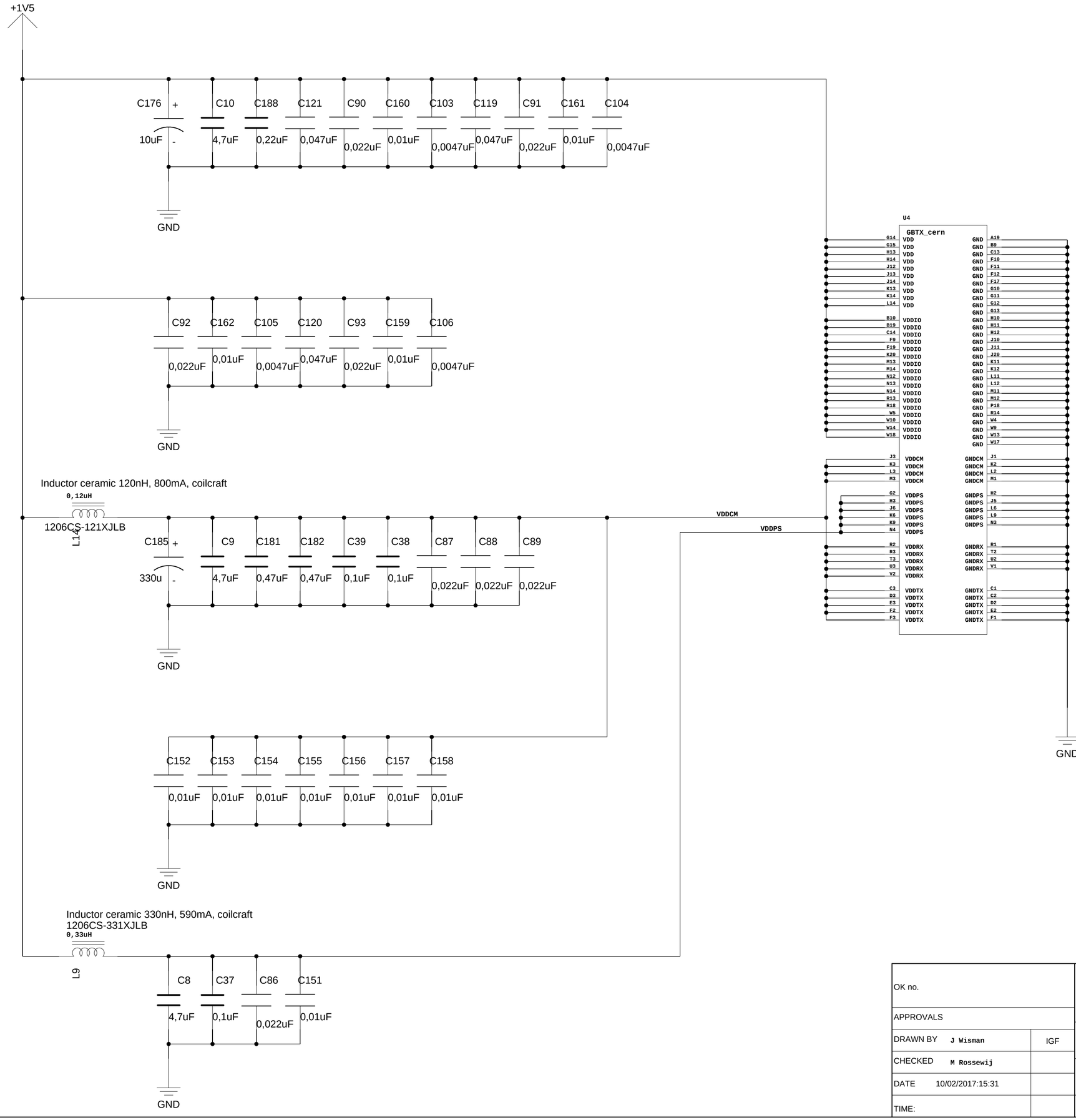

OK no.		Utrecht University Scientific Instrumentation	
APPROVALS			
DRAWN BY J Wisman	IGF		
CHECKED M Rossewij		SIZE C GBTx GBTx Power	VER 1 / REV 0
DATE 10/02/2017:15:31			
TIME:		SHEET 14 of 40	

H=4ND; V=4LA

PROASIC3_Bank0

D5	GAA0__IO00NDB0V0	IO10NDB0V1	E9
D6	GAA1__IO00PDB0V0	IO10PDB0V1	D9
D7	GAB0__IO01NDB0V0	IO11NDB0V1	B8
E7	GAB1__IO01PDB0V0	IO11PDB0V1	A8
F8	GAC0__IO02NDB0V0	IO12NDB0V2	E10
F9	GAC1__IO02PDB0V0	IO12PDB0V2	D10
B4	IO03NDB0V0	IO13NDB0V2	H11
B5	IO03PDB0V0	IO13PDB0V2	G11
C6	IO04NDB0V0	IO14NDB0V2	C10
C7	IO04PDB0V0	IO14PDB0V2	B10
E8	IO05NDB0V0	IO15NDB0V2	F10
D8	IO05PDB0V0	IO15PDB0V2	F11
A4	IO06NDB0V1	IO16NDB0V2	D11
A5	IO06PDB0V1	IO16PDB0V2	E11
B6	IO07NDB0V1	IO17NDB0V2	B9
B7	IO07PDB0V1	IO17PDB0V2	A9
A6	IO08NDB0V1	IO18NDB0V2	A10
A7	IO08PDB0V1	IO18PDB0V2	A11
G9	IO09NDB0V1	IO19NDB0V2	C11
G10	IO09PDB0V1	IO19PDB0V2	B11

a3pe600l_fbga484_STD
a3pe600l_fbga484_STD

PROASIC3_Bank1

D17	GBA0__IO35NDB1V1	IO25NDB1V0	F13
D18	GBA1__IO35PDB1V1	IO25PDB1V0	G13
E16	GBB0__IO34NDB1V1	IO26NDB1V0	B13
D16	GBB1__IO34PDB1V1	IO26PDB1V0	A13
F15	GBC0__IO33NDB1V1	IO27NDB1V0	G14
E15	GBC1__IO33PDB1V1	IO27PDB1V0	F14
E12	IO20NDB1V0	IO28NDB1V1	D14
F12	IO20PDB1V0	IO28PDB1V1	D15
H12	IO21NDB1V0	IO29NDB1V1	A14
G12	IO21PDB1V0	IO29PDB1V1	A15
B12	IO22NDB1V0	IO30NDB1V1	B16
A12	IO22PDB1V0	IO30PDB1V1	B17
D12	IO23NDB1V0	IO31NDB1V1	A16
D13	IO23PDB1V0	IO31PDB1V1	A17
E13	IO24NDB1V0	IO32NDB1V1	A18
E14	IO24PDB1V0	IO32PDB1V1	B18

a3pe600l_fbga484_STD

PROASIC3_Bank2

E18	GBA2__IO36PDB2V0	IO42NDB2V0	E19
G17	GBB2__IO37PDB2V0	IO42PDB2V0	F19
H16	GBC2__IO38PDB2V0	IO43NDB2V0	G21
L19	GCB0__IO51NPB2V1	IO43PDB2V0	G20
L16	GCB1__IO51PPB2V1	IO44NDB2V1	K17
L15	GCC0__IO50NPB2V1	IO44PDB2V1	K18
K16	GCC1__IO50PPB2V1	IO45NPB2V1	K20
F18	IO36NDB2V0	IO45PPB2V1	J19
H17	IO37NDB2V0	IO46NDB2V1	K22
J16	IO38NDB2V0	IO46PDB2V1	J22
G19	IO39NDB2V0	IO47NDB2V1	L21
G18	IO39PDB2V0	IO47PDB2V1	L22
J17	IO40NDB2V0	IO48NDB2V1	K21
J18	IO40PDB2V0	IO48PDB2V1	J21
H18	IO41NDB2V0	IO49NPB2V1	K19
H19	IO41PDB2V0	IO49PPB2V1	L20

a3pe600l_fbga484_STD

PROASIC3_Bank3

L17	GCA0__IO52NPB3V0	IO57NPB3V0	N17
M16	GCA1__IO52PPB3V0	IO57PPB3V0	N19
M19	GCA2__IO53PDB3V0	IO58NDB3V0	P22
M15	GCB2__IO54PPB3V0	IO58PDB3V0	N22
M17	GCC2__IO55PPB3V0	IO59NDB3V0	R21
U19	GDA0__IO67NDB3V1	IO59PDB3V0	P21
T19	GDA1__IO67PDB3V1	IO60NDB3V1	P17
P16	GDB0__IO66NPB3V1	IO60PDB3V1	P18
R17	GDB1__IO66PPB3V1	IO61NDB3V1	R19
T18	GDC0__IO65NDB3V1	IO61PDB3V1	P19
R18	GDC1__IO65PDB3V1	IO62NDB3V1	T22
M20	IO53NDB3V0	IO62PDB3V1	R22
N16	IO54NPB3V0	IO63NDB3V1	V22
N18	IO55NPB3V0	IO63PDB3V1	U22
N21	IO56NDB3V0	IO64NDB3V1	U21
M21	IO56PDB3V0	IO64PDB3V1	T21

a3pe600l_fbga484_STD

PROASIC3_Bank4

W17	GDA2__IO68PDB4V0	IO75NDB4V1	AB12
V16	GDB2__IO69PDB4V0	IO75PDB4V1	AB13
W15	GDC2__IO70PDB4V0	IO76NDB4V1	U13
W16	IO68NDB4V0	IO76PDB4V1	U14
V15	IO69NDB4V0	IO77NDB4V1	V13
W14	IO70NDB4V0	IO77PDB4V1	V14
AA16	IO71NDB4V0	IO78NPB4V1	Y12
AA17	IO71PDB4V0	IO78PPB4V1	AA11
AB14	IO72NDB4V0	IO79NDB4V1	AA12
AB15	IO72PDB4V0	IO79PDB4V1	AA13
AB16	IO73NDB4V0	IO80NDB4V1	W11
AB17	IO73PDB4V0	IO80PDB4V1	Y11
T13	IO74NDB4V1	IO81NDB4V1	W12
T14	IO74PDB4V1	IO81PDB4V1	W13

a3pe600l_fbga484_STD

PROASIC3_Bank5

W6	FF__GEB2__IO100PDB5V2	IO89PDB5V0	Y10
T9	GEA2__IO101PPB5V2	IO90NDB5V1	T11
V7	GEC2__IO99PDB5V2	IO90PDB5V1	U11
W5	IO100NDB5V2	IO91NDB5V1	V9
U8	IO101NPB5V2	IO91PDB5V1	V10
T12	IO82NDB5V0	IO92NDB5V1	T10
U12	IO82PDB5V0	IO92PDB5V1	U10
V11	IO83NDB5V0	IO93NDB5V1	AB6
V12	IO83PDB5V0	IO93PDB5V1	AB7
R11	IO84NDB5V0	IO94NDB5V1	Y6
R12	IO84PDB5V0	IO94PDB5V1	Y7
AA10	IO85NDB5V0	IO95NPB5V1	V8
AA9	IO85PDB5V0	IO95PPB5V1	U9
AA7	IO86NDB5V0	IO96NDB5V2	AA5
AA8	IO86PDB5V0	IO96PDB5V2	AA6
AB8	IO87NDB5V0	IO97NDB5V2	AB4
AB9	IO87PDB5V0	IO97PDB5V2	AB5
W8	IO88NDB5V0	IO98NDB5V2	Y4
W9	IO88PDB5V0	IO98PDB5V2	AA4
W10	IO89NDB5V0	IO99NDB5V2	W7

a3pe600l_fbga484_STD

PROASIC3_Bank6

V5	GEA0__IO102NDB6V0	IO108NDB6V0	P7
V4	GEA1__IO102PDB6V0	IO108PDB6V0	P6
U5	GEB0__IO103NDB6V0	IO109NPB6V0	R4
U4	GEB1__IO103PDB6V0	IO109PPB6V0	P5
R7	GEC0__IO104NPB6V0	IO110NDB6V0	T2
T6	GEC1__IO104PPB6V0	IO110PDB6V0	R2
L5	GFA0__IO118NDB6V1	IO111NDB6V1	N2
M5	GFA1__IO118PDB6V1	IO111PDB6V1	P2
M4	GFA2__IO117PDB6V1	IO112NDB6V1	N7
M8	GFB2__IO116PDB6V1	IO112PDB6V1	N6
N4	GFC2__IO115PPB6V1	IO113NPB6V1	P4
T5	IO105NDB6V0	IO113PPB6V1	N5
T4	IO105PDB6V0	IO114NPB6V1	M2
R5	IO106NDB6V0	IO114PPB6V1	N1
R6	IO106PDB6V0	IO115NPB6V1	P3
U3	IO107NDB6V0	IO116NDB6V1	M7
U2	IO107PDB6V0	IO117NDB6V1	M3

a3pe600l_fbga484_STD

PROASIC3_Bank7

E5	GAA2__IO134PDB7V1	IO125PDB7V0	J5
E4	GAB2__IO133PDB7V1	IO126NDB7V0	K6
G6	GAC2__IO132PDB7V1	IO126PDB7V0	J6
L4	GFB0__IO119NPB7V0	IO127NDB7V1	G1
L6	GFB1__IO119PPB7V0	IO127PDB7V1	G2
L8	GFC0__IO120NPB7V0	IO128NDB7V1	H4
K7	GFC1__IO120PPB7V0	IO128PDB7V1	G4
K1	IO121NDB7V0	IO129NDB7V1	H5
K2	IO121PDB7V0	IO129PDB7V1	G5
L3	IO122NDB7V0	IO130NDB7V1	J7
L2	IO122PDB7V0	IO130PDB7V1	H7
J1	IO123NDB7V0	IO131NDB7V1	F2
J2	IO123PDB7V0	IO131PDB7V1	F3
K4	IO124NDB7V0	IO132NDB7V1	H6
J4	IO124PDB7V0	IO133NDB7V1	F4
K5	IO125NDB7V0	IO134NDB7V1	F5

a3pe600l_fbga484_STD

PROASIC3_Ground

A1	GND	GND	M11
A2	GND	GND	M12
A21	GND	GND	M13
A22	GND	GND	N10
AA1	GND	GND	N11
AA22	GND	GND	N12
AB1	GND	GND	N13
AB2	GND	GND	P14
AB21	GND	GND	P9
AB22	GND	GND	V20
B1	GND	GND	V3
B22	GND	GND	W19
C18	GND	GND	W4
C5	GND	GND	Y18
D19	GND	GND	Y5
D4	GND	GNDQ	E17
E20	GND	GNDQ	E6
E3	GND	GNDQ	G15
J14	GND	GNDQ	G8
J9	GND	GNDQ	T15
K10	GND	GNDQ	T8
K11	GND	GNDQ	V18
K12	GND	GNDQ	V6
K13	GND	VCOMPLA	G7
L10	GND	VCOMPLB	G16
L11	GND	VCOMPLC	L18
L12	GND	VCOMPLD	T16
L13	GND	VCOMPLE	T7
M10	GND	VCOMPLF	L7

a3pe600l_fbga484_STD

PROASIC3_Power

C14	VCC	VCCIB2	J15
C15	VCC	VCCIB2	K15
C8	VCC	VCCIB3	AA21
C9	VCC	VCCIB3	N15
H20	VCC	VCCIB3	P15
H3	VCC	VCCIB3	Y22
J10	VCC	VCCIB4	AB20
J11	VCC	VCCIB4	R13
J12	VCC	VCCIB4	R14
J13	VCC	VCCIB5	AB3
K14	VCC	VCCIB5	R10
K9	VCC	VCCIB5	R9
L14	VCC	VCCIB6	AA2
L9	VCC	VCCIB6	N8
M14	VCC	VCCIB6	P8
M9	VCC	VCCIB6	Y1
N14	VCC	VCCIB7	B2
N9	VCC	VCCIB7	C1
P10	VCC	VCCIB7	J8
P11	VCC	VCCIB7	K8
P12	VCC	VCCPLA	F7
P13	VCC	VCCPLB	F16
R20	VCC	VCCPLC	M18
R3	VCC	VCCPLD	R16
Y14	VCC	VCCPLE	U7
Y15	VCC	VCCPLF	M6
Y8	VCC	VJTAG	T17
Y9	VCC	VMV0	H8
A3	VCCIB0	VMV1	H15
H10	VCCIB0	VMV2	F17
H9	VCCIB0	VMV3	R15
A20	VCCIB1	VMV4	U15
H13	VCCIB1	VMV5	R8
H14	VCCIB1	VMV6	U6
B21	VCCIB2	VMV7	F6
C22	VCCIB2	VPUMP	U17

a3pe600l_fbga484_STD

PROASIC3_NoBank

A19	NotBonded	NotBonded	G22
AA14	NotBonded	NotBonded	G3
AA15	NotBonded	NotBonded	H1
AA18	NotBonded	NotBonded	H2
AA19	NotBonded	NotBonded	H21
AA20	NotBonded	NotBonded	H22
AA3	NotBonded	NotBonded	J20
AB10	NotBonded	NotBonded	J3
AB11	NotBonded	NotBonded	K3
AB18	NotBonded	NotBonded	L1
AB19	NotBonded	NotBonded	M1
B14	NotBonded	NotBonded	M22
B15	NotBonded	NotBonded	N20
B19	NotBonded	NotBonded	N3
B20	NotBonded	NotBonded	P1
B3	NotBonded	NotBonded	P20
C12	NotBonded	NotBonded	R1
C13	NotBonded	NotBonded	T1
C16	NotBonded	NotBonded	T20
C17	NotBonded	NotBonded	T3
C19	NotBonded	NotBonded	U1
C2	NotBonded	NotBonded	U20
C20	NotBonded	NotBonded	V1
C21	NotBonded	NotBonded	V2
C3	NotBonded	NotBonded	V21
C4	NotBonded	NotBonded	W1
D1	NotBonded	NotBonded	W2
D2	NotBonded	NotBonded	W20
D20	NotBonded	NotBonded	W21
D21	NotBonded	NotBonded	W22
D22	NotBonded	NotBonded	W3
D3	NotBonded	NotBonded	Y13
E1	NotBonded	NotBonded	Y16
E2	NotBonded	NotBonded	Y17
E21	NotBonded	NotBonded	Y19
E22	NotBonded	NotBonded	Y2
F1	NotBonded	NotBonded	Y20
F20	NotBonded	NotBonded	Y21
F21	NotBonded	NotBonded	Y3
F22	NotBonded		

a3pe600l_fbga484_STD

FLASH_CONTROL — FLASH_CONTROL

FLASH_DATA — FLASH_DATA

OK no.		Scientific Instrumentation	
APPROVALS			
DRAWN BY	IGF	PA3	
CHECKED		SIZE B	VER / REV
DATE 24/02/2017:14:24			
TIME:		SHEET 1 of 40	

H=2LA; V=2LA

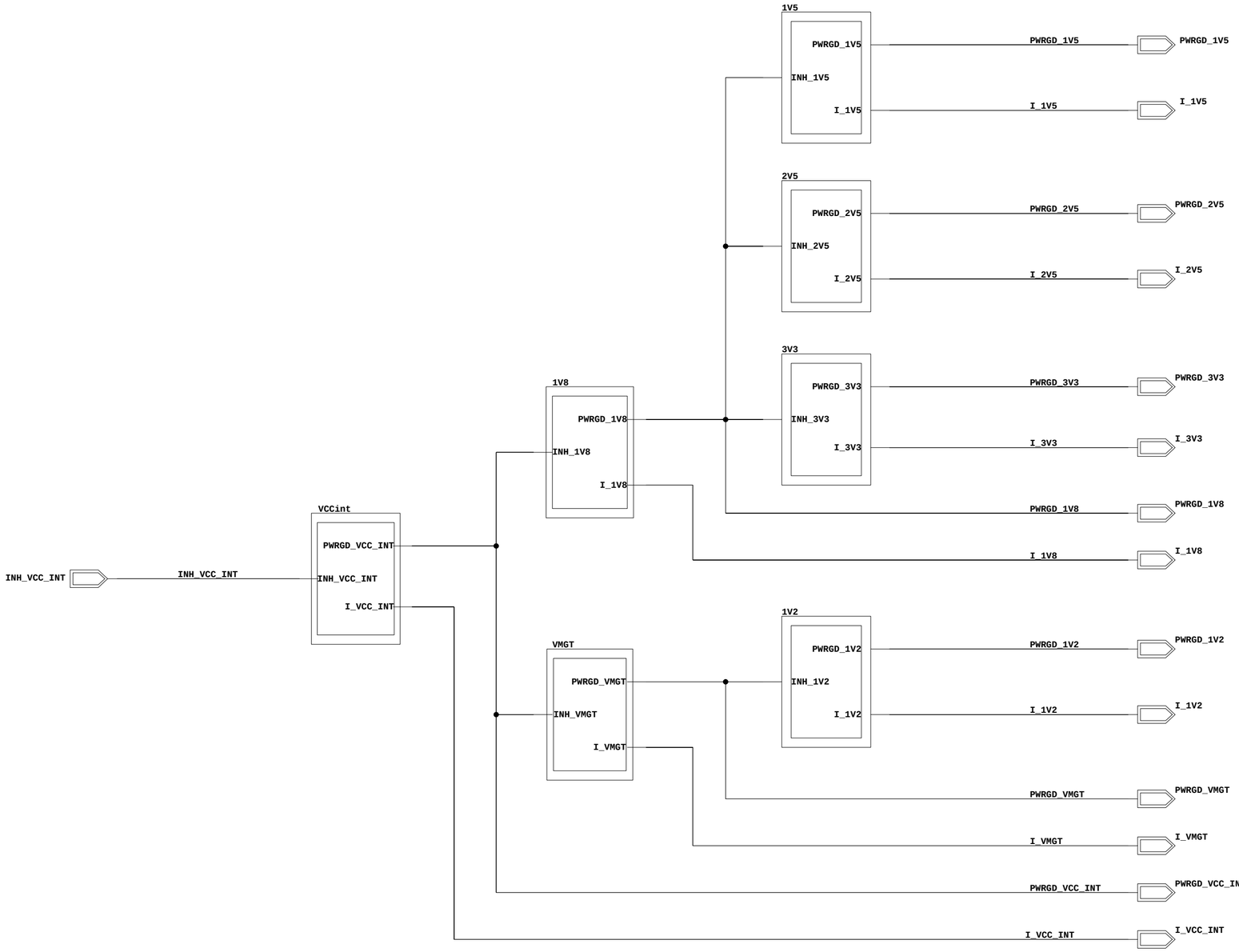

OK no.		Utrecht University Scientific Instrumentation	
APPROVALS			
DRAWN BY J Wisman	IGF	POWER	
CHECKED		SIZE C	1	VER	REV
DATE 10/02/2017:15:31			
TIME:		SHEET 16 of 40	

H=4ND; V=4LA

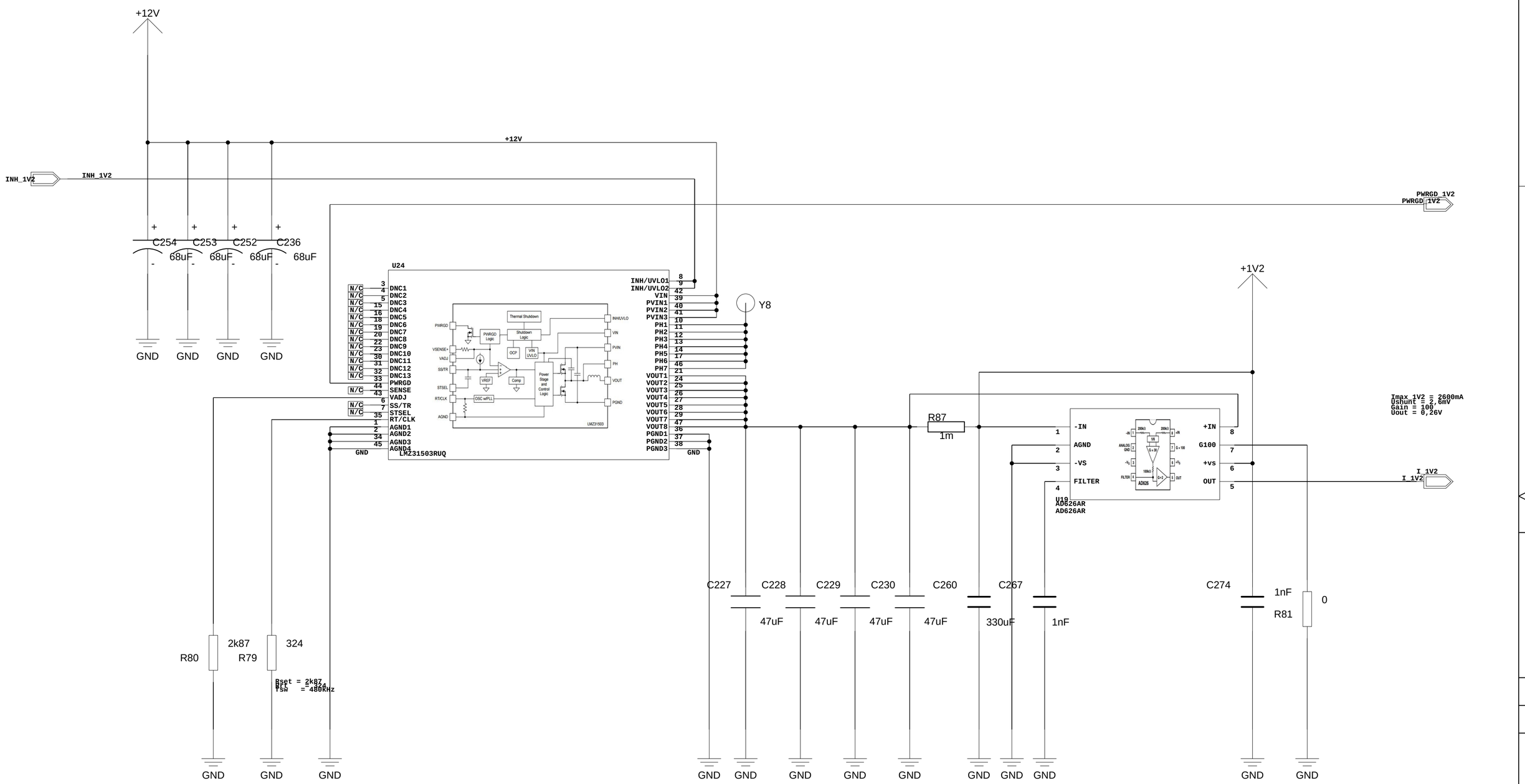

OK no.		Utrecht University Scientific Instrumentation	
APPROVALS		1V2	
DRAWN BY	IGF		
CHECKED		SIZE C	1	VER	REV
DATE 10/02/2017:15:31			
TIME:		SHEET 17 of 40	

H=4ND; V=4LA

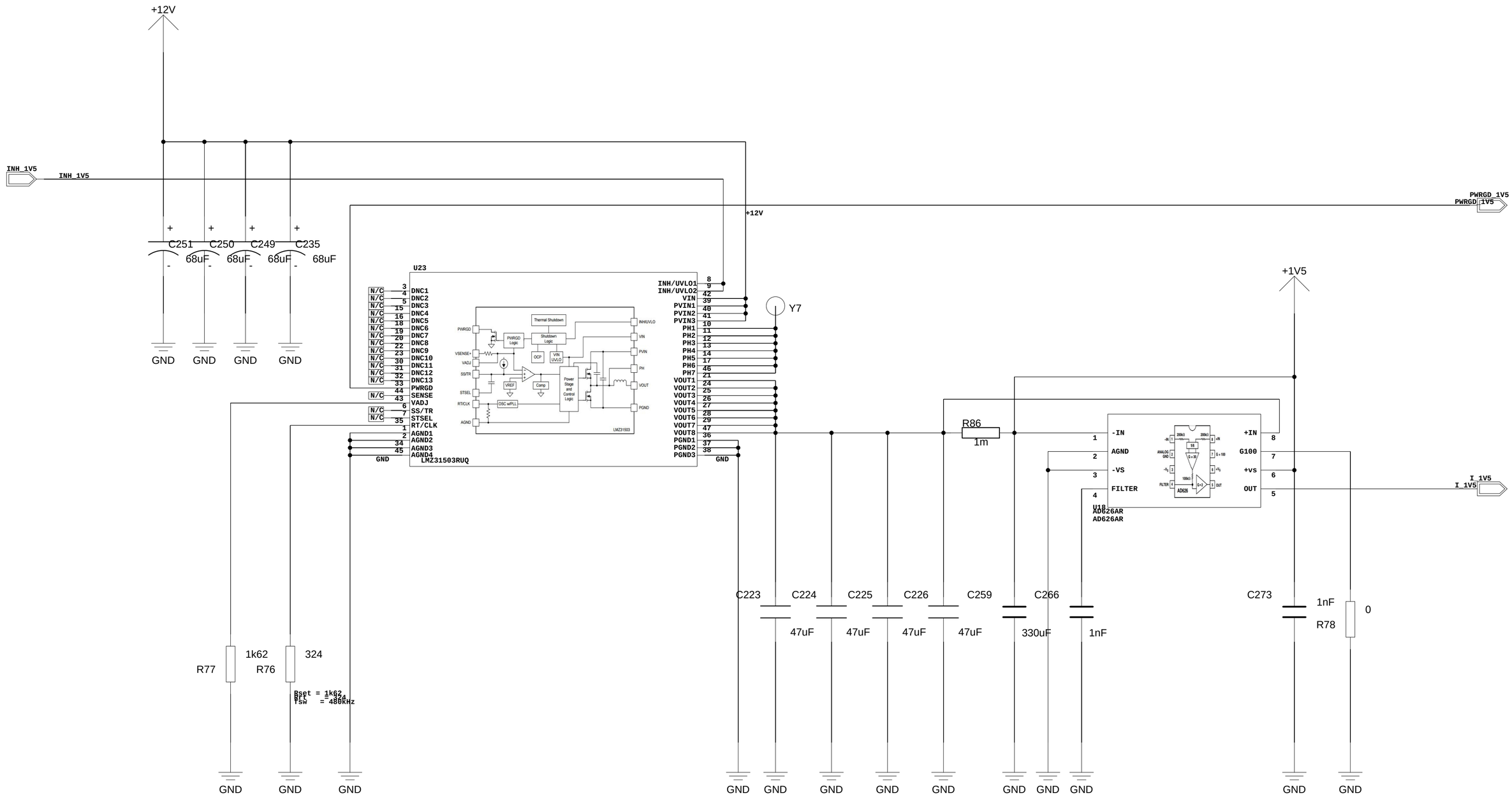

OK no.		Utrecht University Scientific Instrumentation	
APPROVALS			
DRAWN BY J Wisman	IGF	1V5	
CHECKED		SIZE C	1 / VER / REV
DATE 10/02/2017:15:31		SHEET 18 of 40	
TIME:			

H=4ND; V=4LA

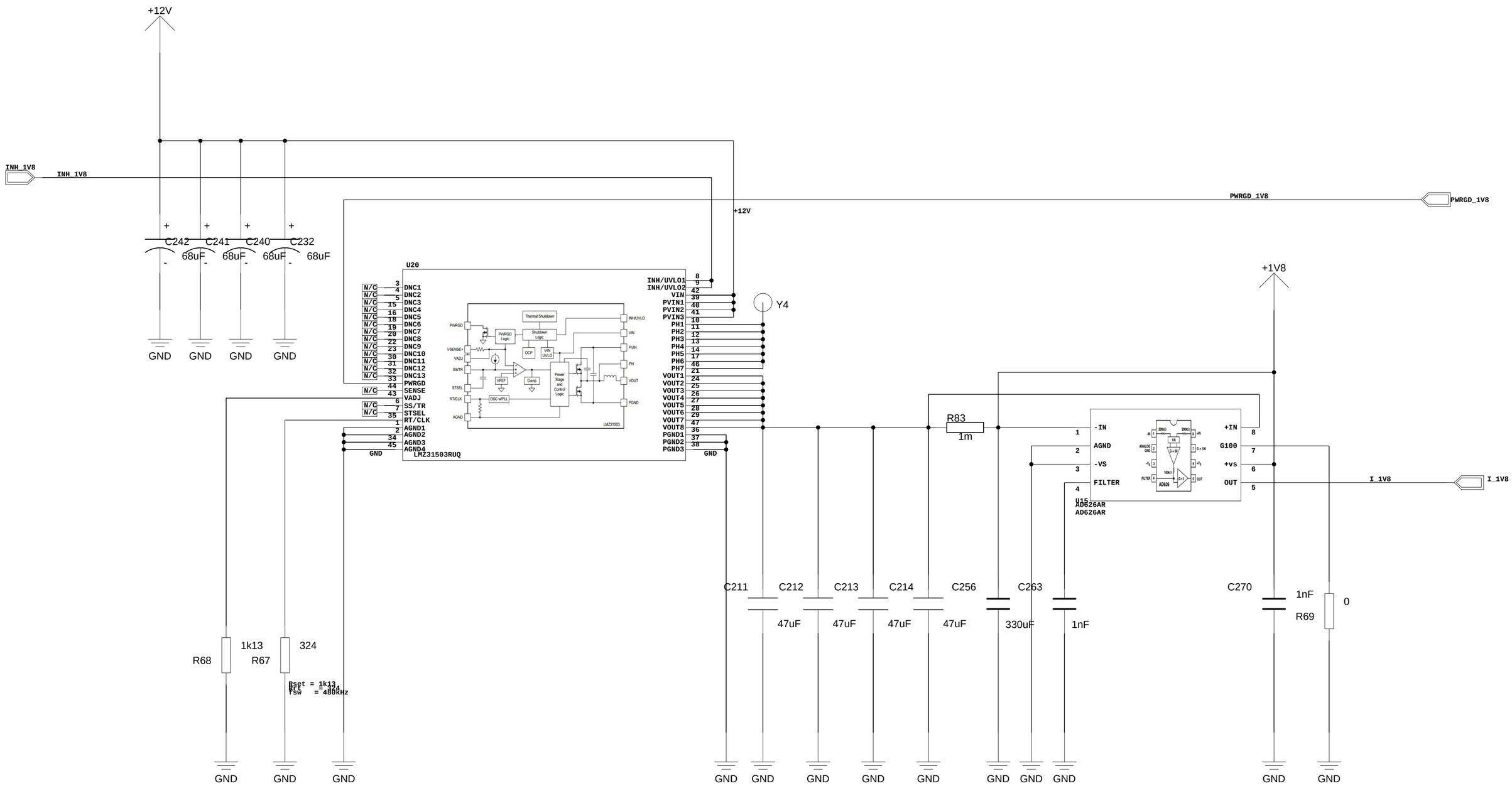

OK no.		Utrecht University Scientific Instrumentation
APPROVALS		
DRAWN BY	IGF	1V8
CHECKED		SIZE C · 1 · VER · REV
DATE 10/02/2017:15:31		
TIME:		SHEET 19 of 40

H=4ND; V=4LA

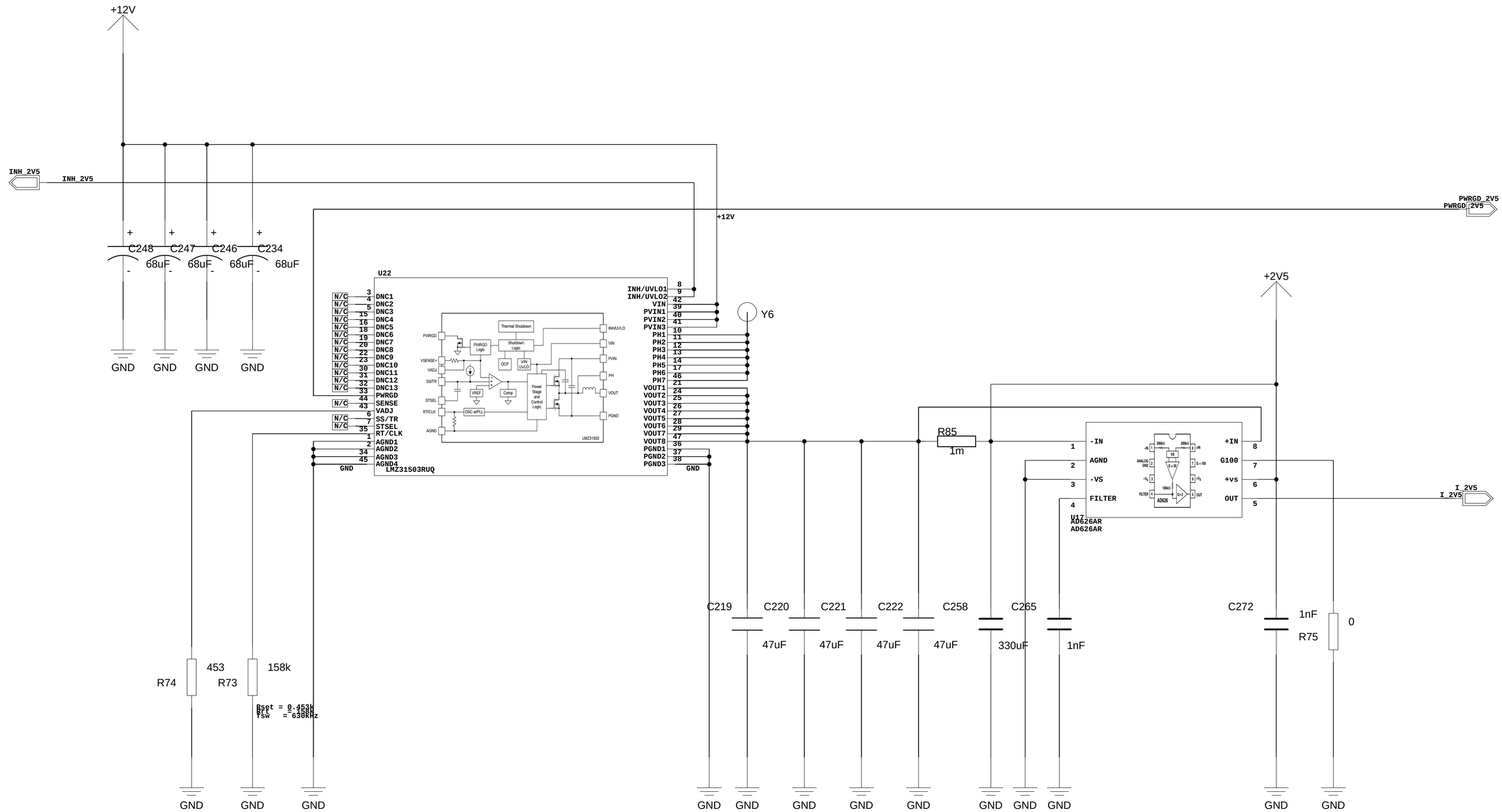

OK no.		Utrecht University Scientific Instrumentation	
APPROVALS			
DRAWN BY	IGF	2V5	
CHECKED		SIZE C	VER / REV
DATE 10/02/2017:15:31		1	
TIME:		SHEET 20 of 40	

H=4ND; V=4LA

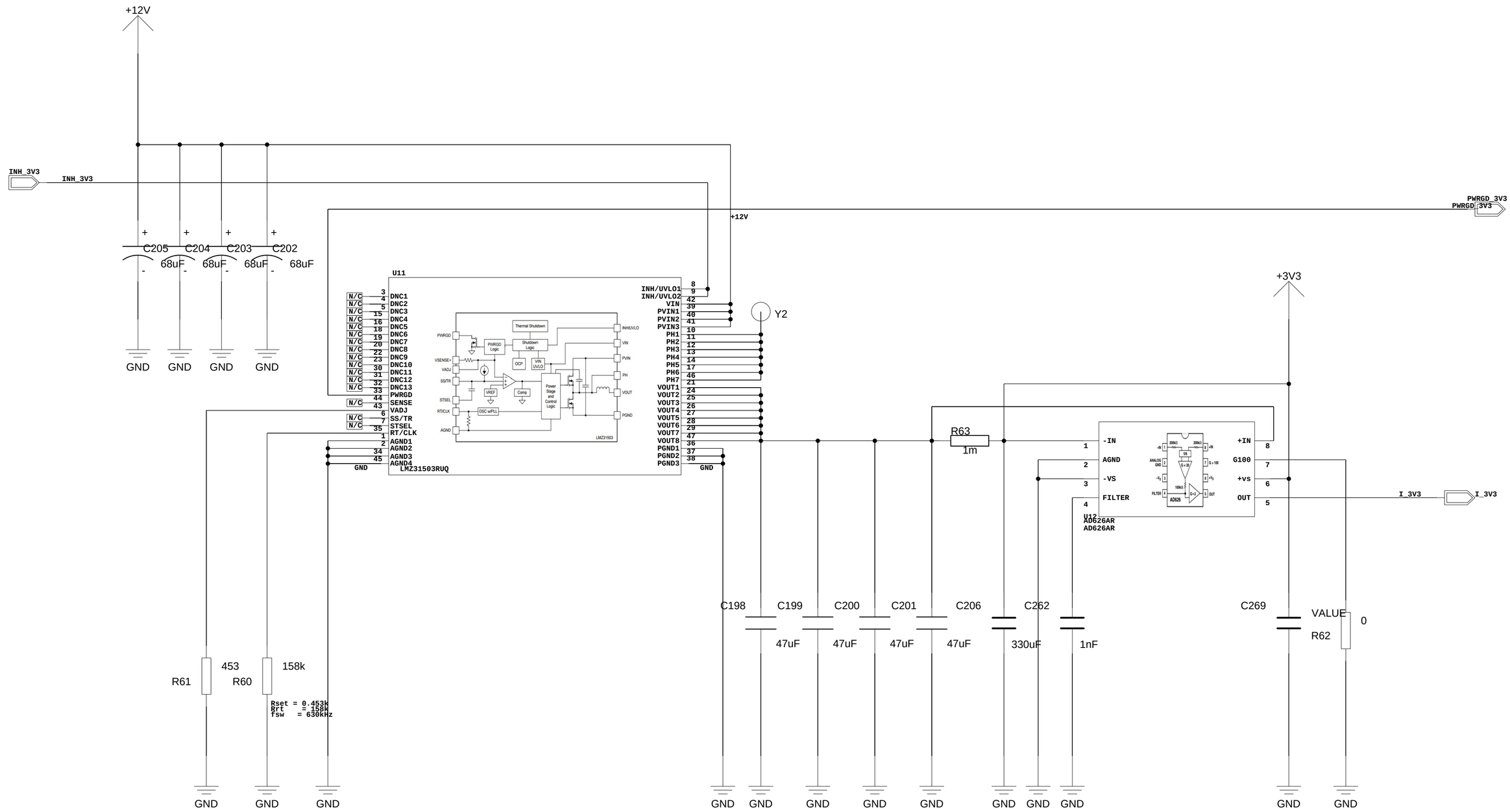

OK no.		Utrecht University Scientific Instrumentation
APPROVALS		
DRAWN BY	IGF	3V3
CHECKED		SIZE C · 1 · VER · REV
DATE 10/02/2017:15:31		
TIME:		SHEET 21 of 40

H=4ND; V=4LA

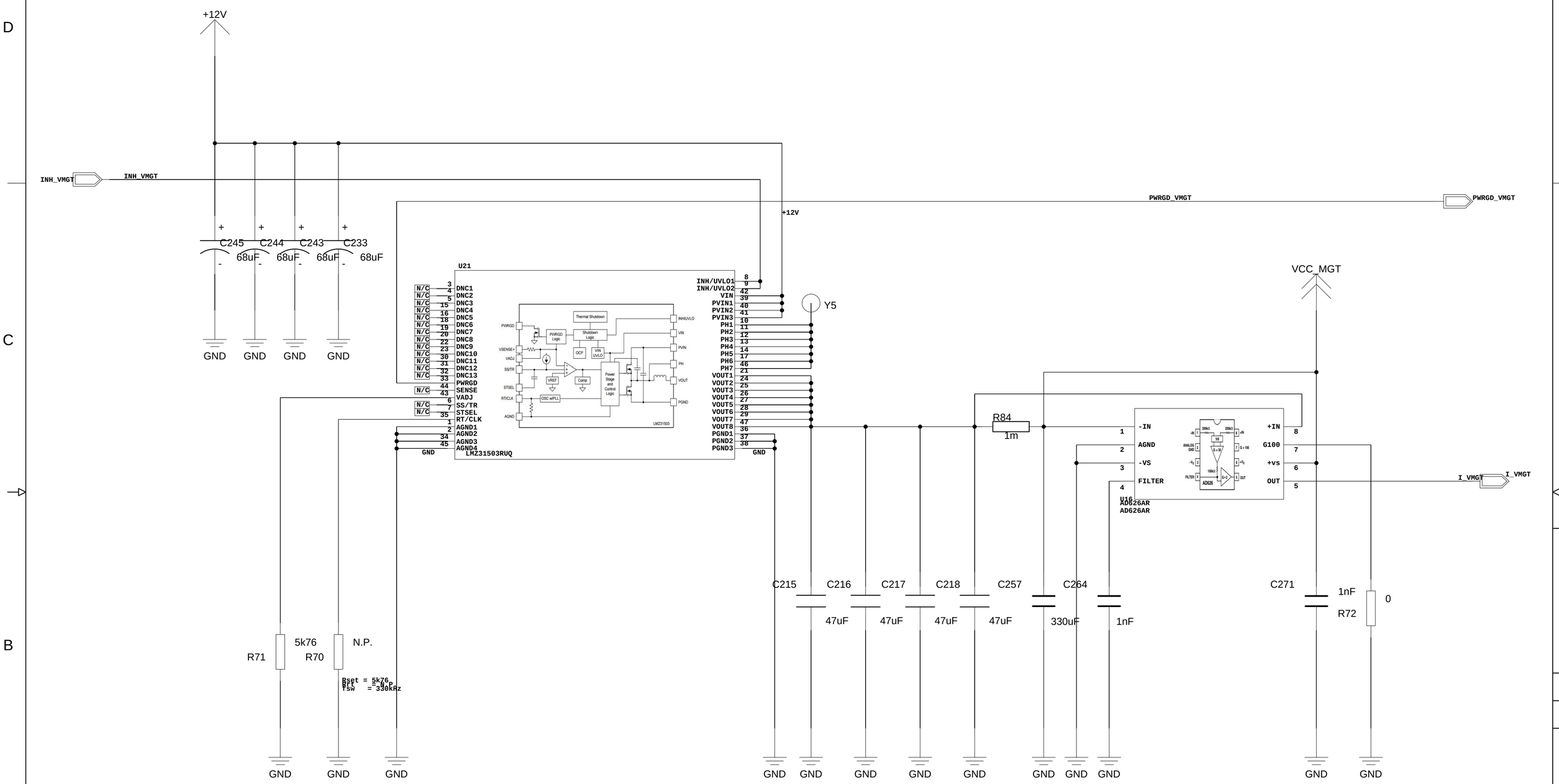

OK no.		Utrecht University Scientific Instrumentation
APPROVALS		VMGT
DRAWN BY	IGF	
CHECKED		SIZE C · 1 · VER · REV
DATE 10/02/2017:15:31		
TIME:		SHEET 23 of 40

H=4ND; V=4LA

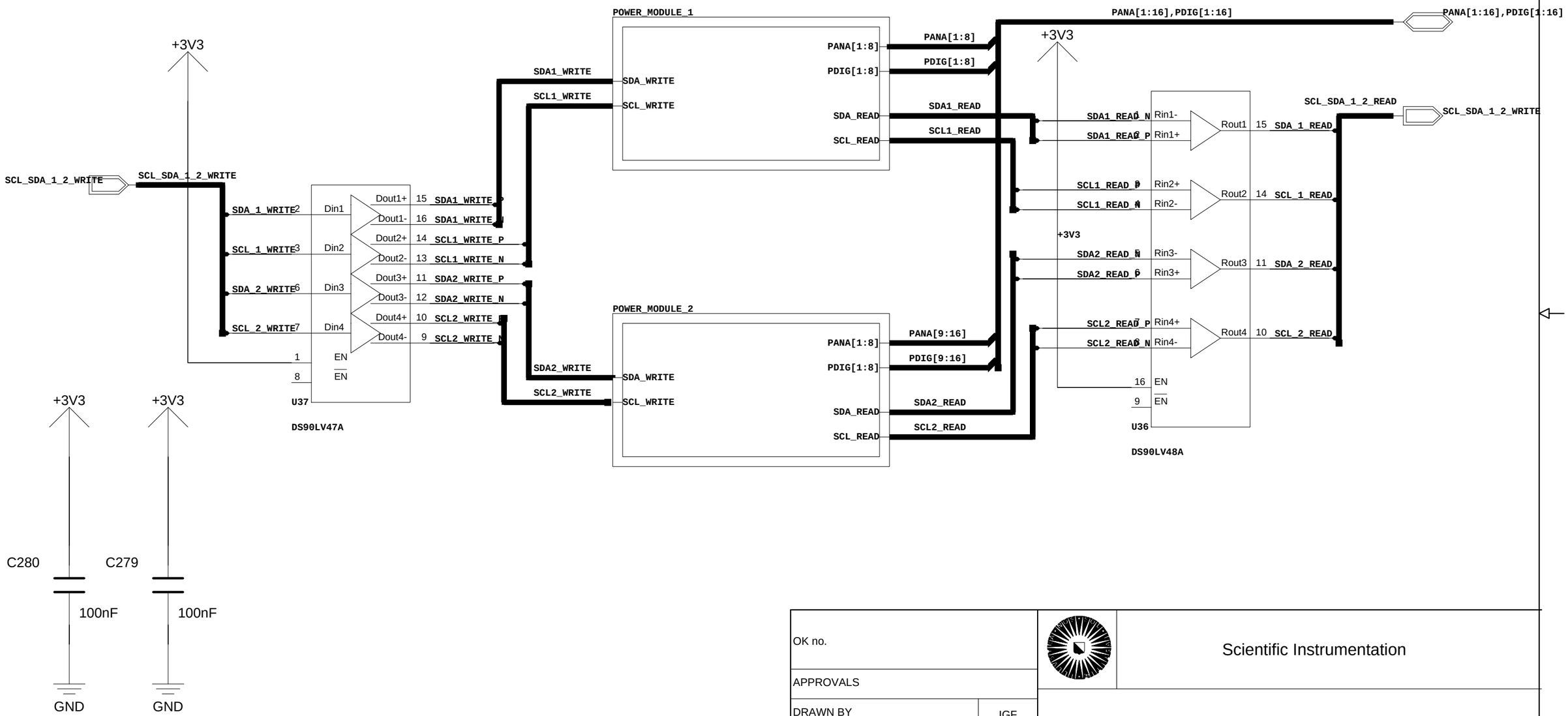

OK no.		Scientific Instrumentation	
APPROVALS			
DRAWN BY	IGF		
CHECKED		SIZE B	POWER_BOARD	VER	REV
DATE 24/02/2017:11:24			
TIME:		SHEET 1 of 40	

H=2LA; V=2LA

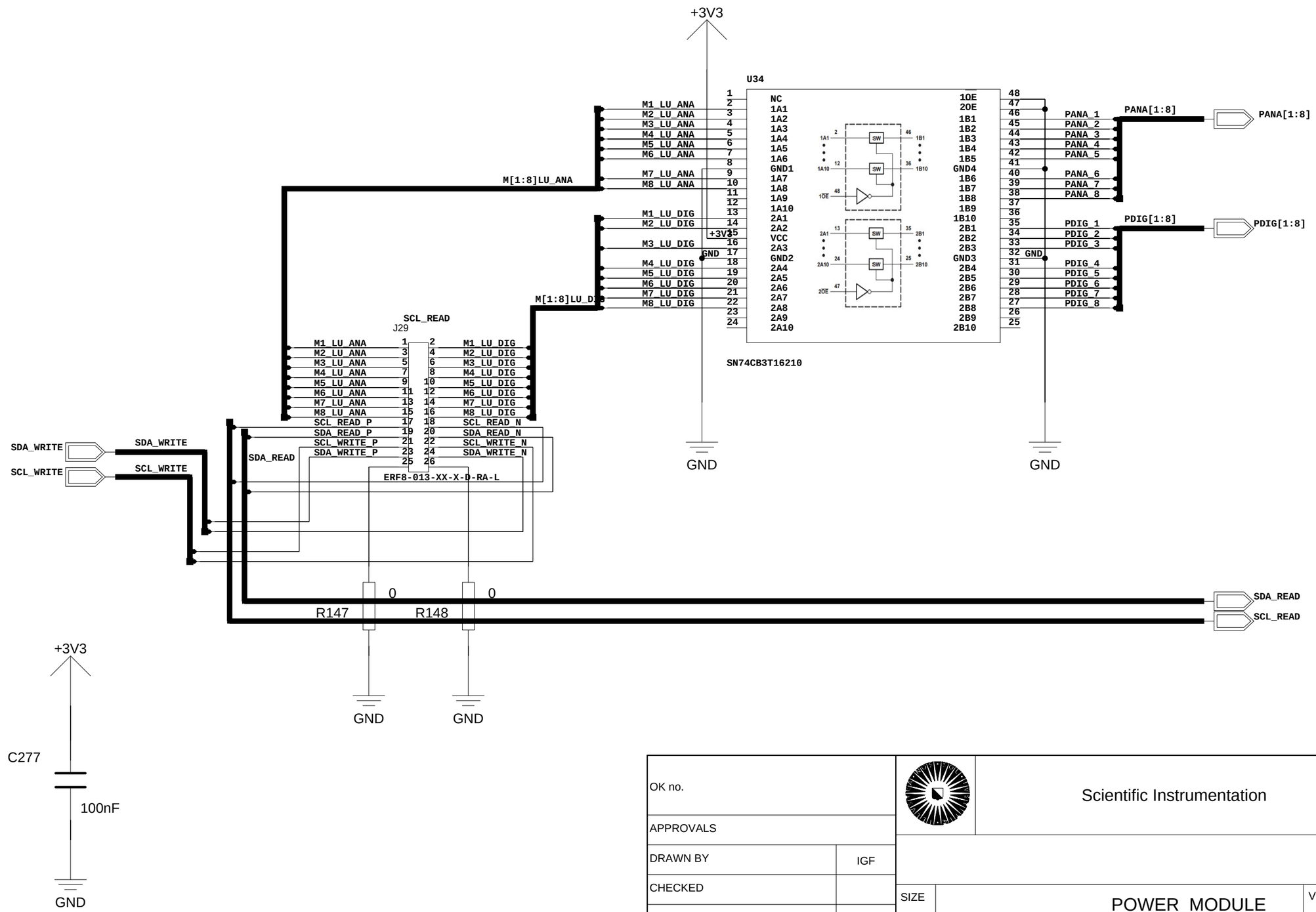

OK no.		Scientific Instrumentation	
APPROVALS			
DRAWN BY	IGF		
CHECKED		SIZE B	POWER_MODULE	VER	REV
DATE 24/02/2017:11:05			
TIME:		SHEET 1 of 40	

H=2LA; V=2LA

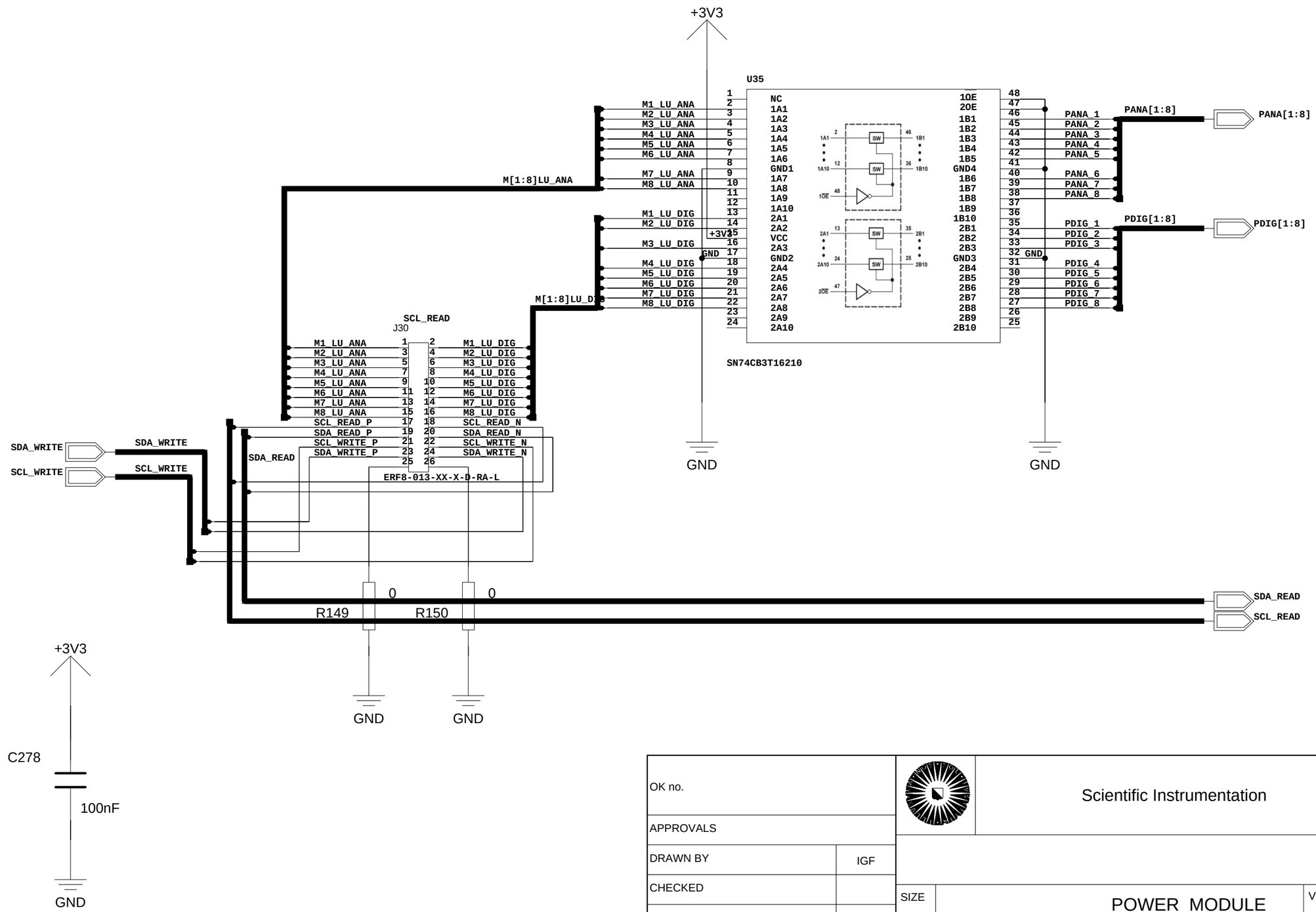

OK no.		Scientific Instrumentation	
APPROVALS			
DRAWN BY	IGF		
CHECKED		SIZE B	POWER_MODULE	VER	REV
DATE 24/02/2017:11:05			
TIME:		SHEET 1 of 40	

H=2LA; V=2LA

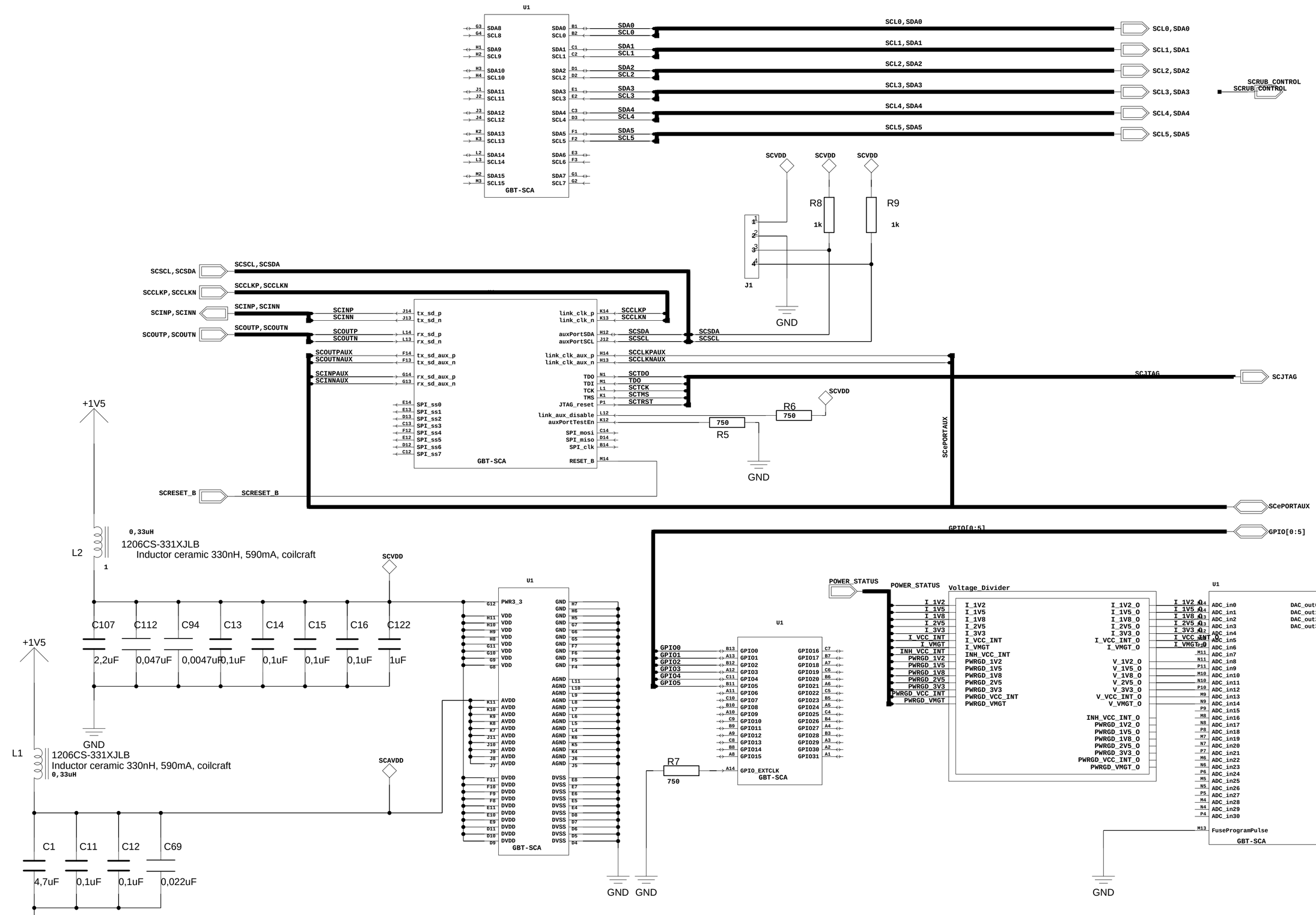

OK no.		Utrecht University Scientific Instrumentation	
APPROVALS			
DRAWN BY	IGF		
CHECKED		SIZE C — SCA — SCA	VER / REV
DATE 24/02/2017:14:26			
TIME:		SHEET 27 of 40	

H=4ND; V=4LA

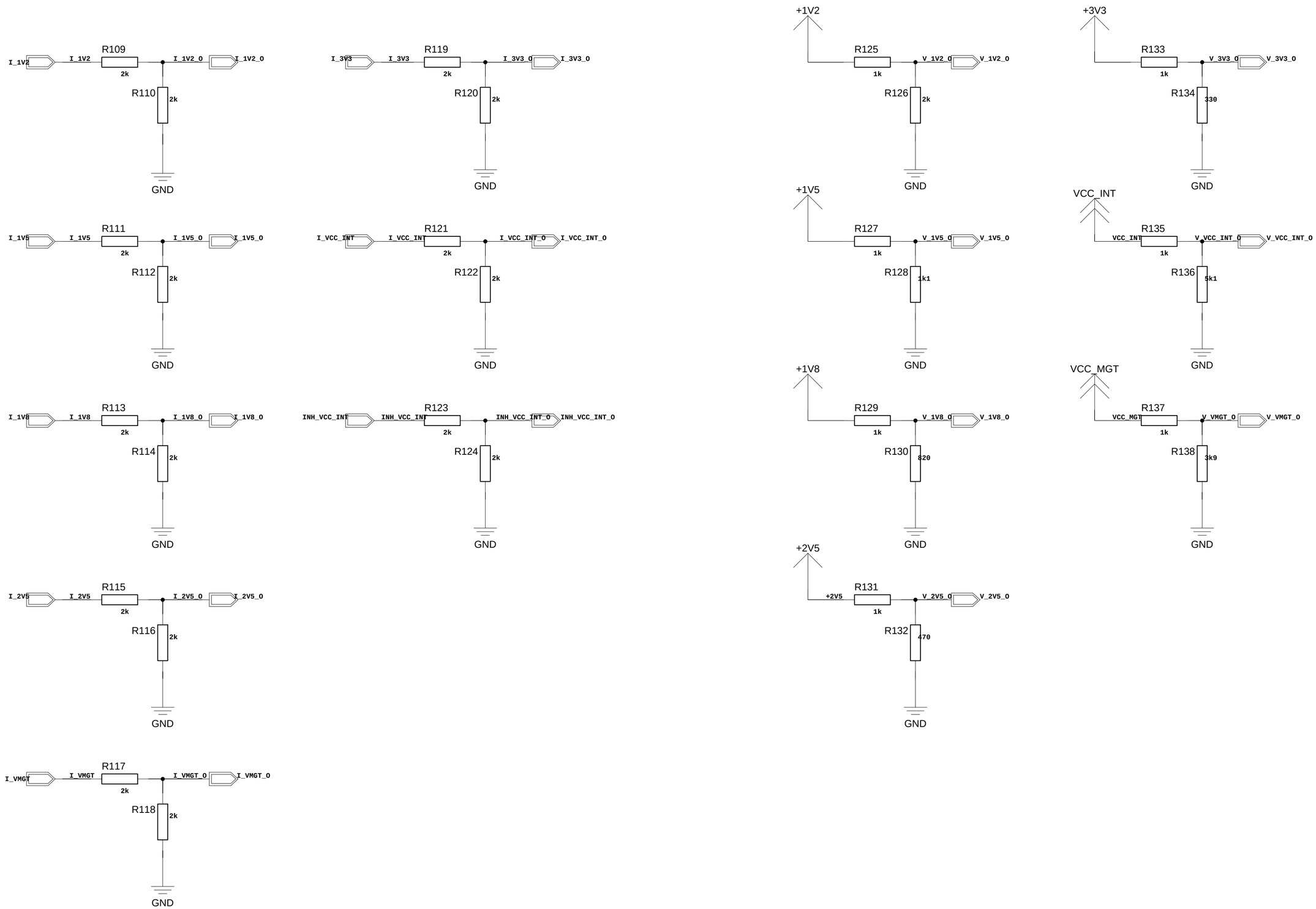

OK no.		Utrecht University Scientific Instrumentation	
APPROVALS			
DRAWN BY	IGF	Voltage_Divider	
CHECKED		SIZE C	VER / REV
DATE 10/02/2017:15:31		1	
TIME:		SHEET 28 of 40	

DWG. NO.
SH.
REV

H=4ND; V=4LA

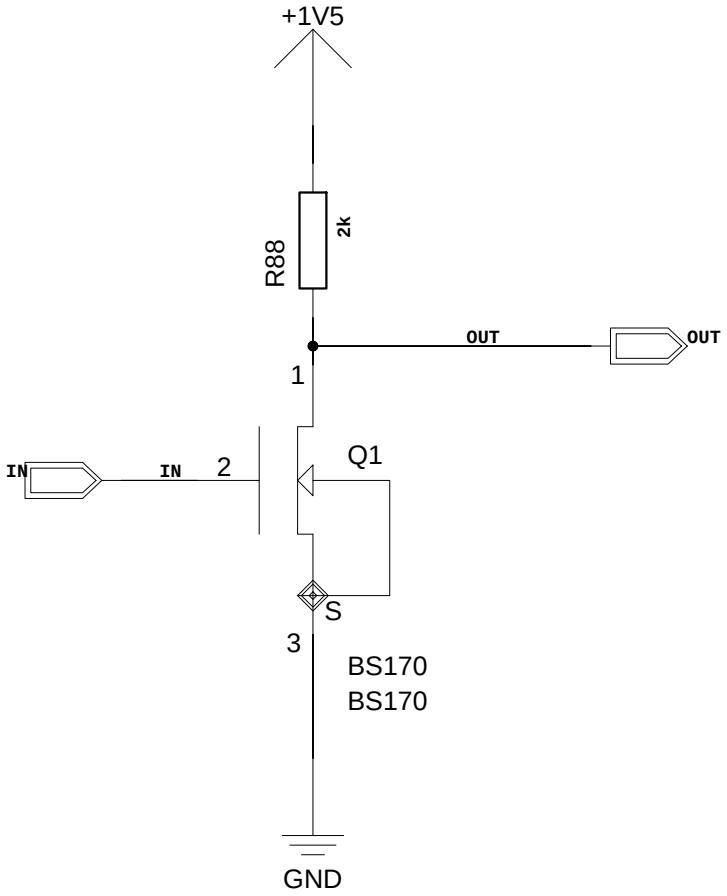

OK no.		Utrecht University	
APPROVALS		Scientific Instrumentation	
DRAWN BY	IGF		
CHECKED		SIZE A	1 DIV_INH	VER	REV
DATE 10/02/2017:15:31			
TIME:		SHEET 29 of 40	

H=2LA; V=2LA

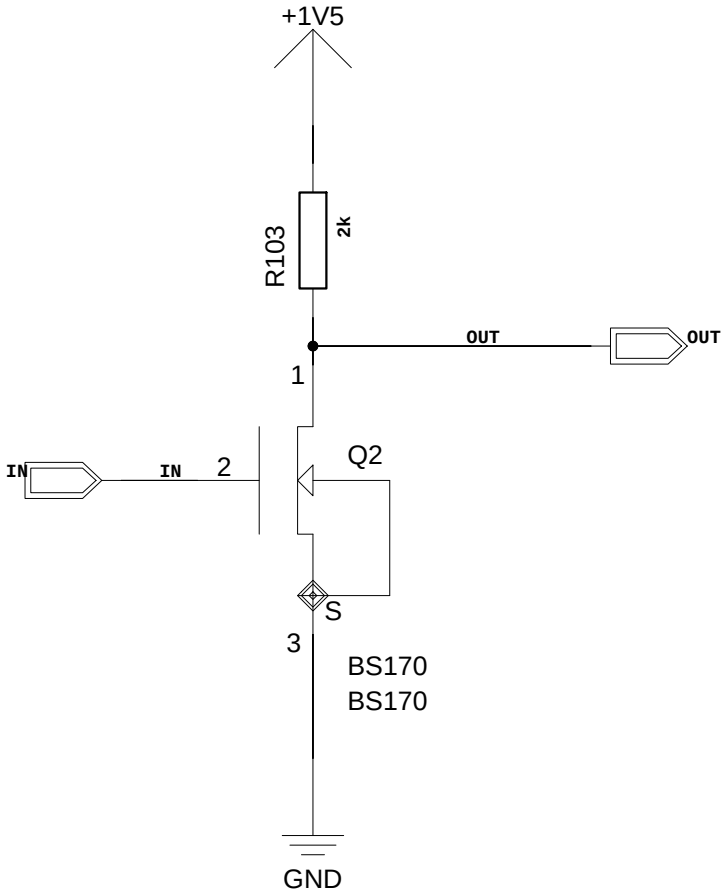

OK no.		Utrecht University	
APPROVALS		Scientific Instrumentation	
DRAWN BY	IGF		
CHECKED		SIZE A	1 DIV_INH	VER	REV
DATE 10/02/2017:15:31			
TIME:		SHEET 30 of 40	

H=2LA; V=2LA

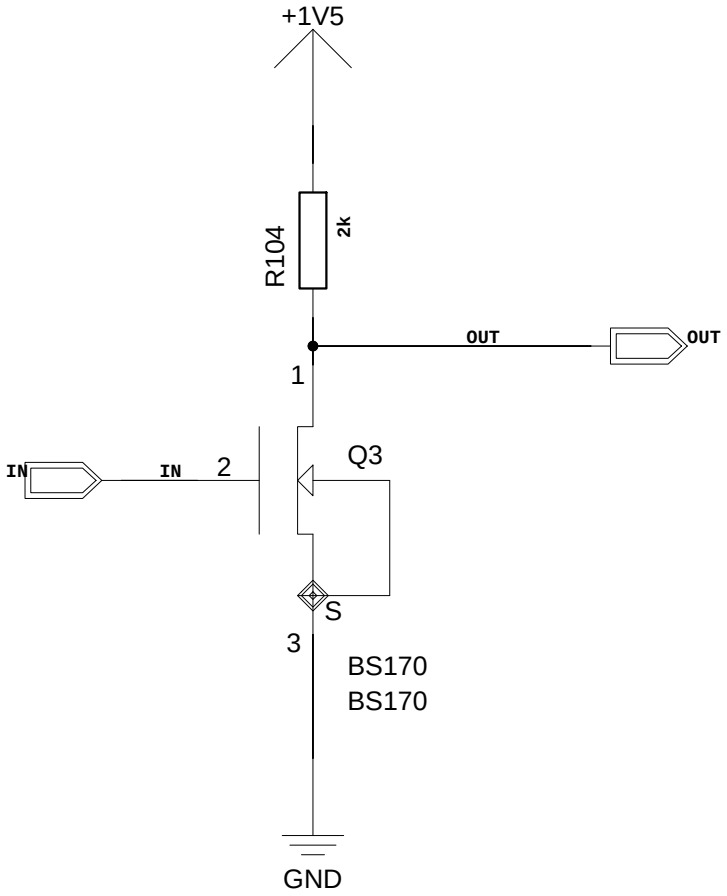

OK no.		Utrecht University	
APPROVALS		Scientific Instrumentation	
DRAWN BY	IGF		
CHECKED		SIZE A	1 DIV_INH	VER	REV
DATE 10/02/2017:15:31			
TIME:		SHEET 31 of 40	

H=2LA; V=2LA

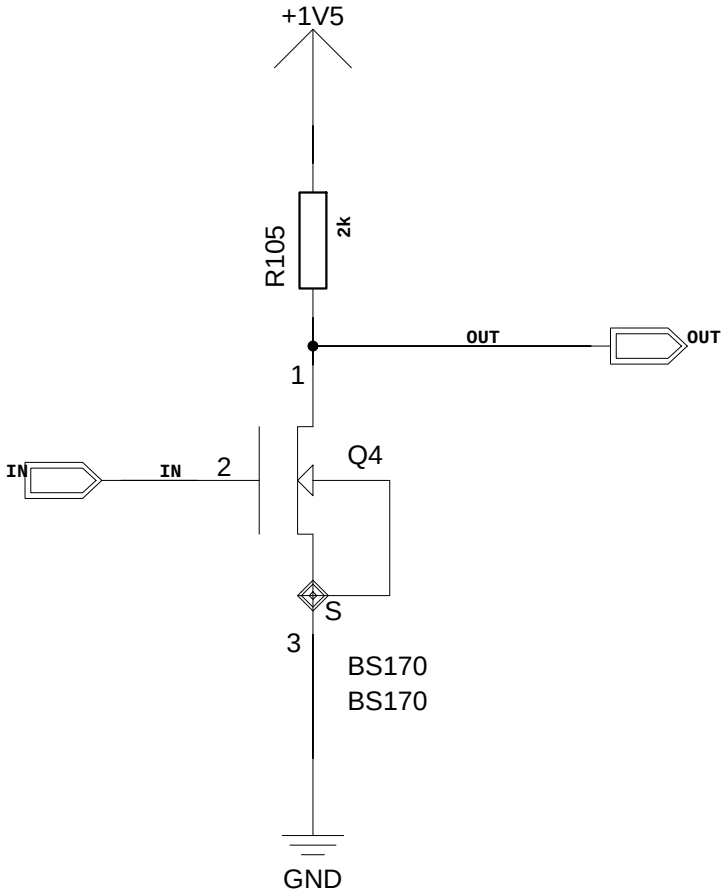

OK no.		Utrecht University	
APPROVALS		Scientific Instrumentation	
DRAWN BY	IGF		
CHECKED		SIZE A	1 DIV_INH	VER	REV
DATE 10/02/2017:15:31			
TIME:		SHEET 32 of 40	

H=2LA; V=2LA

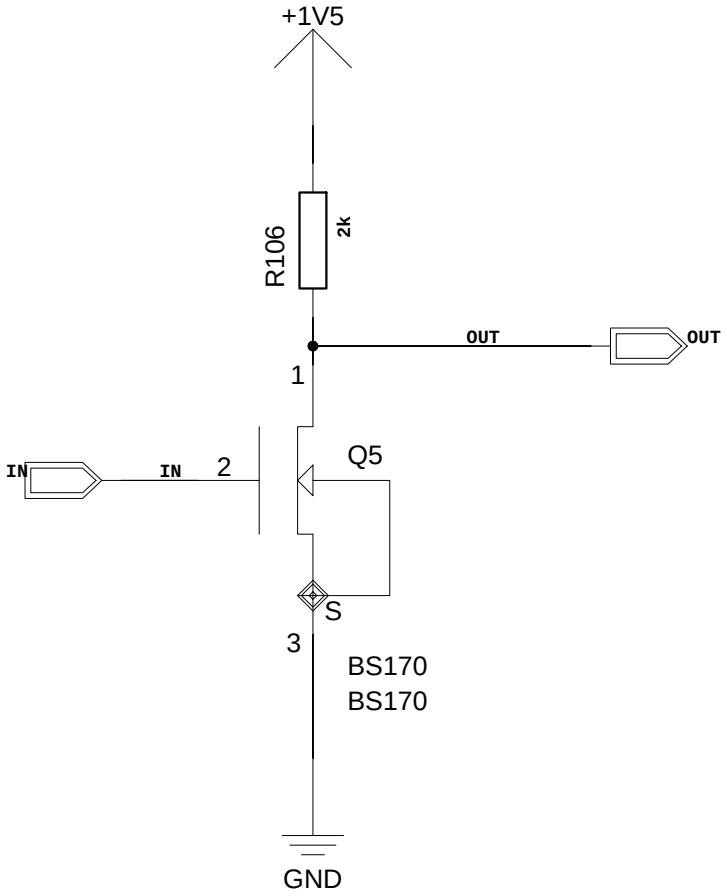

OK no.		Utrecht University	
APPROVALS		Scientific Instrumentation	
DRAWN BY	IGF		
CHECKED		SIZE A	1 DIV_INH	VER	REV
DATE 10/02/2017:15:31			
TIME:		SHEET 33 of 40	

H=2LA; V=2LA

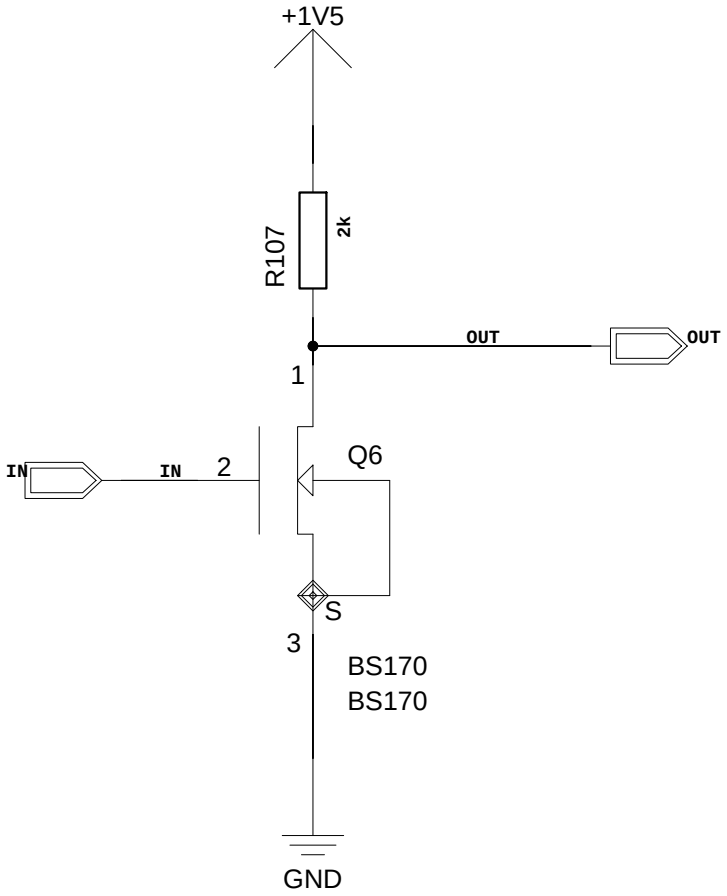

OK no.		Utrecht University	
APPROVALS		Scientific Instrumentation	
DRAWN BY	IGF		
CHECKED		SIZE A	1 DIV_INH	VER	REV
DATE 10/02/2017:15:31			
TIME:		SHEET 34 of 40	

H=2LA; V=2LA

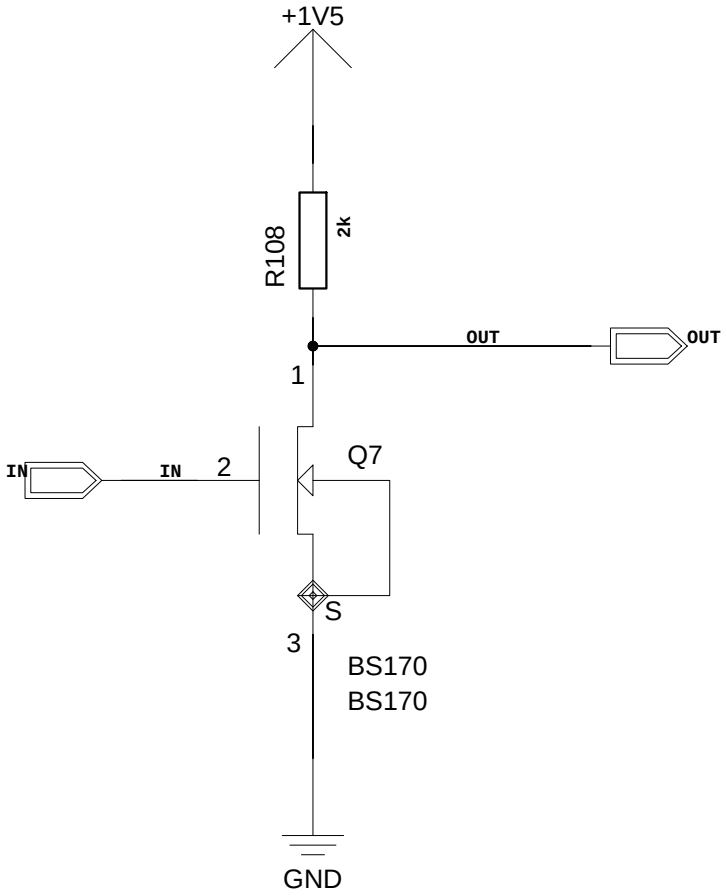

OK no.		Utrecht University	
APPROVALS		Scientific Instrumentation	
DRAWN BY	IGF		
CHECKED		SIZE A	1 DIV_INH	VER	REV
DATE 10/02/2017:15:31			
TIME:		SHEET 35 of 40	

H=2LA; V=2LA

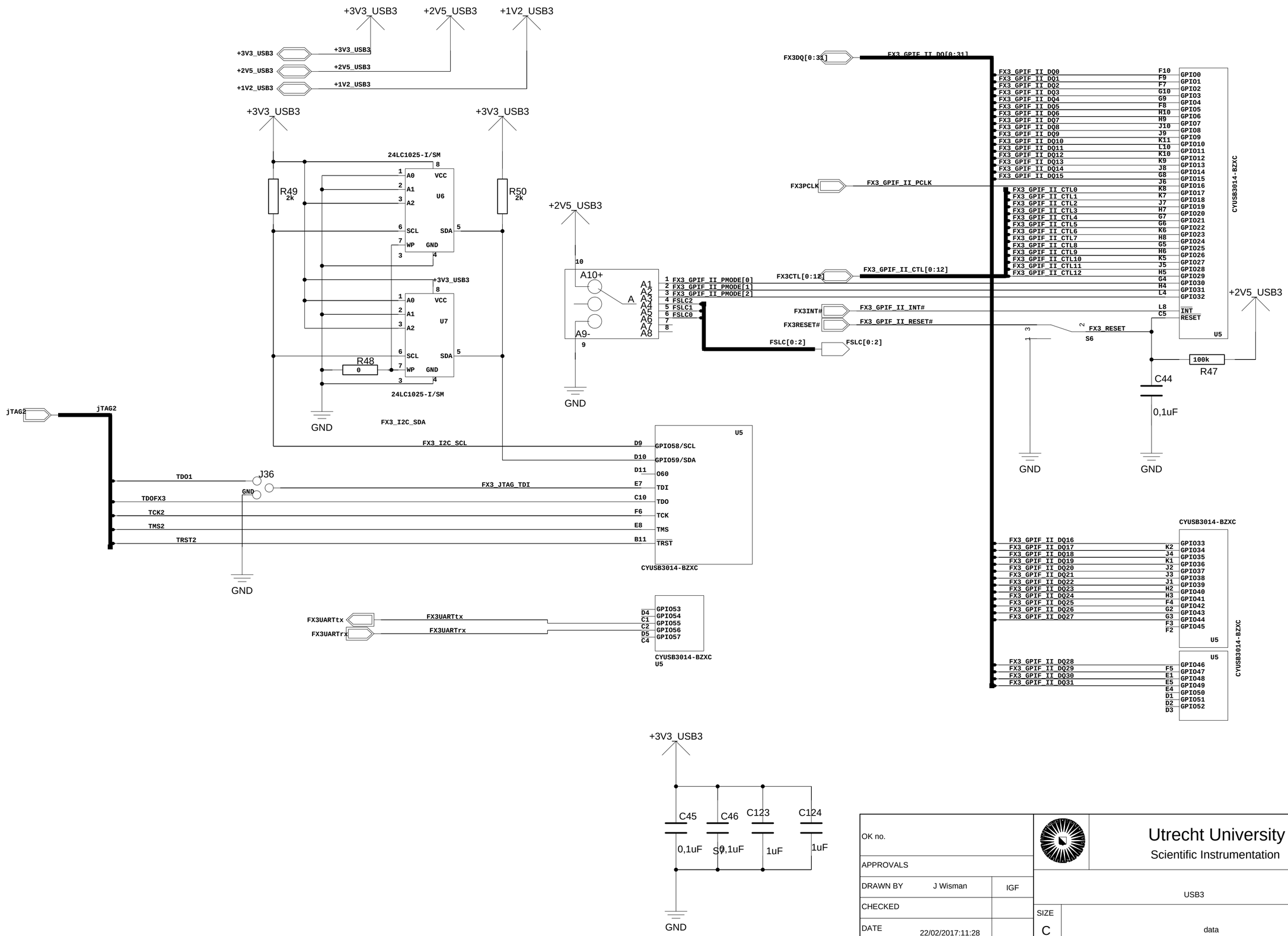

OK no.		Utrecht University Scientific Instrumentation	
APPROVALS			
DRAWN BY J Wisman	IGF	USB3	
CHECKED		SIZE C	data / VER / REV
DATE 22/02/2017:11:28			
TIME:		SHEET 36 of 40	

H=4ND; V=4LA

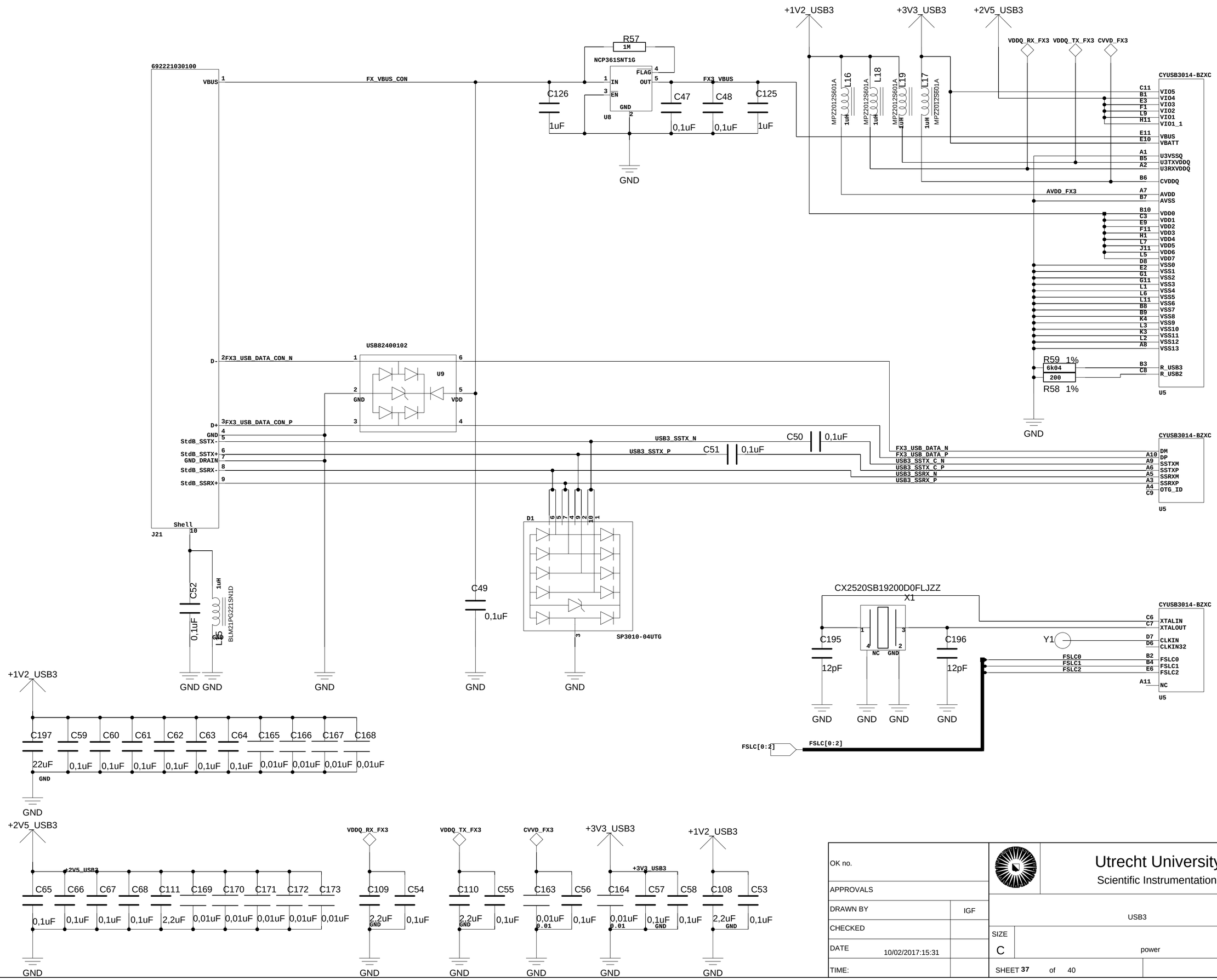

OK no.		Utrecht University Scientific Instrumentation
APPROVALS		
DRAWN BY	IGF	USB3
CHECKED		SIZE C — power — VER — REV
DATE 10/02/2017:15:31		
TIME:		SHEET 37 of 40

H=4ND; V=4LA

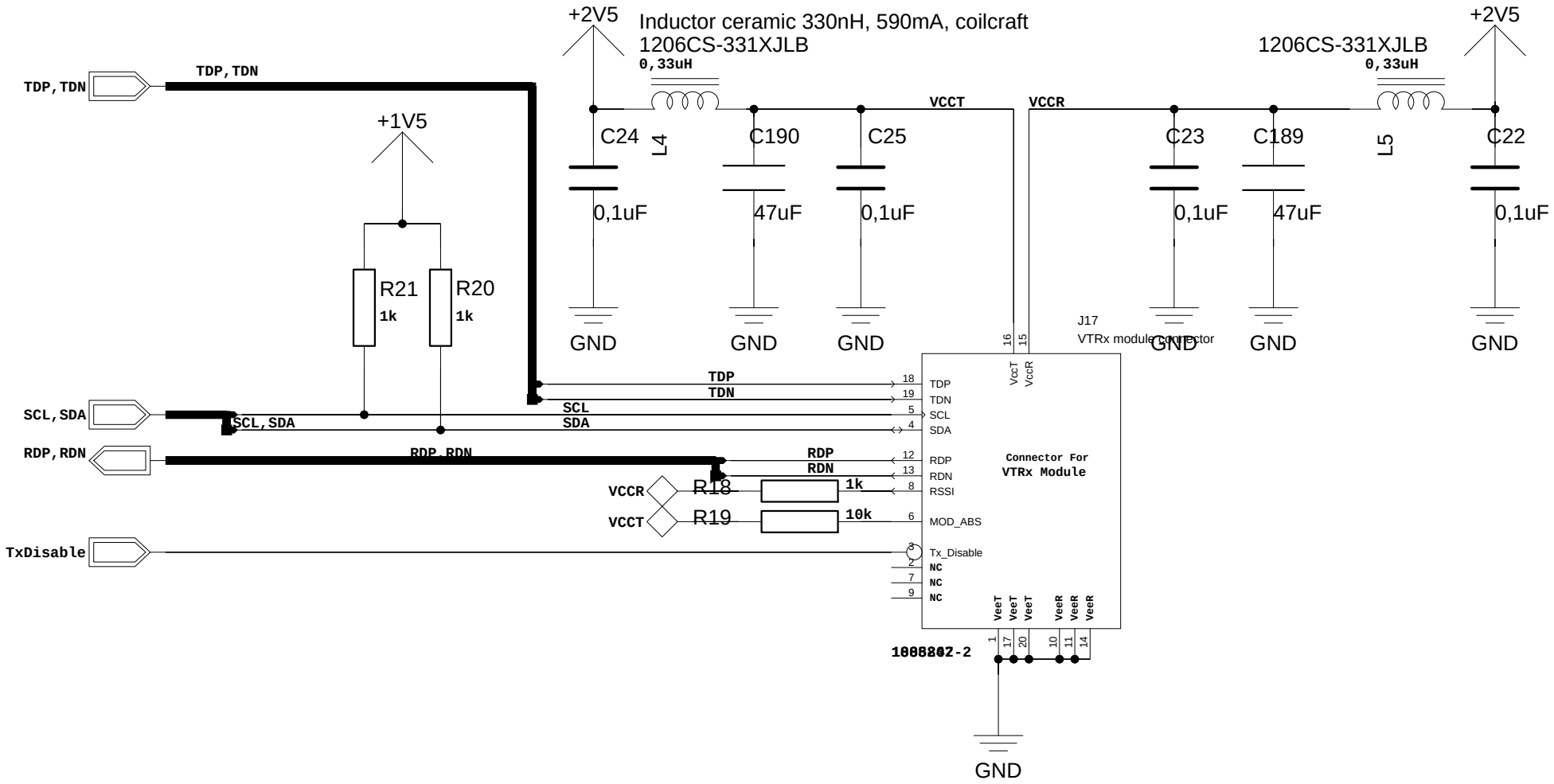

OK no.		Utrecht University	
APPROVALS		Scientific Instrumentation	
DRAWN BY	IGF		
CHECKED		SIZE A	1 VTRx	VER	REV
DATE 10/02/2017:15:31			
TIME:		SHEET 38 of 40	

H=2LA; V=2LA

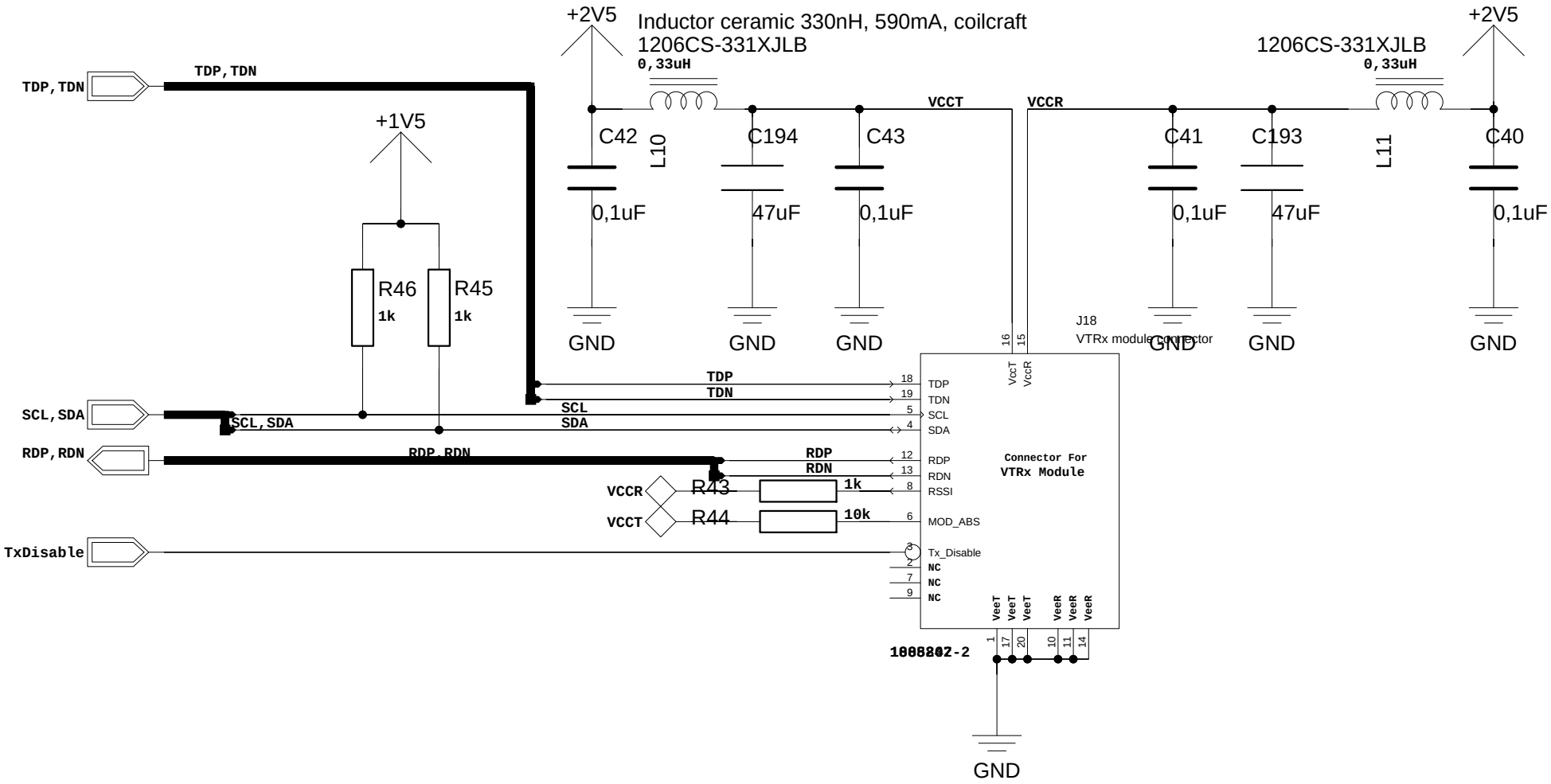

OK no.		Utrecht University	
APPROVALS		Scientific Instrumentation	
DRAWN BY	IGF		
CHECKED		SIZE A	1 VTRx	VER	REV
DATE 10/02/2017:15:31			
TIME:		SHEET 39 of 40	

H=2LA; V=2LA

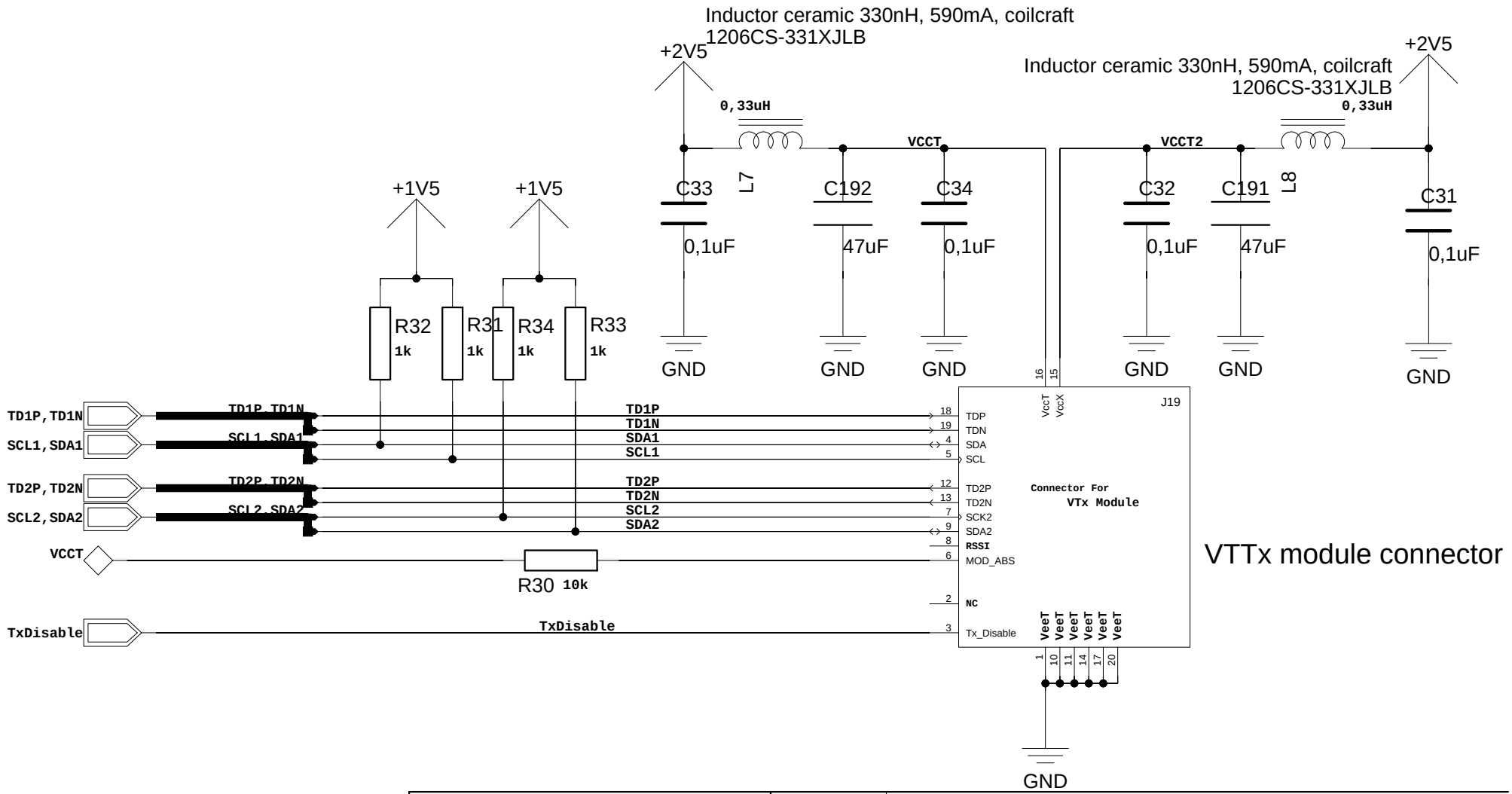

OK no.		Utrecht University	
APPROVALS		Scientific Instrumentation	
DRAWN BY	IGF		
CHECKED		SIZE A	1 VTTx	VER	REV
DATE 10/02/2017:15:31			
TIME:		SHEET 40 of 40	

H=2LA; V=2LA

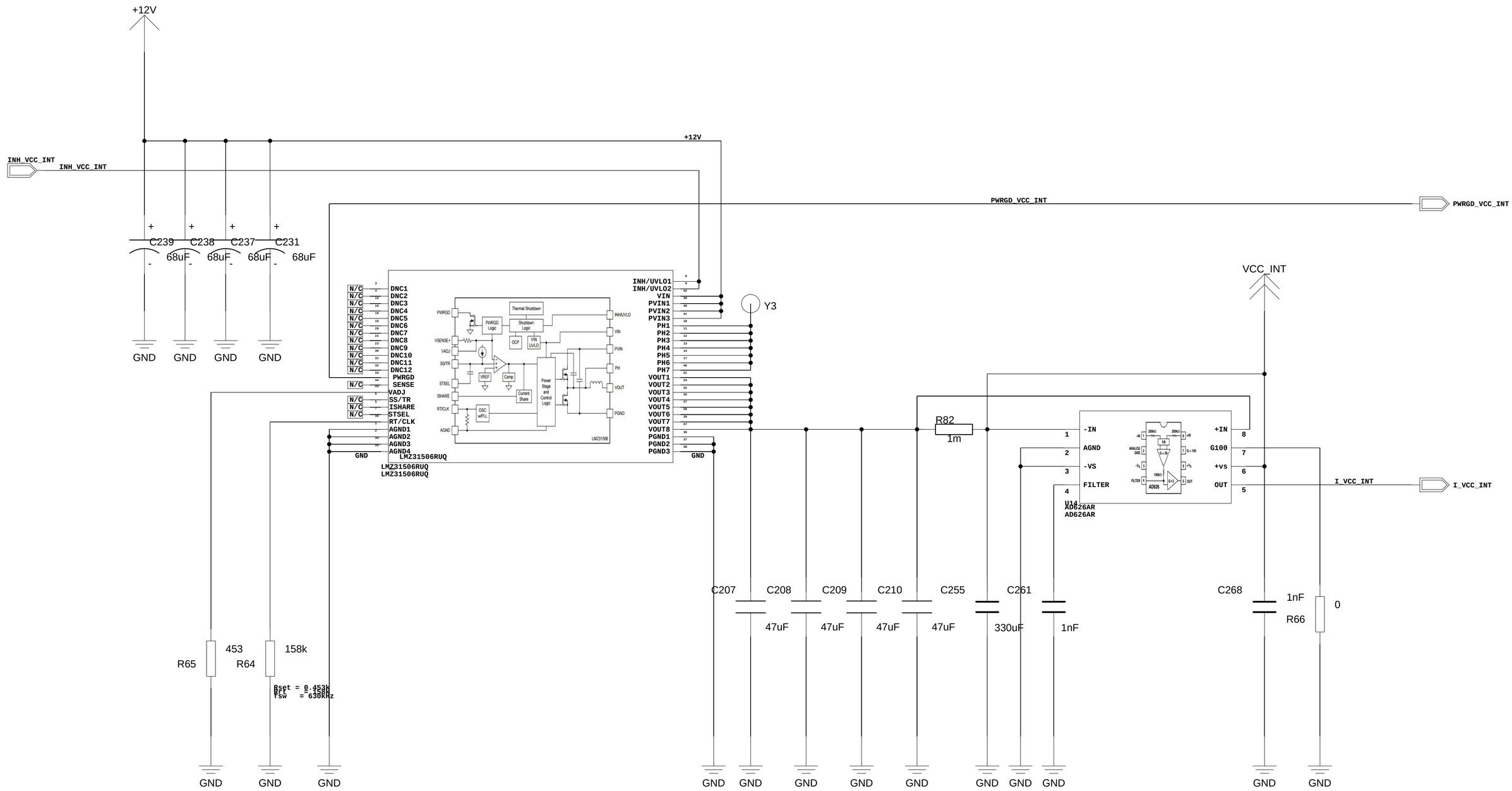

OK no.		Utrecht University Scientific Instrumentation	
APPROVALS			
DRAWN BY	IGF	VCCint	
CHECKED		SIZE C	1	VER	REV
DATE 10/02/2017:15:31			
TIME:		SHEET 22 of 40	

H=4ND; V=4LA

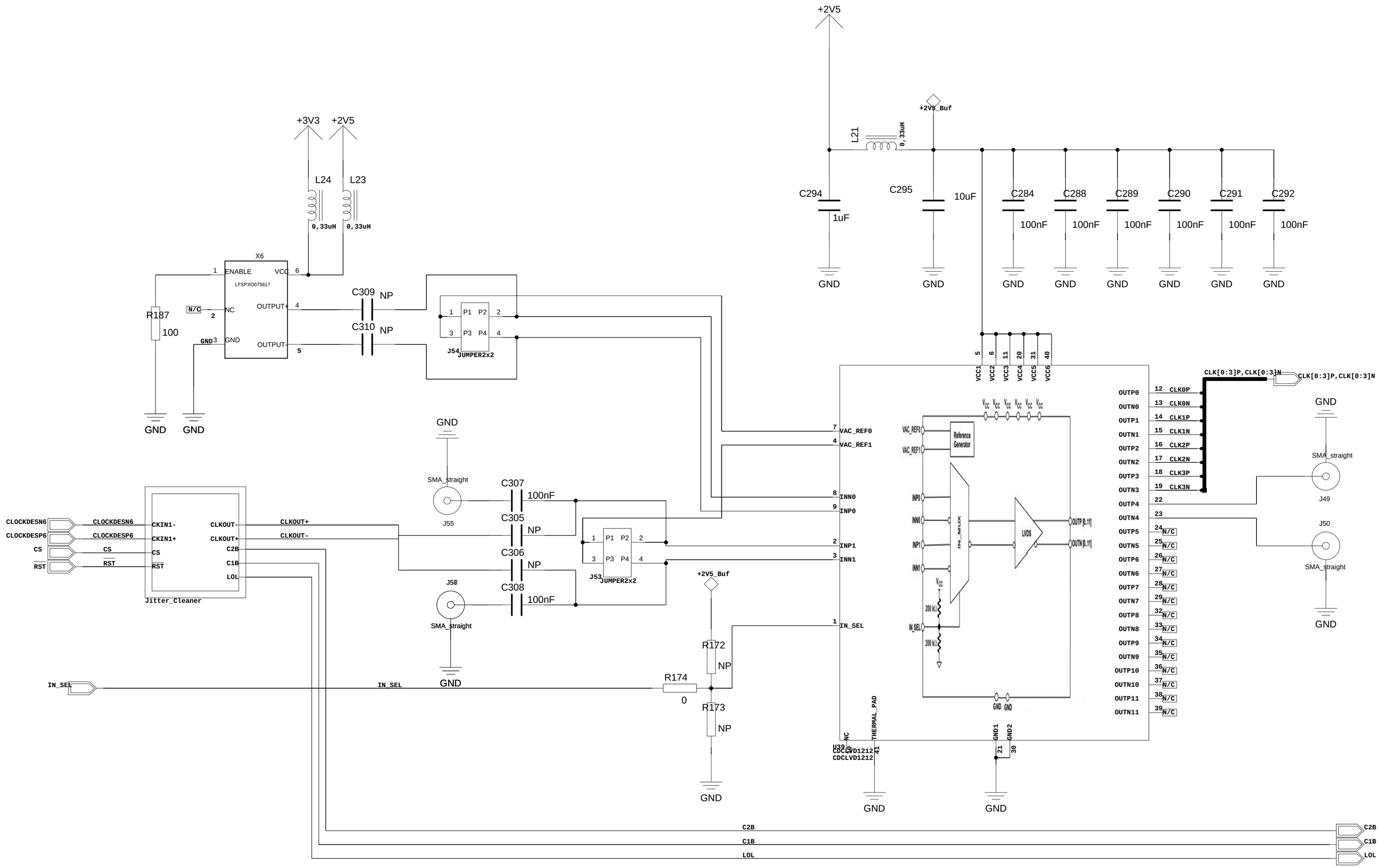

OK no.		Utrecht University Scientific Instrumentation
APPROVALS		
DRAWN BY	IGF	Clock_Block
CHECKED		SIZE C · VER · REV
DATE 24/02/2017:14:24		1
TIME:		SHEET of 43

H=4ND; V=4LA

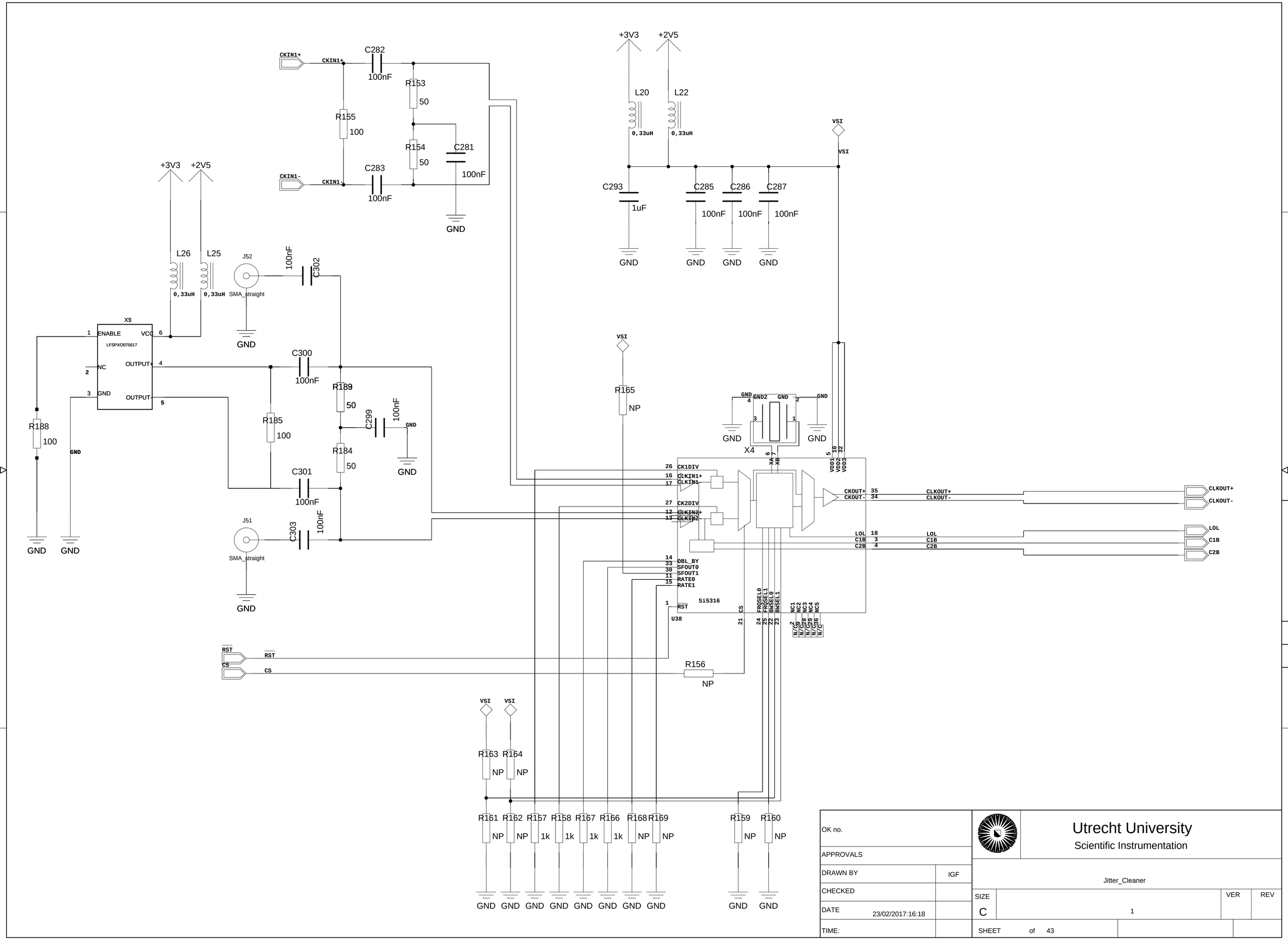

OK no.		Utrecht University Scientific Instrumentation
APPROVALS		
DRAWN BY	IGF	Jitter_Cleaner
CHECKED		SIZE C · 1 · VER · REV
DATE 23/02/2017:16:18		
TIME:		SHEET of 43

H=4ND; V=4LA

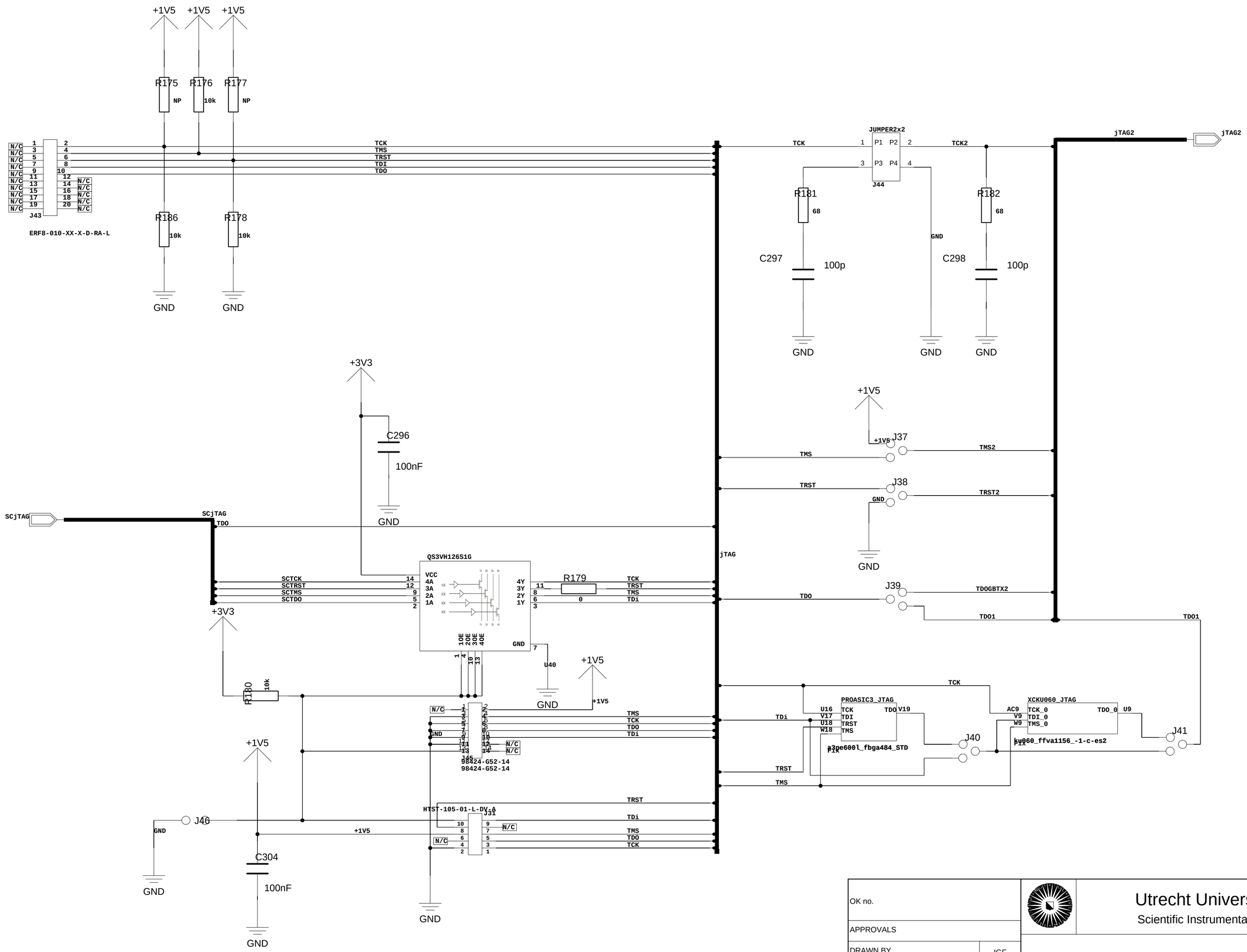

OK no.		Utrecht University Scientific Instrumentation
APPROVALS		
DRAWN BY	IGF	JTAG
CHECKED		SIZE C · 1 · VER · REV
DATE 23/02/2017:11:14		
TIME:		SHEET of 42

H=4ND; V=4LA

OK no.		Scientific Instrumentation	
APPROVALS			
DRAWN BY	IGF	J1	
CHECKED		SIZE B	VER / REV
DATE 24/02/2017:14:33			
TIME:		SHEET 1 of 44	

H=2LA; V=2LA