Readout Status

LVDS Status
Multiple Transceiver Instantiation

Matthias Bonora

LVDS Transceiver

- PRBS / Data transmission with Single Chip
- PRBS / Data transmission with OB HIC
- PRBS checker in Data path

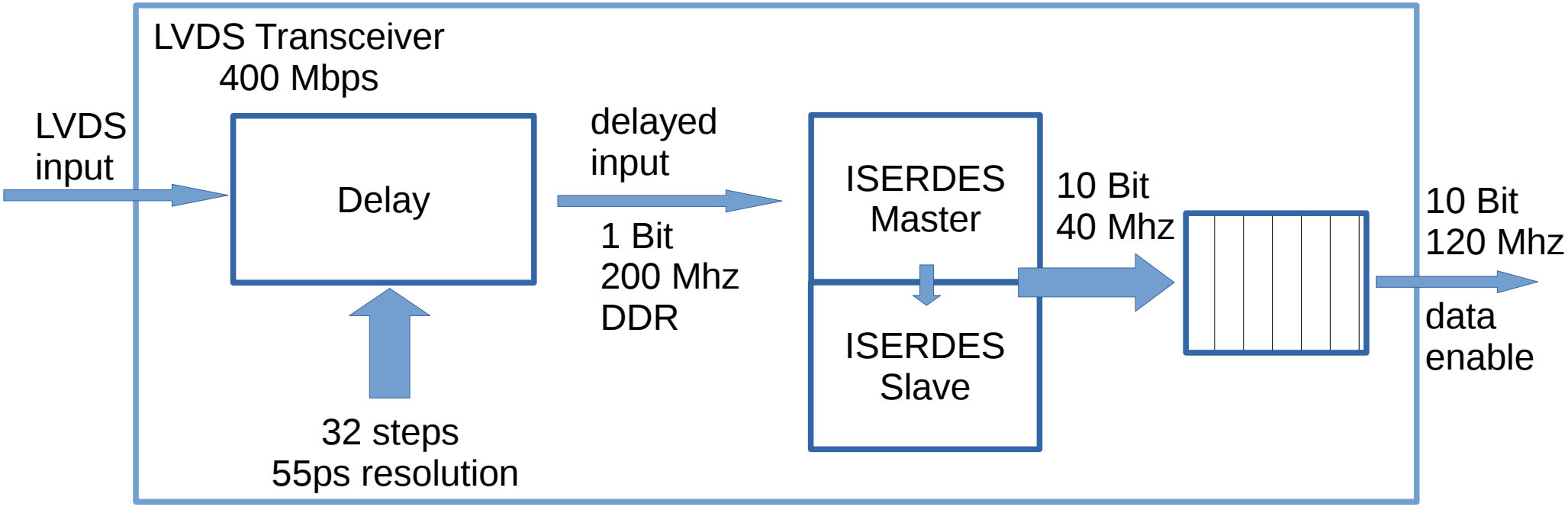

Datapath

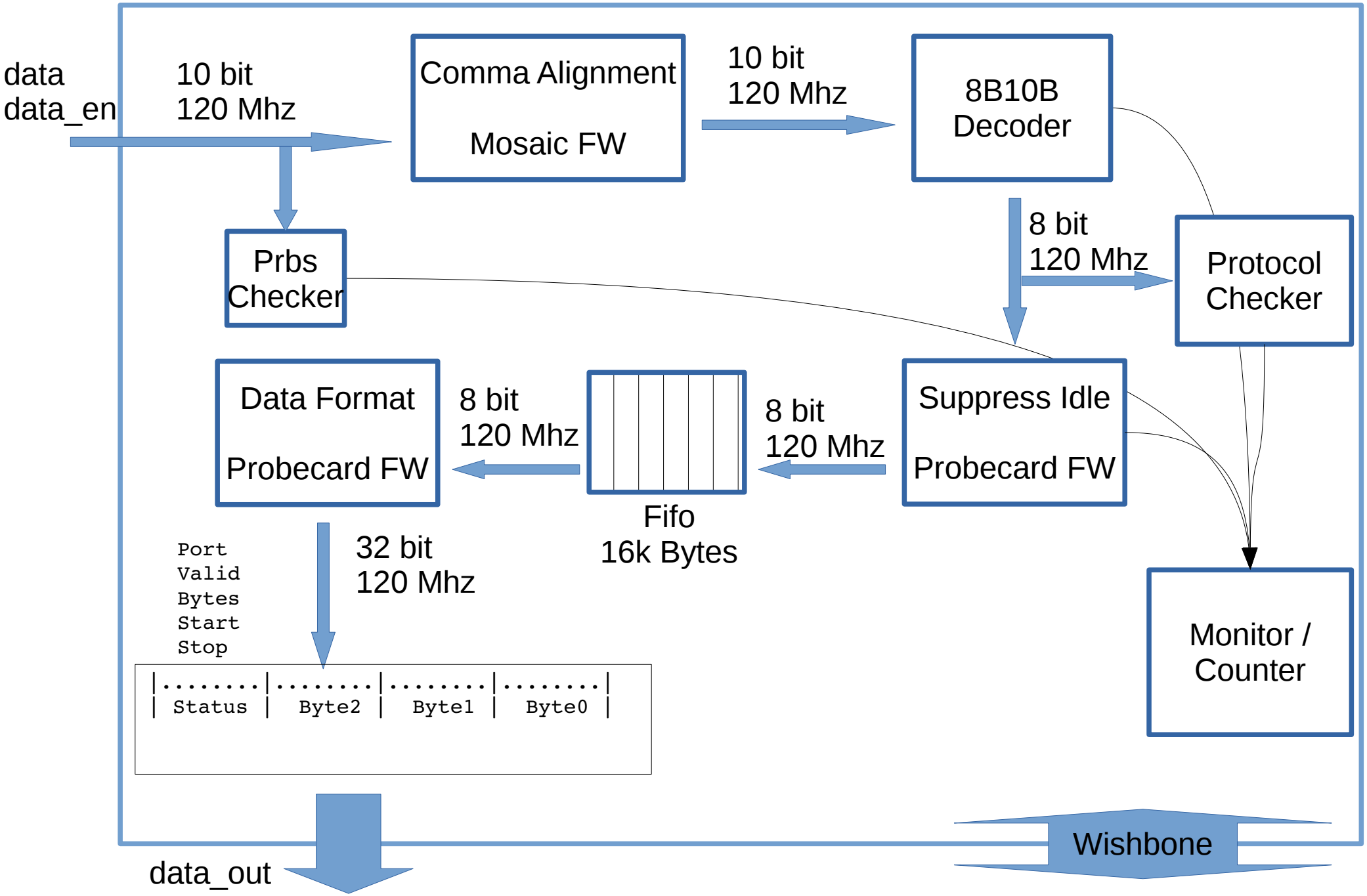
data
data_en
10 bit
120 Mhz
Comma Alignment
Mosaic FW
10 bit
120 Mhz
8B10B
Decoder
8 bit
120 Mhz
Protocol
Checker
Prbs
Checker
Data Format
Probecard FW
8 bit
120 Mhz
Fifo
16k Bytes
8 bit
120 Mhz
Suppress Idle
Probecard FW
Port
Valid
Bytes
Start
Stop
32 bit
120 Mhz
Monitor /
Counter
Status
Byte2
Byte1
Byte0
Wishbone
data_out

Resource Occupancy
Single LVDS module

Name	Slice LUT	Slice Registers	Block RAM
alpide_readout_LVDS (Full)	620	1350	6.5
alpide_readout_GTX (Full)	800	1680	6.5
– (GTX Transceiver / downsampling)	– 258	– 314	

Ruv0a – All Transceivers enabled

Resource	Utilization	Available	Utilization %
LUT	22354	203800	10.97
LUTRAM	133	64000	0.21
FF	42492	407600	10.42
BRAM	287	445	64.49
IO	143	500	28.60
GT	12	16	75.00
BUFG	7	32	21.88
MMCM	2	10	20.00

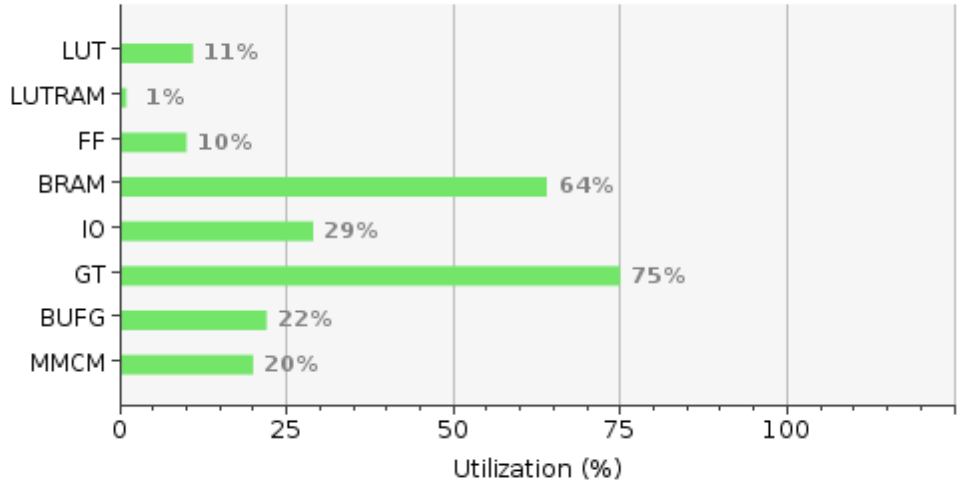

- 12 GTX Transceiver
- 13 LVDS Transceiver
- 16k FIFO per Transceiver
- 32bit 65k FIFO per USB Port