MuTr Readiness

RIKEN/RBRC
Itaru Nakagawa

MuTR Status

- Ar/Co2/CF4 gas running over a few weeks
- LV ✔
- Calibration ✔
- HV (HV scan)

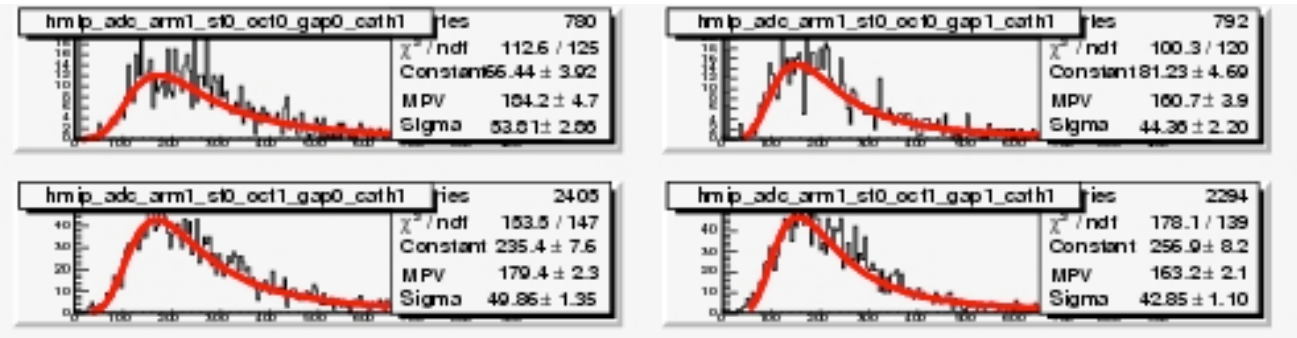

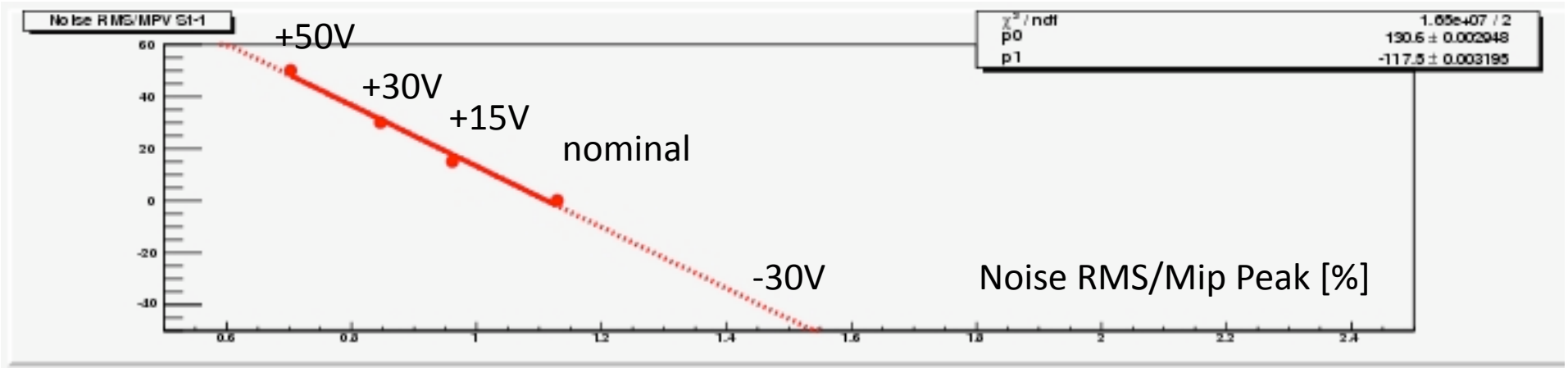

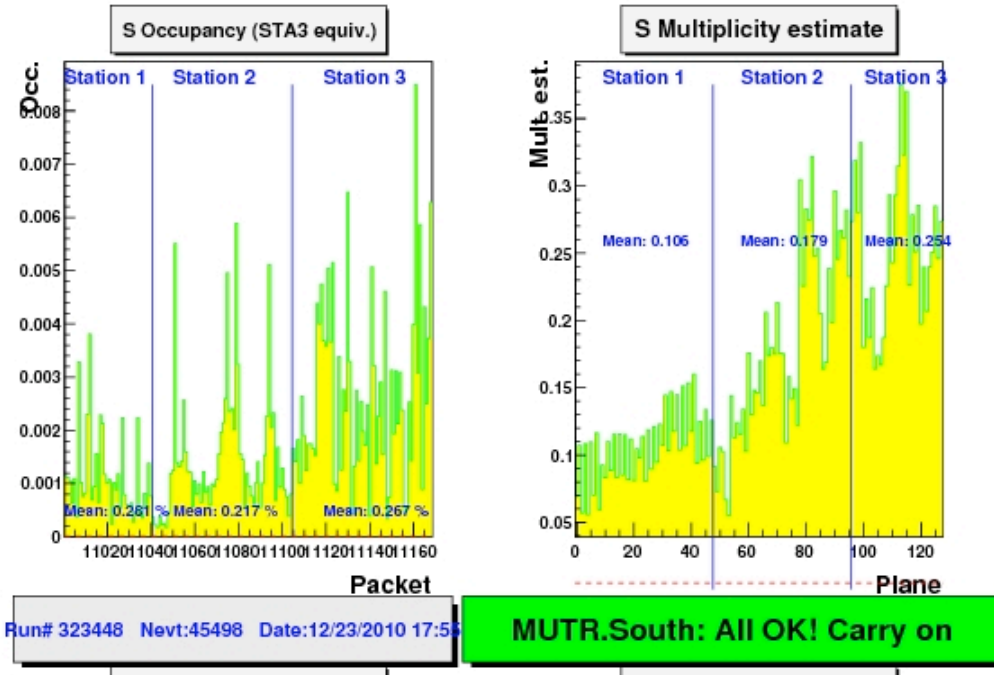
S Occupancy (STA3 equiv.)
Occ.
Station 1
Station 2
Station 3
Mean: 0.281 %
Mean: 0.217 %
Mean: 0.267 %
Packet
S Multiplicity estimate
Mult. est.
Mean: 0.106
Mean: 0.179
Mean: 0.254
Plane
Run# 323448 Nevt:45498 Date:12/23/2010 17:5
MUTR.South: All OK! Carry on

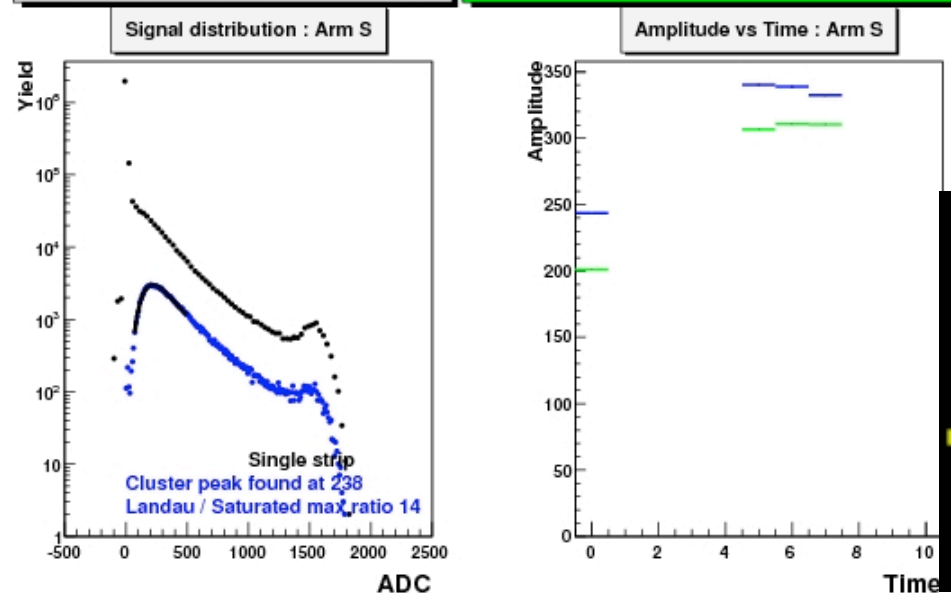
Signal distribution : Arm S
Yield
Single strip
Cluster peak found at 238
Landau / Saturated max ratio 14
ADC
Amplitude vs Time : Arm S
Amplitude
Time

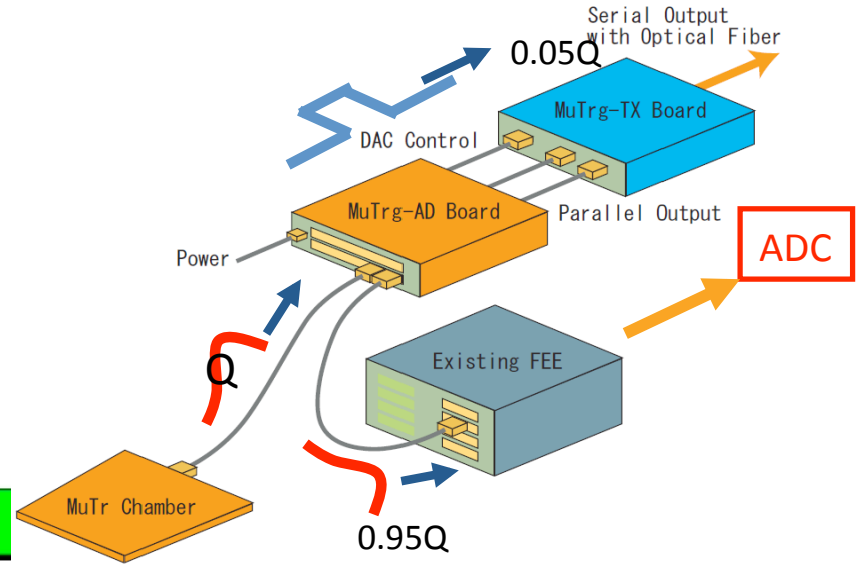
Serial Output
with Optical Fiber
0.05Q
MuTrg-TX Board
DAC Control
MuTrg-AD Board
Parallel Output
Power
ADC
Q
Existing FEE
MuTr Chamber
0.95Q

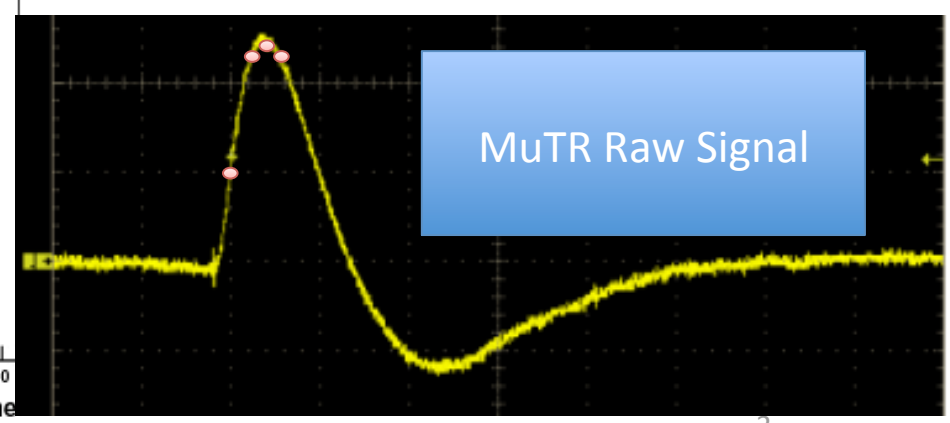
MuTR Raw Signal