DRAWING NUMBER	ITEM NUMBER	NUMBER REQD	DESCRIPTION

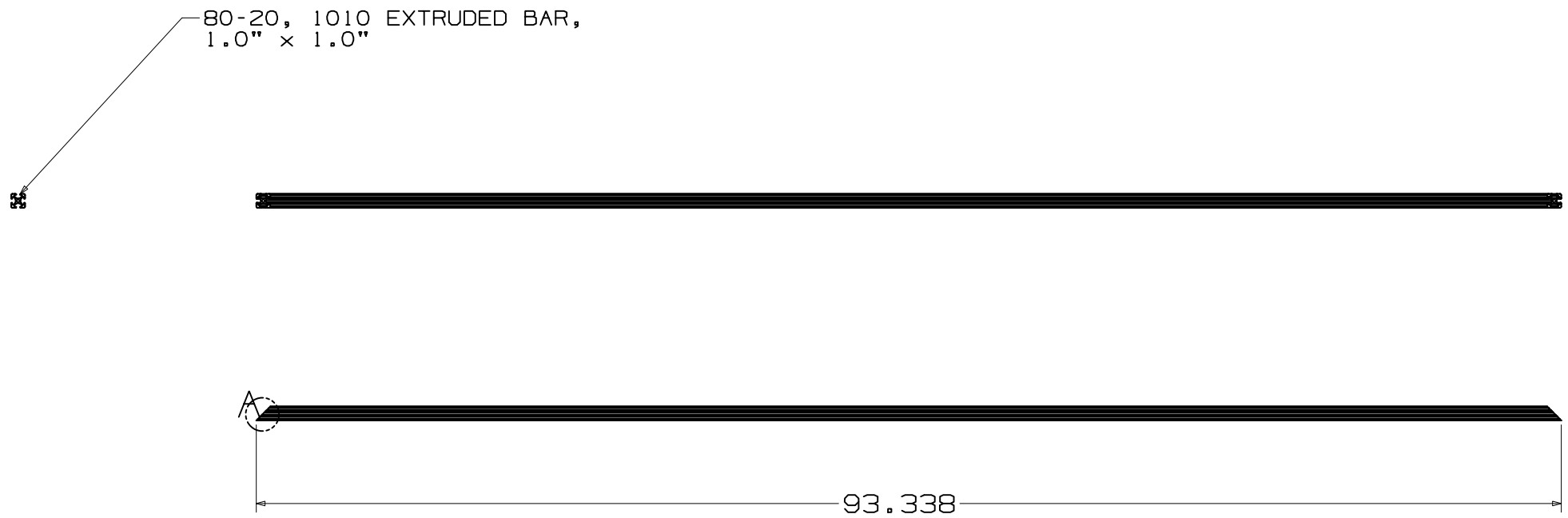

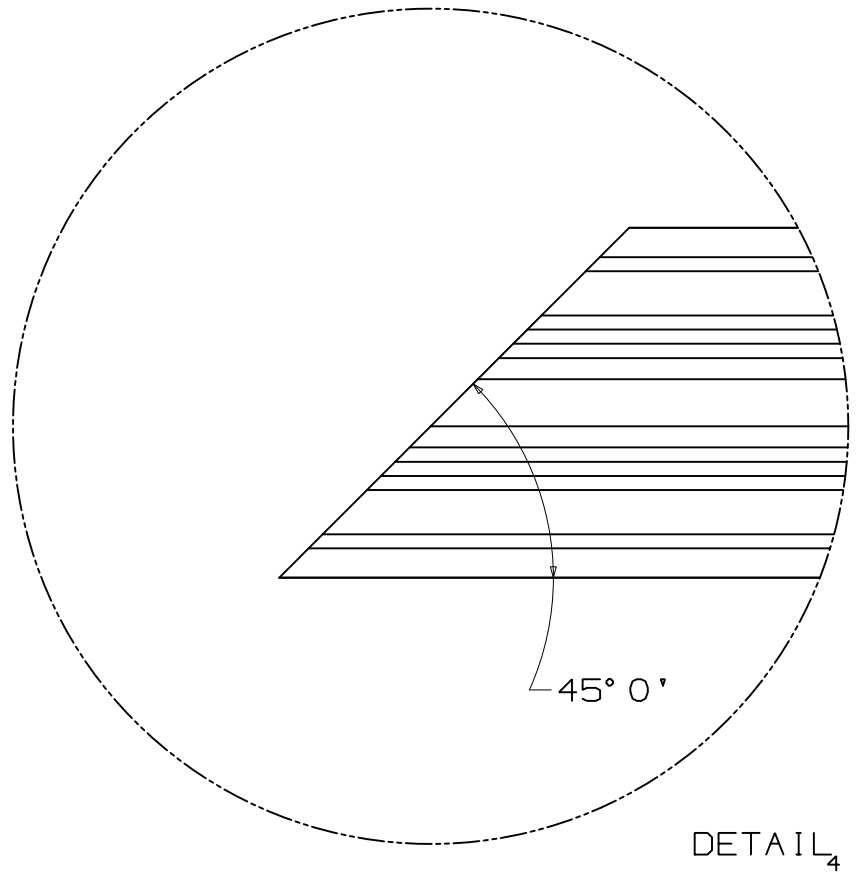

DETAIL A
SCALE 4/1

REVISION LETTER	CLASS REVIEW	REVISIONS	DATE	CHANGED BY	CHECKED BY	APPROVED BY
—		ORIGINAL ISSUE	—	—	—	—

Los Alamos
Los Alamos National Laboratory
Los Alamos, New Mexico 87545

CLASSIFICATION OF DRAWING: UNC
PART: UNC TITLE BLOCK: UNC

TITLE
E-906 PROP TUBE SUPPORT FRAME, 45 DEGREE BRACE

	SIGNATURE	DATE	GROUP
ORIGINATED	WALT	4-10	P-25
DRAWN			
CHECKED			
PROJ. ENGR.			
APPROVED			
RELEASED			

TOLERANCE-(UNLESS OTHERWISE NOTED)
X=±_____ 0.XX =±_____ ANGULAR=±_____
0.X=±_____ 0.XXX=±_____ FINISH =_____

SCALE	TOTAL SHEETS	DRAWING NO.	SHEET SIZE	NO.
			D	3