NOTES:
1. IDENTIFY PART NO. IN ACCORDANCE WITH MIL–STD–130.

REVISIONS							
REV	ZONE	ECN NO.	DESCRIPTION	BY	DATE	CKR	APP
A			INITIAL RELEASE				

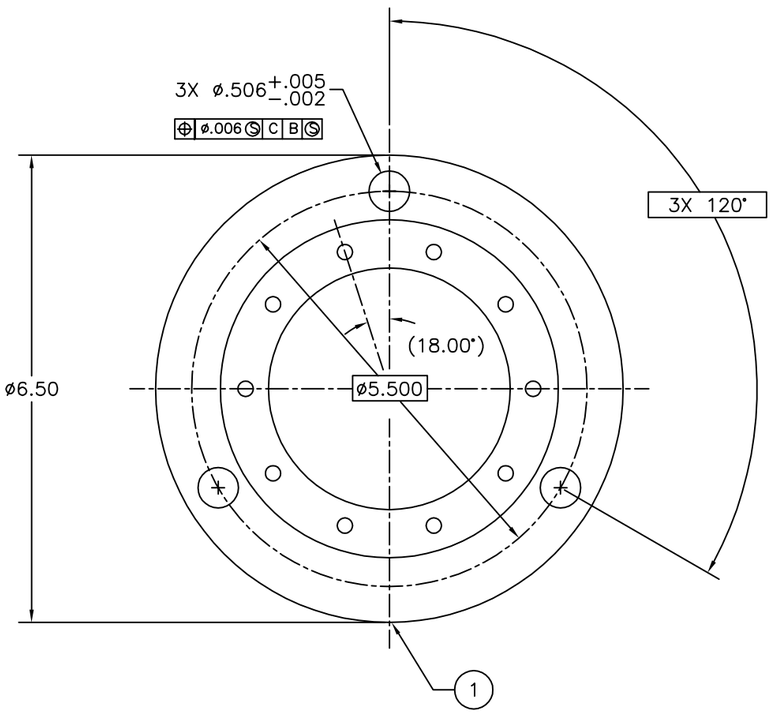

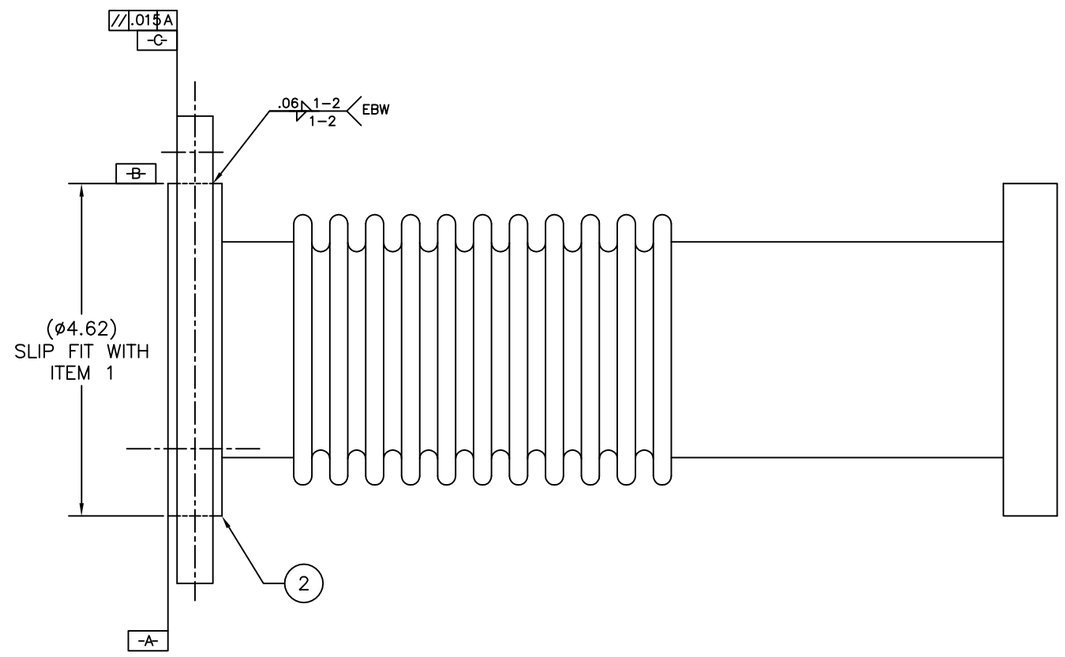

QUANTITY		ITEM NO.	PART NUMBER	DESCRIPTION	REMARKS
	1	2	42035000–03	BELLOWS, BEAM UHV	
	1	1	F–67920	PLATE, .50 THK. SST TYPE 304	PER ASTM–A240

BILL OF MATERIALS

002–0503–047	1
USED ON DRAWING NO.	QTY. PER ASS'Y.
APPLICATION	

OUTSTANDING ECN NUMBERS

INTERPRET IN GENERAL ACCORDANCE WITH ASME Y14.24M–1989

UNLESS OTHERWISE SPECIFIED

DIMENSIONS ARE IN INCHES
DECIMAL TOLERANCES
.X ± .06
.XX ± .02
.XXX ± .005
ANGULAR TOLERANCE ± 1°

125 FINISH

BREAK SHARP EDGES
MAX. .03 MIN. .01

RHIC

DRAWN BY	BOHNENBLUSCH	11/23/98
DESIGN APPROVAL		
CHECKED BY		
ENGINEER APPROVAL		
SUPERVISOR APPROVAL		
Q.A. APPROVAL		

BROOKHAVEN NATIONAL LABORATORY
UPTON, N.Y. 11973

TITLE: PHENIX
BEAMLINE SUPPORT
BELLOWS WELDMENT

SIZE D | DRAWING NUMBER: 002–0503–043 | REV. A

Q.A. CATEGORY: A–3 | SCALE: 1/1 | WEIGHT: NA | SHEET 1 OF 1

DWG NO 002–0503–043 SHT 1 OF 1 REV A