NOTE-

1. BREAK ALL EDGES .03 NOM.

| ITEM NUMBER | NUMBER REQD | DESCRIPTION |
|---|---|---|

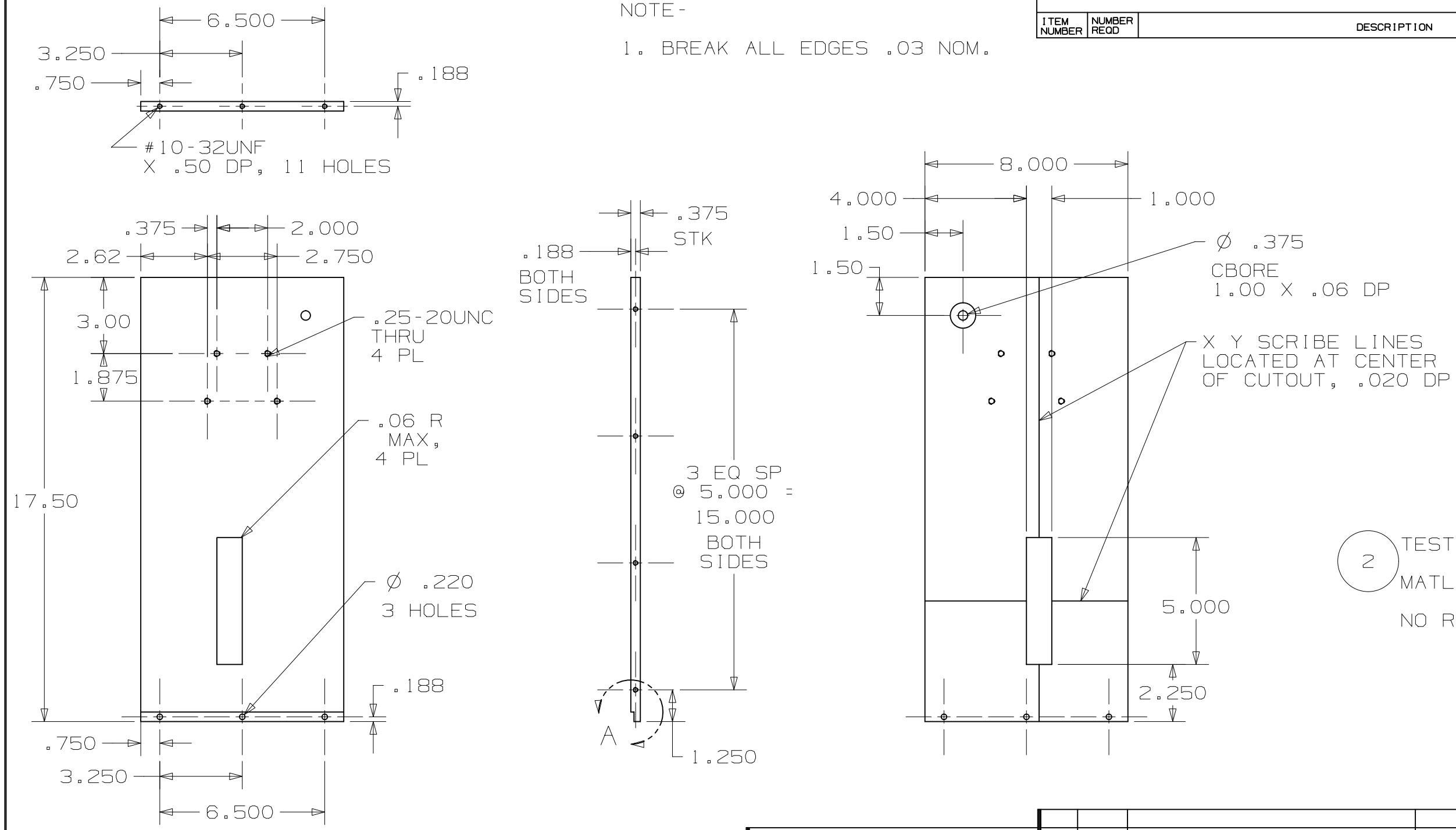


2 TEST BOX END R

MATL- ALUM 6061-T6
OR EQUAL
NO REQD -1

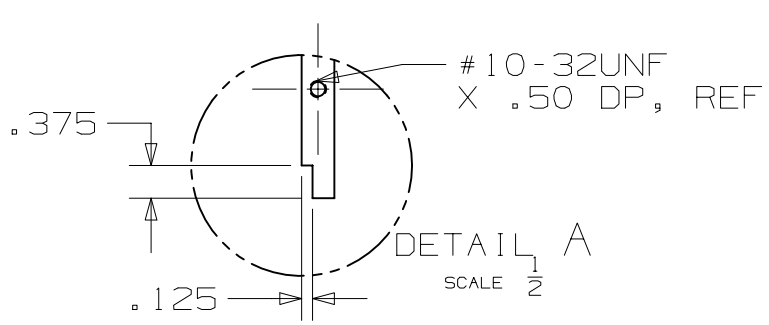


DETAIL A
SCALE 1/2

CLASSIFICATION:
DRAWING: PART: TITLE BLOCK:

| | SIGNATURE | DATE | GROUP |
|---|---|---|---|
| ORIG | | | |
| DRAWN | CLARK | 6/09 | P-25 |
| CHECKED | | | |
| PROJ ENGR | | | |
| APPROVED | | | |
| RELEASED | | | |

| REV | CLASS REVIEW | REVISIONS | DATE | CHANGED BY | CHECKED BY | APPROVED BY |
|---|---|---|---|---|---|---|
| — | | ORIGINAL ISSUE | — | — | — | — |

LOS ALAMOS
LOS ALAMOS NATIONAL LABORATORY
LOS ALAMOS, NEW MEXICO, 87545

TOLERANCE-(UNLESS OTHERWISE NOTED)
X=± ____ 0.XX =± .02 ANG=± ____
.X=± ____ 0.XXX=± .005 FIN= ____

TITLE
PHENIX

FVTX DETECTOR
TEST BOX END R

| SCALE | TOTAL SHEETS | DRAWING NO. | SIZE | NO. |
|---|---|---|---|---|
| .25 | | 126Y-1766566 | B | 3 |