HEAVY QUARK DETECTOR DATA AQUISITION SYSTEM

LANL # 126Y-267912 REV 0

1) PDF COVER SHEET
2) PCB ASSEMBLY-PRIMARY SIDE
3) PCB ASSEMBLY-SECONDARY SIDE
4) SCHEMATIC (D1-D45)
5) FABRICATION DRAWING
6) BOM

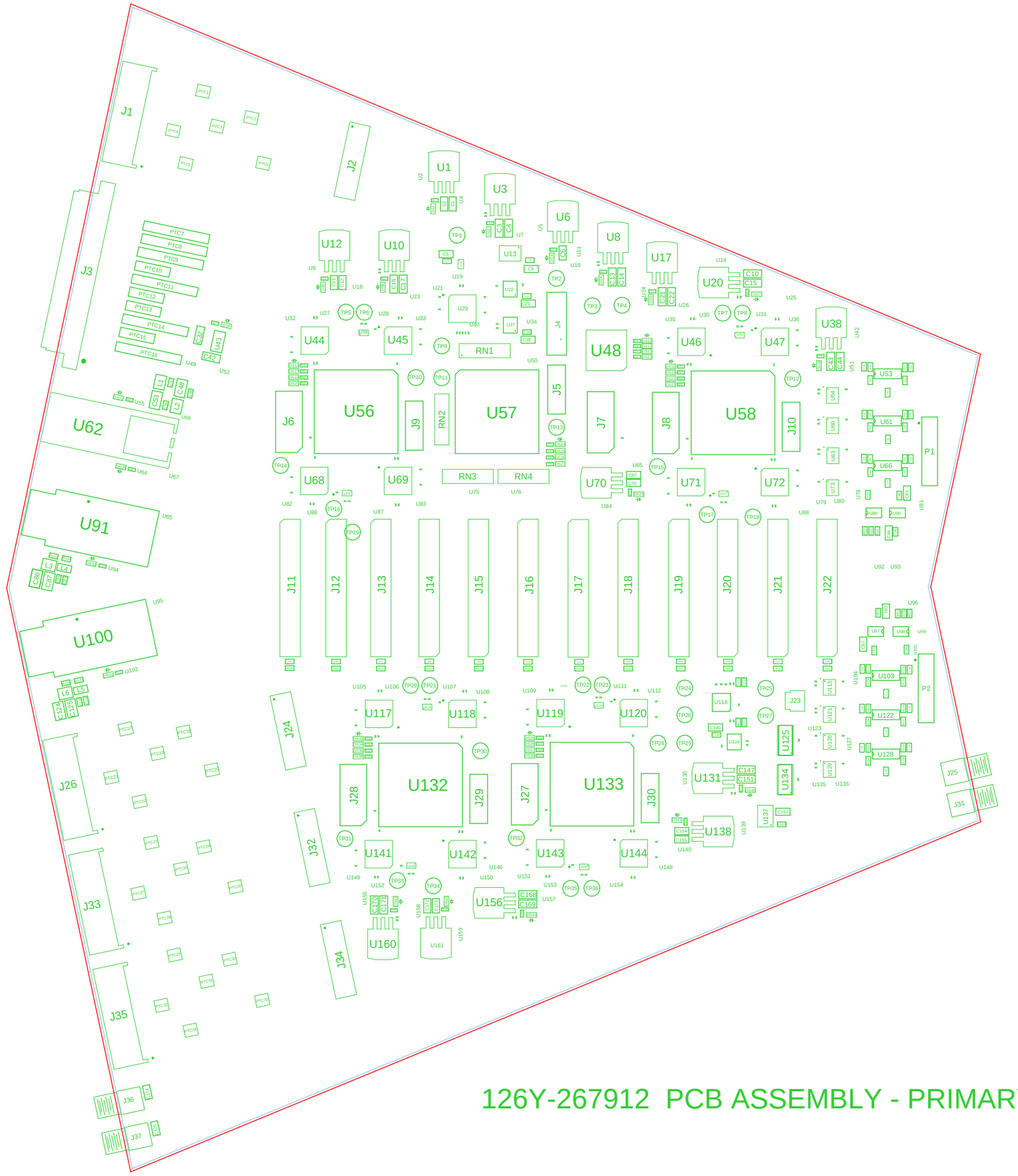

126Y-267912 PCB ASSEMBLY - PRIMARY SIDE

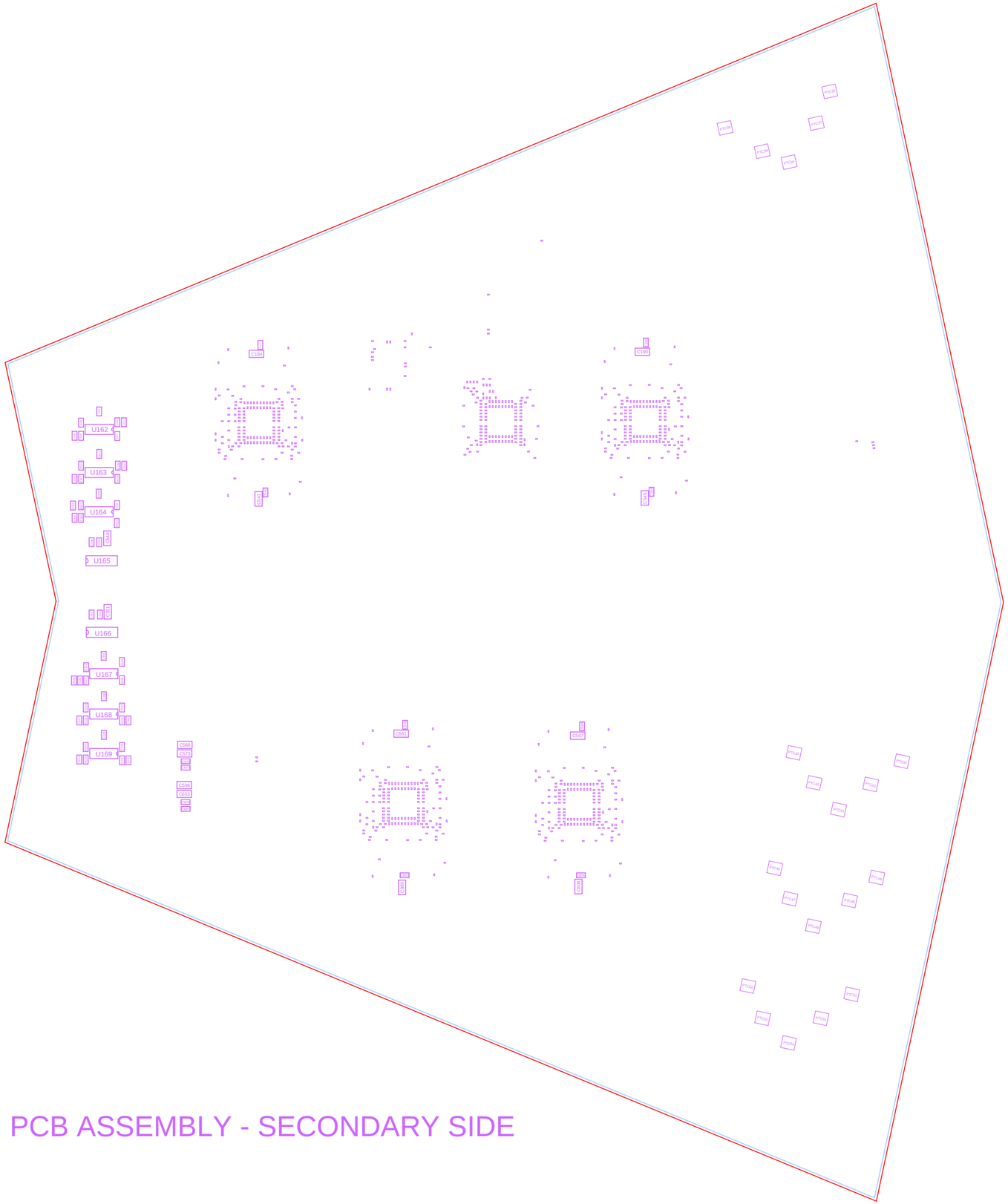
U162
U163
U164
U165
U166
U167
U168
U169
C154
C150
C157
C156
C161
C167
C168
C170
C169
C171
C163
C165
PTCB
PTCB
PTCB

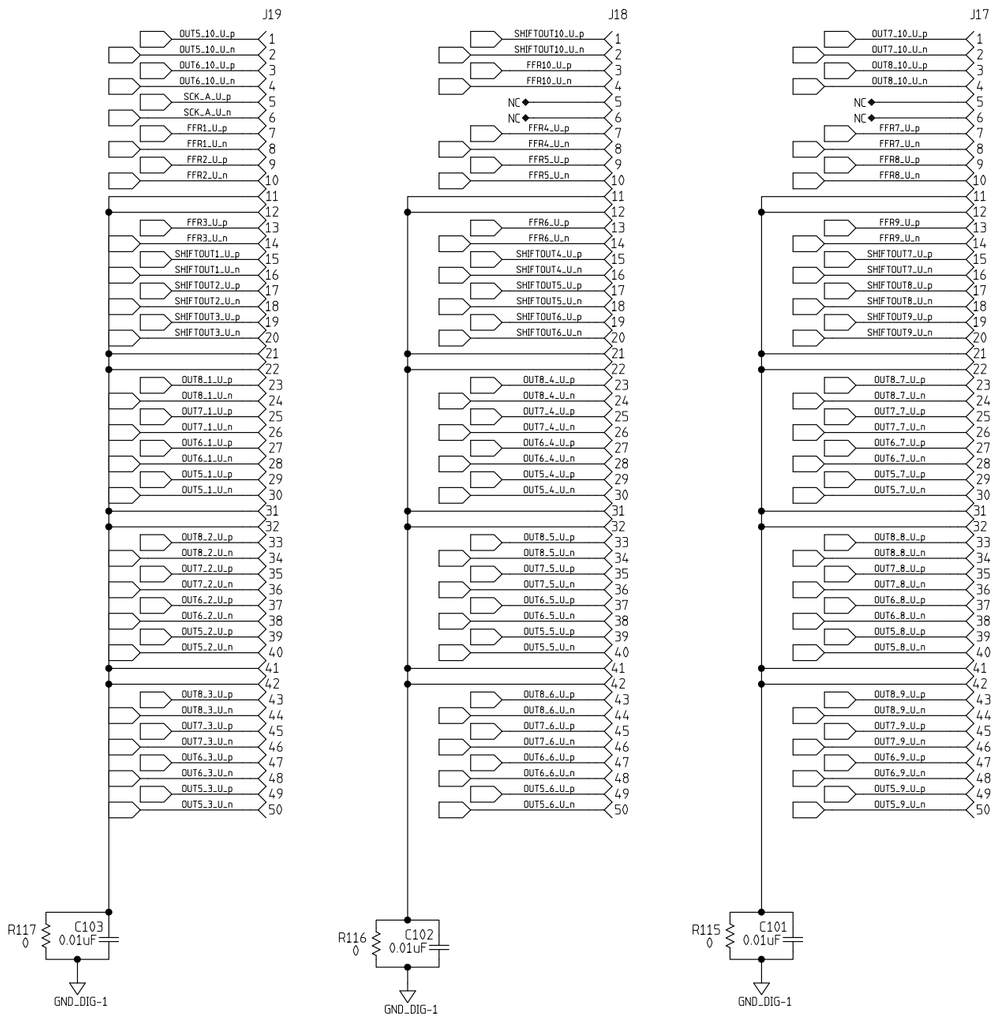

UPSTREAM, LEFT

REVISION LETTER	CLASS REVIEW	REVISIONS	DATE	CHANGE BY	CHECK BY	APPROVED BY
—		ORIGINAL ISSUE	—	—	—	—

LOS ALAMOS

LOS ALAMOS NATIONAL LABORATORY
LOS ALAMOS, NEW MEXICO 87545

MENTOR 2005

	NAME	SIGNATURE	DATE	GROUP
ORIGINATED				
DESIGNED				
DRAWN	S. CHACON	S. CHACON	JUN 2008	AOT-IC
CHECKED	M. PROKOP	M. PROKOP	JUN 2008	AOT-RFE
PROJ. ENGR.	M. PROKOP	M. PROKOP	JUN 2008	AOT-RFE
APPROVED				
RELEASED				

CLASSIFICATION OF PART: U DRAWING: U

DRAWING: U

TITLE

(P-25)

HEAVY QUARK DETECTOR
DATA AQUISITION SYSTEM
SIGNAL CONNECTORS-STATION 1

TOLERANCE (UNLESS OTHERWISE NOTED)

X= ± ——— 0.XX= ± ——— ANGULAR ± ———
0.X= ± ——— 0.XXX= ± ——— FINISH ± ———

SCALE	NO. SHEETS	DRAWING NO.	SIZE	SHEET NO.
N/A	1	126Y-267912	D	1

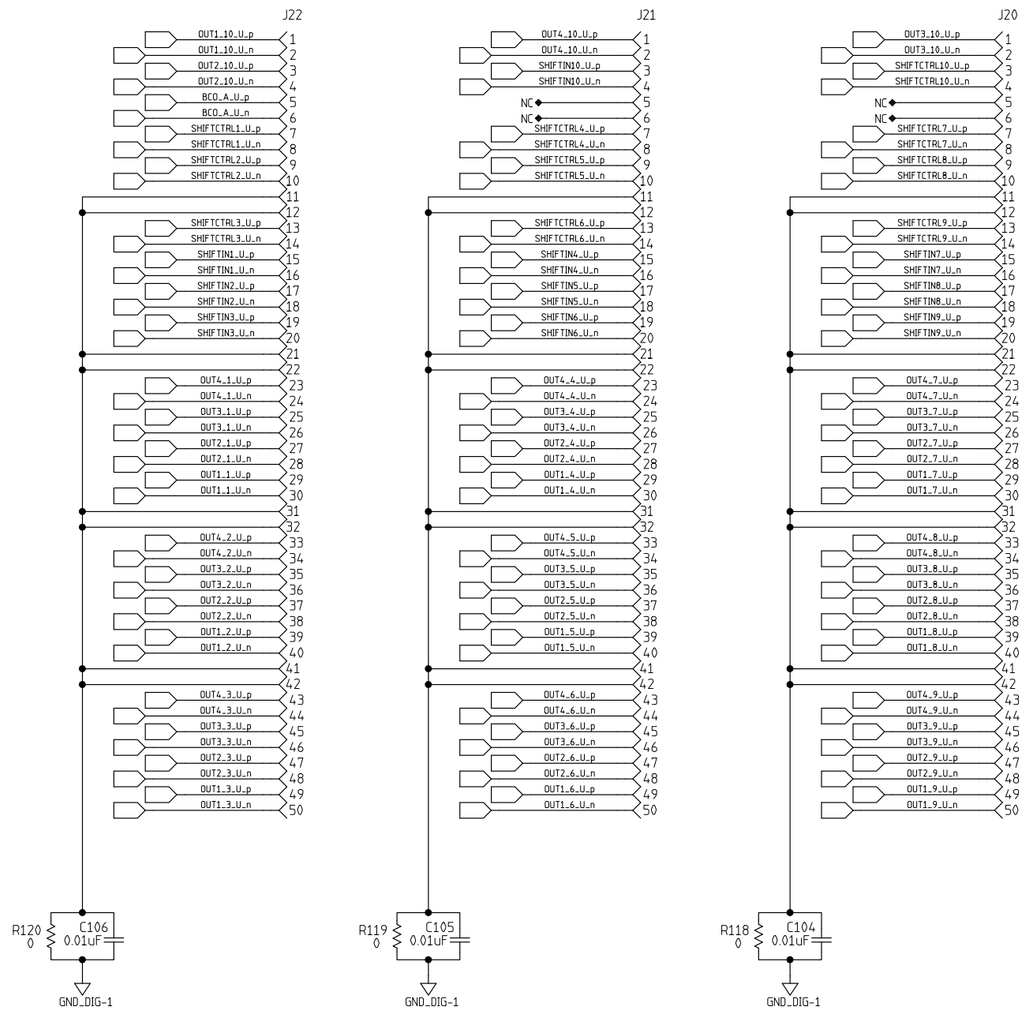

UPSTREAM, RIGHT

REVISION LETTER	CLASS REVISION	REVISIONS	DATE	CHANGE BY	CHECK BY	APPROVED BY
—		ORIGINAL ISSUE	—	—	—	—

LOS ALAMOS

LOS ALAMOS NATIONAL LABORATORY
LOS ALAMOS, NEW MEXICO 87545

MENTOR 2005

	NAME	SIGNATURE	DATE	GROUP
ORIGINATED				
DESIGNED				
DRAWN	S. CHACON	S. CHACON	JUN 2008	AOT-IC
CHECKED	M. PROKOP	M. PROKOP	JUN 2008	AOT-RFE
PROJ. ENGR.	M. PROKOP	M. PROKOP	JUN 2008	AOT-RFE
APPROVED				
RELEASED				

CLASSIFICATION OF: DRAWING: U
PART: U DRAWING: U

TITLE

(P-25)

HEAVY QUARK DETECTOR
DATA AQUISITION SYSTEM
SIGNAL CONNECTORS-STATION 2

TOLERANCE (UNLESS OTHERWISE NOTED)
X= ± ——— 0.XX= ± ——— ANGULAR ± ———
0.X= ± ——— 0.XXX= ± ——— FINISH ± ———

SCALE	NO. SHEETS	DRAWING NO.	SIZE	SHEET NO.
N/A	1	126Y-267912	D	2

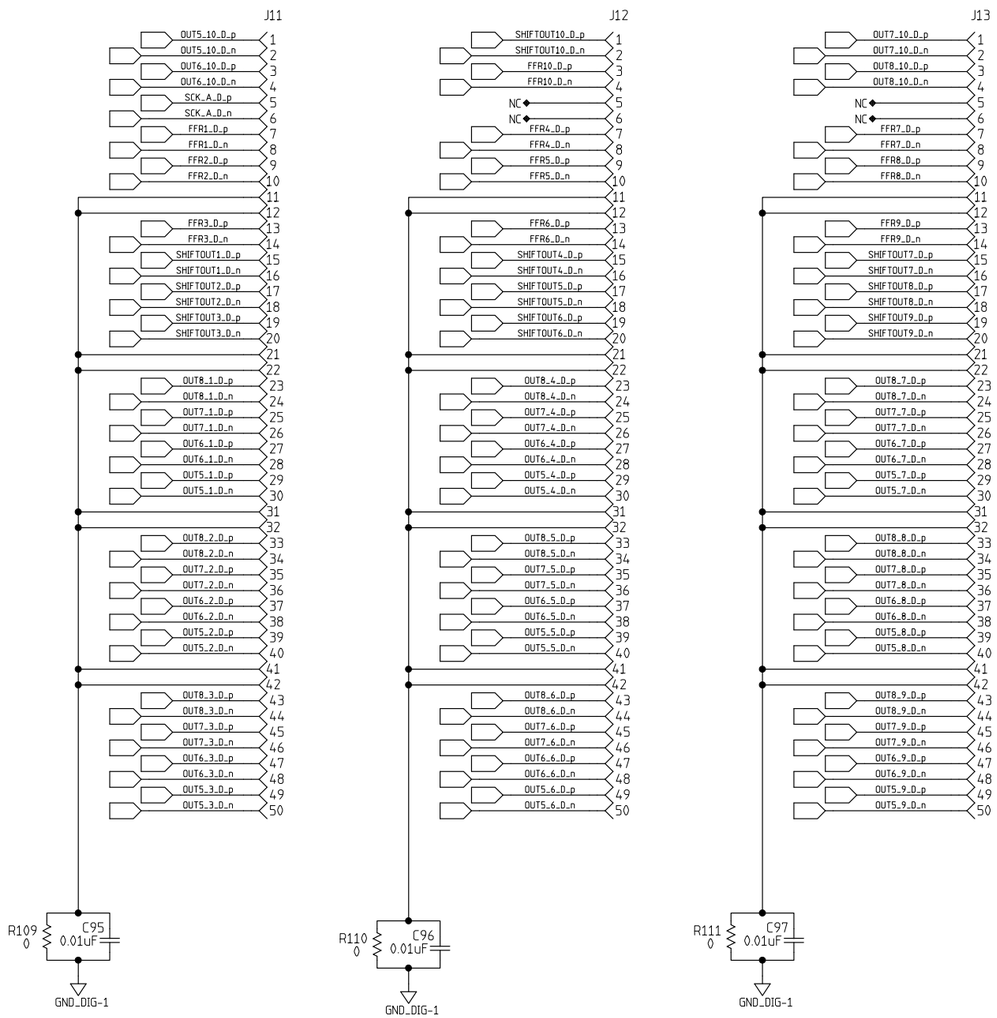

DOWNSTREAM, LEFT

REVISION LETTER	CLASS REVIEW	REVISIONS	DATE	CHANGE BY	CHECK BY	APPROVED BY
—		ORIGINAL ISSUE	—	—	—	—

LOS ALAMOS

LOS ALAMOS NATIONAL LABORATORY
LOS ALAMOS, NEW MEXICO 87545

MENTOR 2005

	NAME	SIGNATURE	DATE	GROUP
ORIGINATED				
DESIGNED				
DRAWN	S. CHACON	S. CHACON	JUN 2008	AOT-IC
CHECKED	M. PROKOP	M. PROKOP	JUN 2008	AOT-RFE
PROJ. ENGR.	M. PROKOP	M. PROKOP	JUN 2008	AOT-RFE
APPROVED				
RELEASED				

CLASSIFICATION OF DRAWING: U
PART: U DRAWING: U

TITLE

(P-25)

HEAVY QUARK DETECTOR
DATA AQUISITION SYSTEM
SIGNAL CONNECTORS-STATION 3

TOLERANCE (UNLESS OTHERWISE NOTED)
X= ± ——— 0.XX= ± ——— ANGULAR ± ———
0.X= ± ——— 0.XXX= ± ——— FINISH ± ———

SCALE	NO. SHEETS	DRAWING NO.	SIZE	SHEET NO.
N/A	1	126Y-267912	D	3

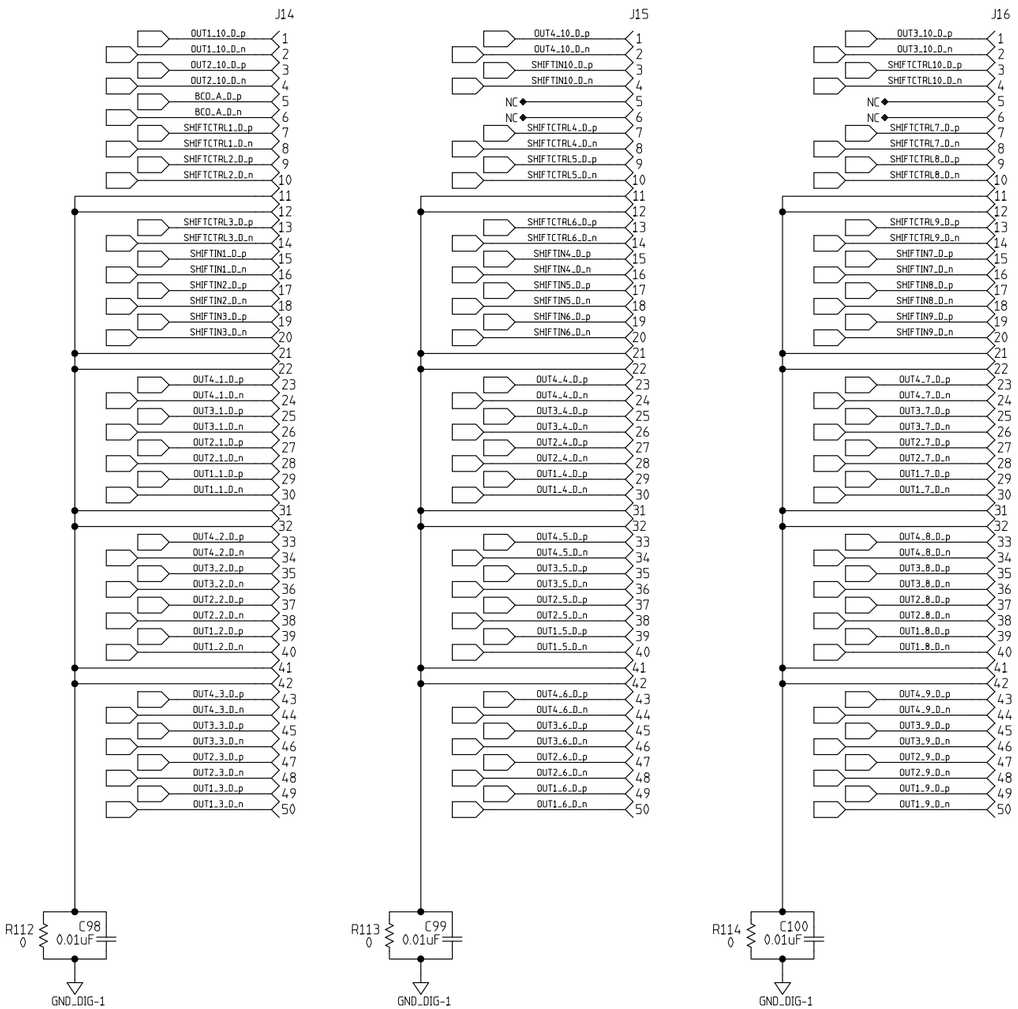

DOWNSTREAM, RIGHT

REVISION LETTER	CLASS REVIEW	REVISIONS	DATE	CHANGE BY	CHECK BY	APPROVED BY
—		ORIGINAL ISSUE	—	—	—	—

LOS ALAMOS

LOS ALAMOS NATIONAL LABORATORY
LOS ALAMOS, NEW MEXICO 87545

MENTOR 2005

	NAME	SIGNATURE	DATE	GROUP
ORIGINATED				
DESIGNED				
DRAWN	S. CHACON	S. CHACON	JUN 2008	AOT-IC
CHECKED	M. PROKOP	M. PROKOP	JUN 2008	AOT-RFE
PROJ. ENGR.	M. PROKOP	M. PROKOP	JUN 2008	AOT-RFE
APPROVED				
RELEASED				

CLASSIFICATION OF DRAWING: U
PART: U DRAWING: U

TITLE

(P-25)

HEAVY QUARK DETECTOR
DATA AQUISITION SYSTEM
SIGNAL CONNECTORS-STATION 4

TOLERANCE (UNLESS OTHERWISE NOTED)
X= ± ——— 0.XX= ± ——— ANGULAR ± ———
0.X= ± ——— 0.XXX= ± ——— FINISH ± ———

SCALE	NO. SHEETS	DRAWING NO.	SIZE	SHEET NO.
N/A	1	126Y-267912	D	4

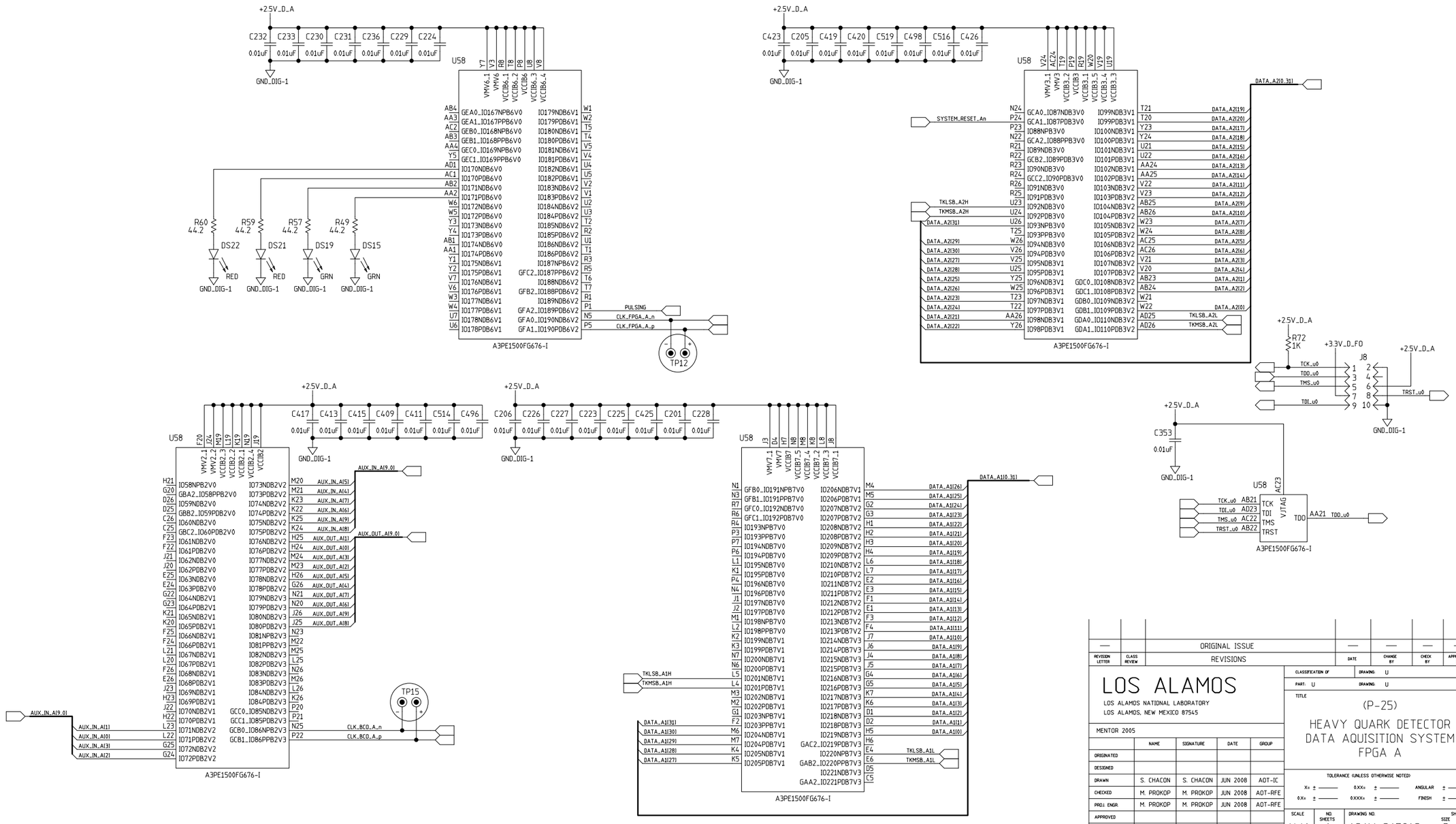

REVISION LETTER	CLASS REVIEW	REVISIONS	DATE	CHANGE BY	CHECK BY	APPROVED BY
—		ORIGINAL ISSUE	—	—	—	—

LOS ALAMOS

LOS ALAMOS NATIONAL LABORATORY
LOS ALAMOS, NEW MEXICO 87545

MENTOR 2005

	NAME	SIGNATURE	DATE	GROUP
ORIGINATED				
DESIGNED				
DRAWN	S. CHACON	S. CHACON	JUN 2008	AOT-IC
CHECKED	M. PROKOP	M. PROKOP	JUN 2008	AOT-RFE
PROJ. ENGR	M. PROKOP	M. PROKOP	JUN 2008	AOT-RFE
APPROVED				
RELEASED				

CLASSIFICATION OF: DRAWING U
PART: U DRAWING U

TITLE

(P-25)
HEAVY QUARK DETECTOR
DATA AQUISITION SYSTEM
FPGA A

TOLERANCE (UNLESS OTHERWISE NOTED)
X± ____ 0.XX± ____ ANGULAR ± ____
0.X± ____ 0.XXX± ____ FINISH ± ____

SCALE	NO. SHEETS	DRAWING NO.	SIZE	SHEET NO.
N/A	1	126Y-267912	D	5

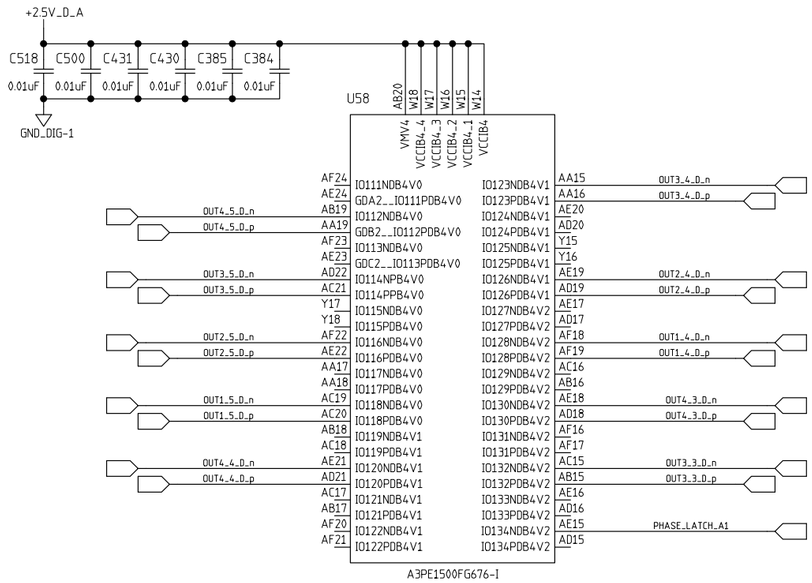

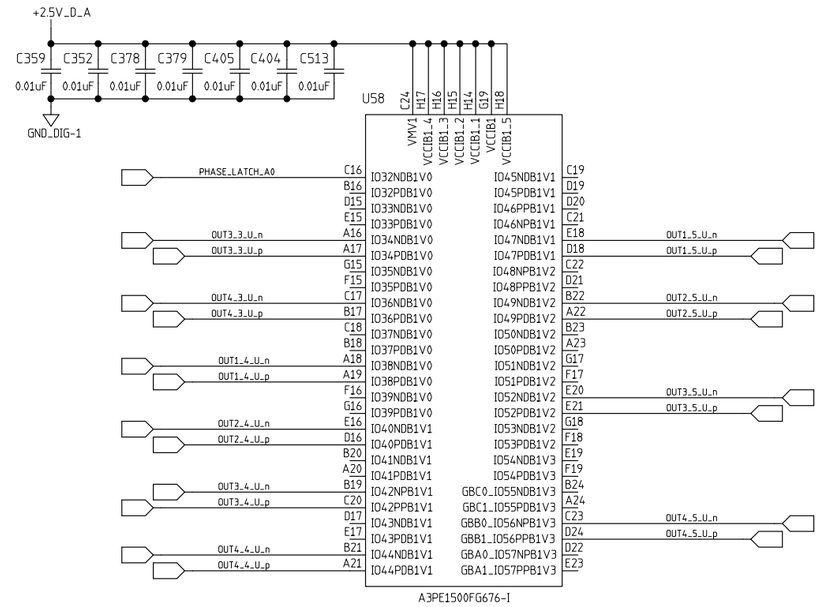

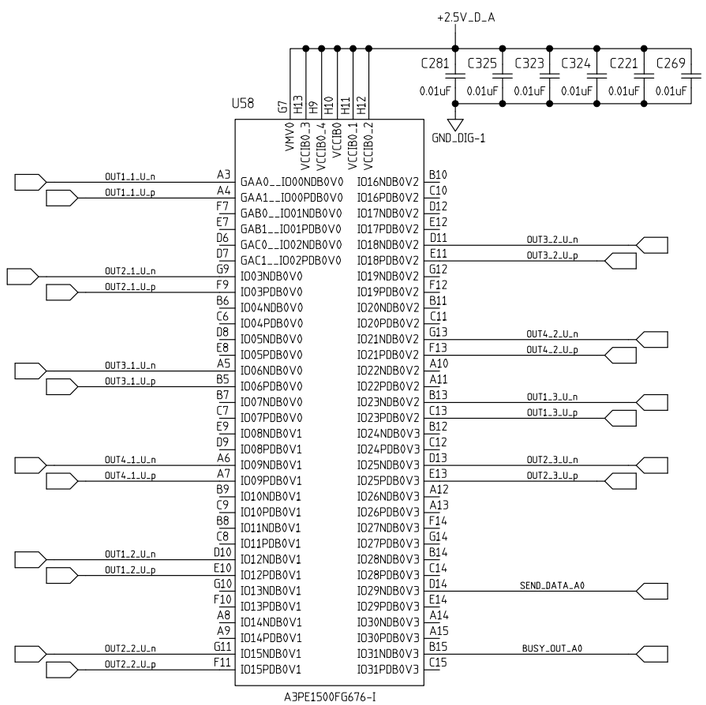

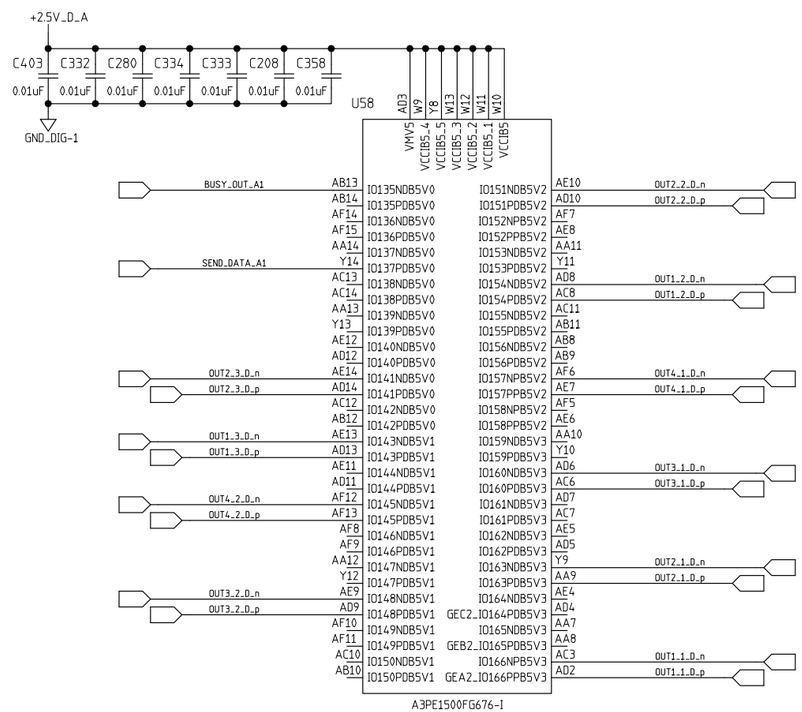

REVISION LETTER	CLASS REVIEW	REVISIONS	DATE	CHANGE BY	CHECK BY	APPROVED BY
—		ORIGINAL ISSUE	—	—	—	—

LOS ALAMOS

LOS ALAMOS NATIONAL LABORATORY
LOS ALAMOS, NEW MEXICO 87545

MENTOR 2005

	NAME	SIGNATURE	DATE	GROUP
ORIGINATED				
DESIGNED				
DRAWN	S. CHACON	S. CHACON	JUN 2008	AOT-IC
CHECKED	M. PROKOP	M. PROKOP	JUN 2008	AOT-RFE
PROJ. ENGR.	M. PROKOP	M. PROKOP	JUN 2008	AOT-RFE
APPROVED				
RELEASED				

CLASSIFICATION OF: DRAWING: U
PART: U DRAWING: U

TITLE

(P-25)

HEAVY QUARK DETECTOR
DATA AQUISITION SYSTEM
FPGA A

TOLERANCE (UNLESS OTHERWISE NOTED)
X± ± — 0.XX± ± — ANGULAR ± —
0.X± ± — 0.XXX± ± — FINISH ± —

SCALE	NO. SHEETS	DRAWING NO.	SIZE	SHEET NO.
N/A	1	126Y-267912	D	6

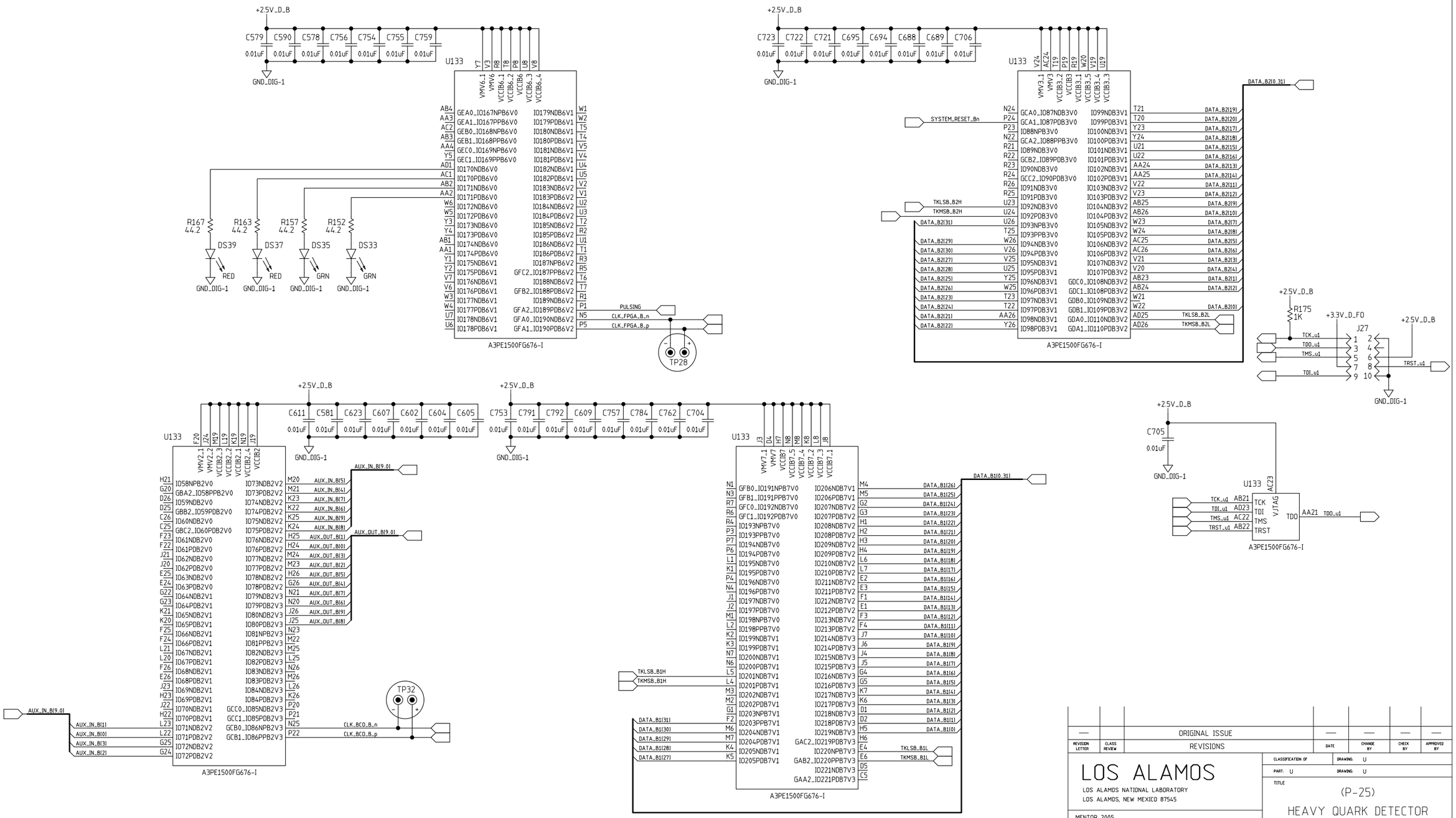

REVISION LETTER	CLASS REVIEW	REVISIONS	DATE	CHANGE BY	CHECK BY	APPROVED BY
—		ORIGINAL ISSUE	—	—	—	—

LOS ALAMOS

LOS ALAMOS NATIONAL LABORATORY
LOS ALAMOS, NEW MEXICO 87545

MENTOR 2005

	NAME	SIGNATURE	DATE	GROUP
ORIGINATED				
DESIGNED				
DRAWN	S. CHACON	S. CHACON	JUN 2008	AOT-IC
CHECKED	M. PROKOP	M. PROKOP	JUN 2008	AOT-RFE
PROJ. ENGR.	M. PROKOP	M. PROKOP	JUN 2008	AOT-RFE
APPROVED				
RELEASED				

CLASSIFICATION OF: U — DRAWING: U
PART: U — DRAWING: U

TITLE

(P-25)

HEAVY QUARK DETECTOR
DATA AQUISITION SYSTEM
FPGA B

TOLERANCE (UNLESS OTHERWISE NOTED)
X= ± ——— 0.XX= ± ——— ANGULAR ± ———
0.X= ± ——— 0.XXX= ± ——— FINISH ± ———

SCALE	NO. SHEETS	DRAWING NO.	SIZE	SHEET NO.
N/A	1	126Y-267912	D	7

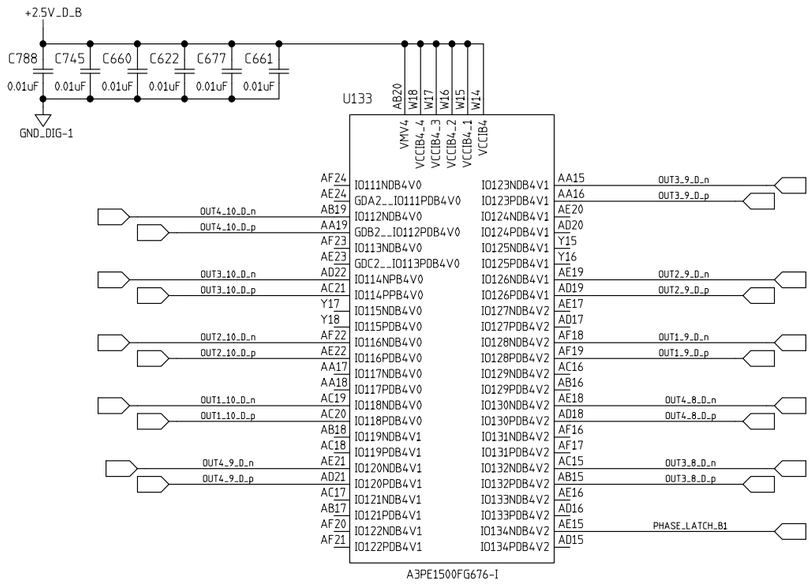

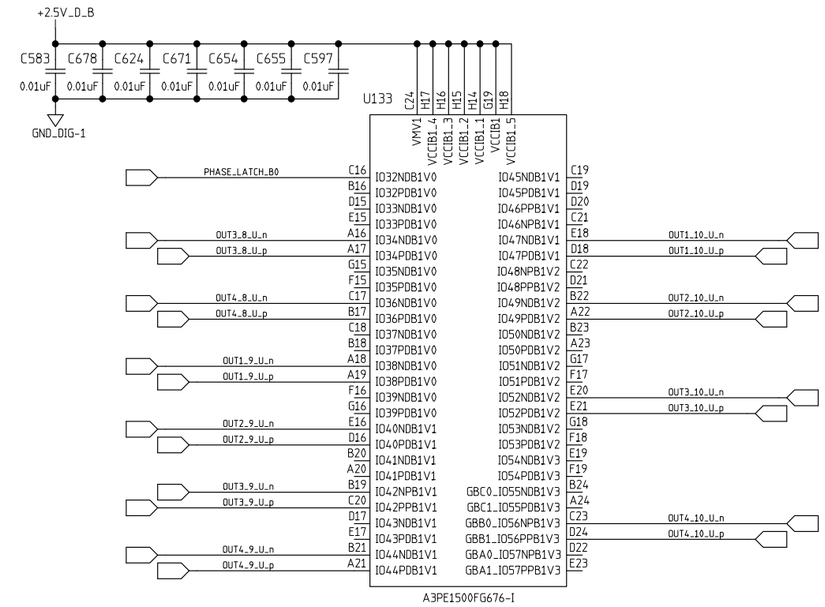

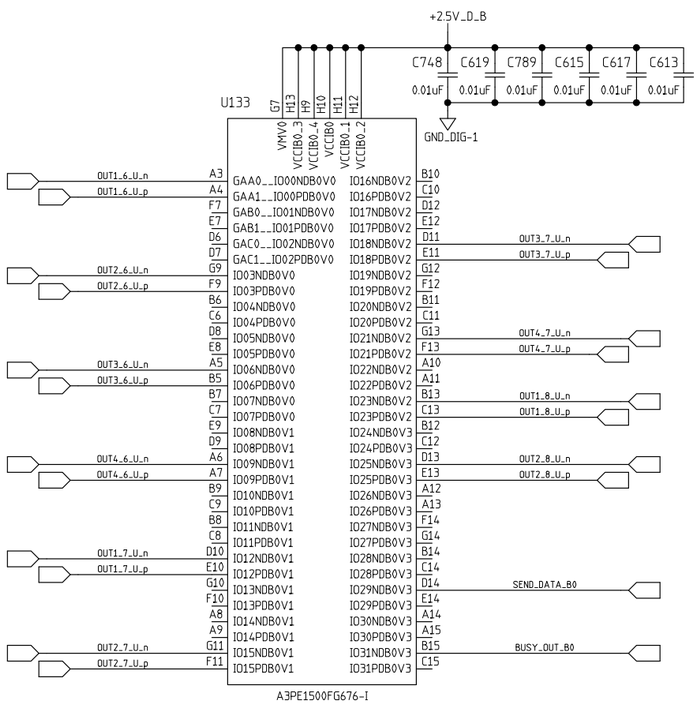

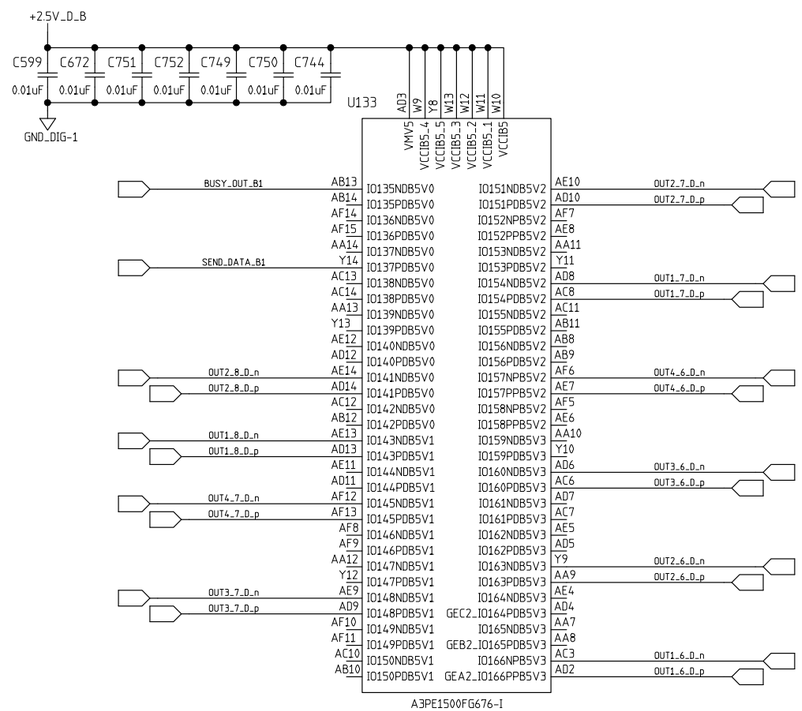

REVISION LETTER	CLASS REVIEW	REVISIONS	DATE	CHANGE BY	CHECK BY	APPROVED BY
—		ORIGINAL ISSUE	—	—	—	—

LOS ALAMOS

LOS ALAMOS NATIONAL LABORATORY
LOS ALAMOS, NEW MEXICO 87545

MENTOR 2005

	NAME	SIGNATURE	DATE	GROUP
ORIGINATED				
DESIGNED				
DRAWN	S. CHACON	S. CHACON	JUN 2008	AOT-IC
CHECKED	M. PROKOP	M. PROKOP	JUN 2008	AOT-RFE
PROJ. ENGR.	M. PROKOP	M. PROKOP	JUN 2008	AOT-RFE
APPROVED				
RELEASED				

CLASSIFICATION OF: DRAWING: U
PART: U DRAWING: U

TITLE

(P-25)

HEAVY QUARK DETECTOR
DATA AQUISITION SYSTEM
FPGA B

TOLERANCE (UNLESS OTHERWISE NOTED)
X= ± ——— 0.XX= ± ——— ANGULAR ± ———
0.X= ± ——— 0.XXX= ± ——— FINISH ± ———

SCALE	NO. SHEETS	DRAWING NO.	SIZE	SHEET NO.
N/A	1	126Y-267912	D	8

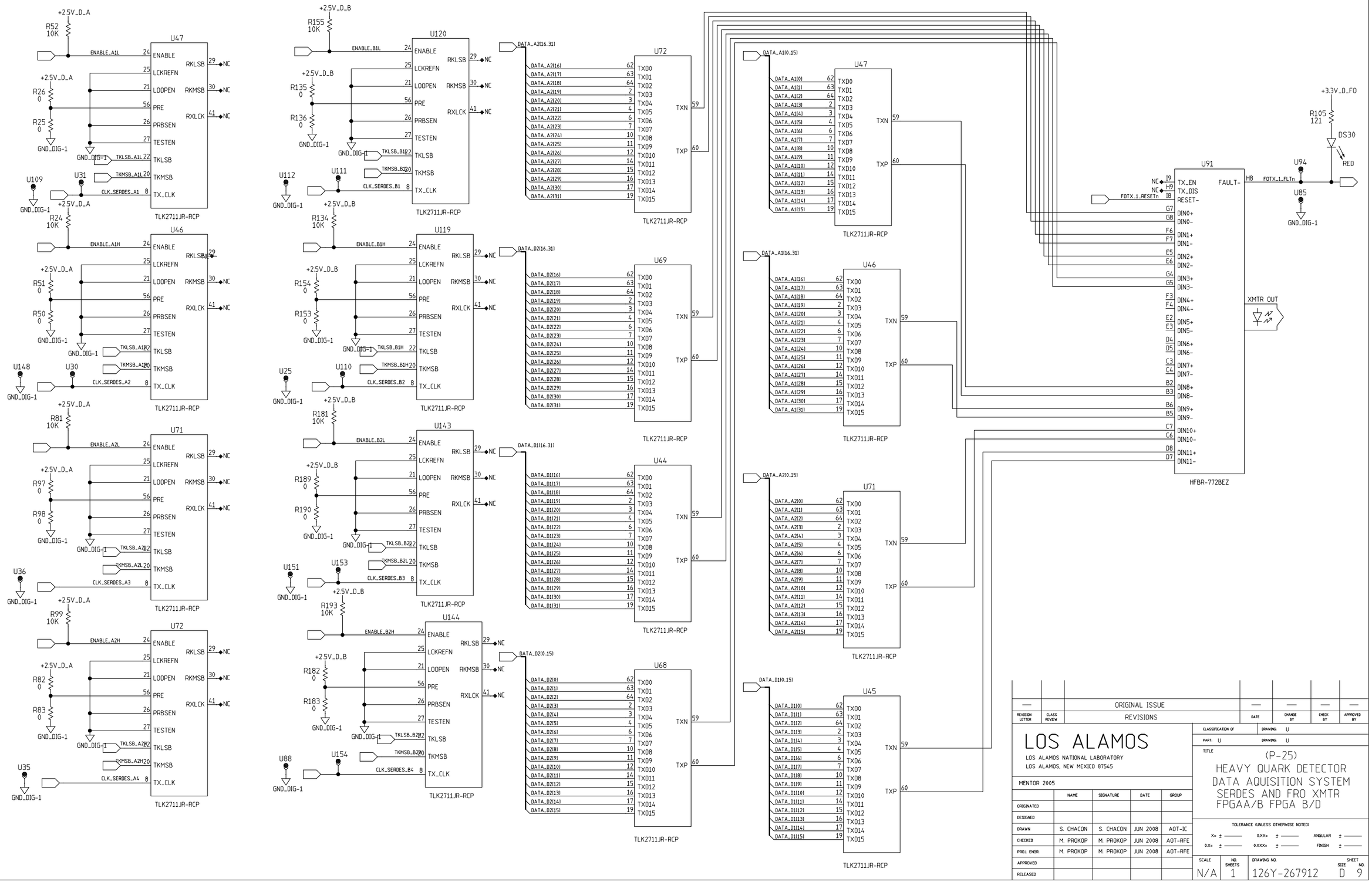

REVISION LETTER	CLASS REVIEW	REVISIONS	DATE	CHANGE BY	CHECK BY	APPROVED BY
—		ORIGINAL ISSUE	—	—	—	—

LOS ALAMOS

LOS ALAMOS NATIONAL LABORATORY
LOS ALAMOS, NEW MEXICO 87545

MENTOR 2005

	NAME	SIGNATURE	DATE	GROUP
ORIGINATED				
DESIGNED				
DRAWN	S. CHACON	S. CHACON	JUN 2008	AOT-IC
CHECKED	M. PROKOP	M. PROKOP	JUN 2008	AOT-RFE
PROJ. ENGR.	M. PROKOP	M. PROKOP	JUN 2008	AOT-RFE
APPROVED				
RELEASED				

CLASSIFICATION OF | DRAWING: U
PART: U | DRAWING: U

TITLE
(P-25)
HEAVY QUARK DETECTOR
DATA AQUISITION SYSTEM
SERDES AND FRO XMTR
FPGAA/B FPGA B/D

TOLERANCE (UNLESS OTHERWISE NOTED)
X= ± ——— 0.XX= ± ——— ANGULAR ± ———
0.X= ± ——— 0.XXX= ± ——— FINISH ± ———

SCALE	NO. SHEETS	DRAWING NO.	SIZE	SHEET NO.
N/A	1	126Y-267912	D	9

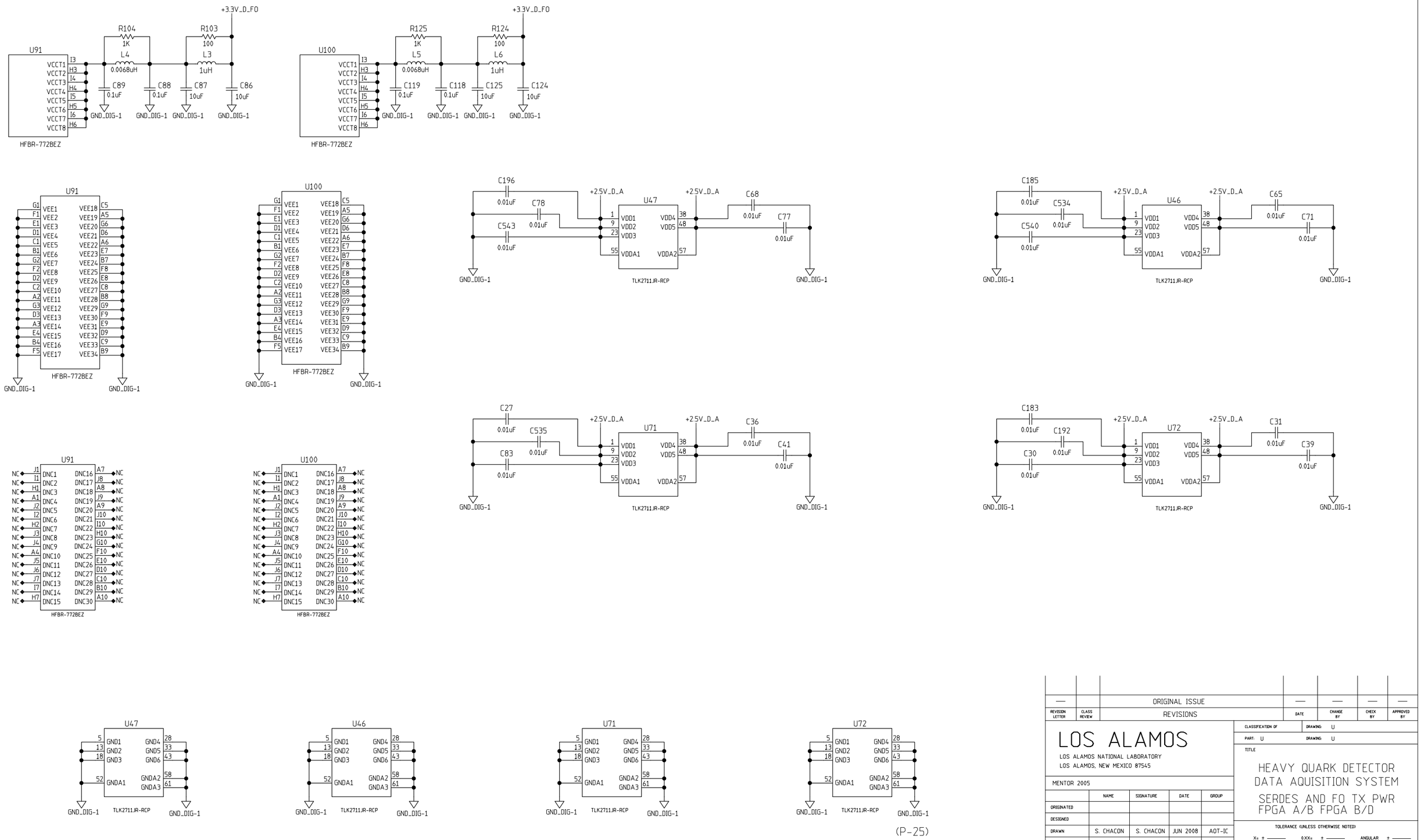

REVISION LETTER	CLASS REVIEW	REVISIONS	DATE	CHANGE BY	CHECK BY	APPROVED BY
—		ORIGINAL ISSUE	—	—	—	—

LOS ALAMOS

LOS ALAMOS NATIONAL LABORATORY
LOS ALAMOS, NEW MEXICO 87545

MENTOR 2005

CLASSIFICATION OF DRAWING: U
PART: U DRAWING: U

TITLE

HEAVY QUARK DETECTOR
DATA AQUISITION SYSTEM

SERDES AND FO TX PWR
FPGA A/B FPGA B/D

	NAME	SIGNATURE	DATE	GROUP
ORIGINATED				
DESIGNED				
DRAWN	S. CHACON	S. CHACON	JUN 2008	AOT-IC
CHECKED	M. PROKOP	M. PROKOP	JUN 2008	AOT-RFE
PROJ. ENGR.	M. PROKOP	M. PROKOP	JUN 2008	AOT-RFE
APPROVED				
RELEASED				

TOLERANCE (UNLESS OTHERWISE NOTED)
X= ± — 0.XX= ± — ANGULAR ± —
0.X= ± — 0.XXX= ± — FINISH ± —

SCALE	NO. SHEETS	DRAWING NO.	SIZE	SHEET NO.
N/A	1	126Y-267912	D	10

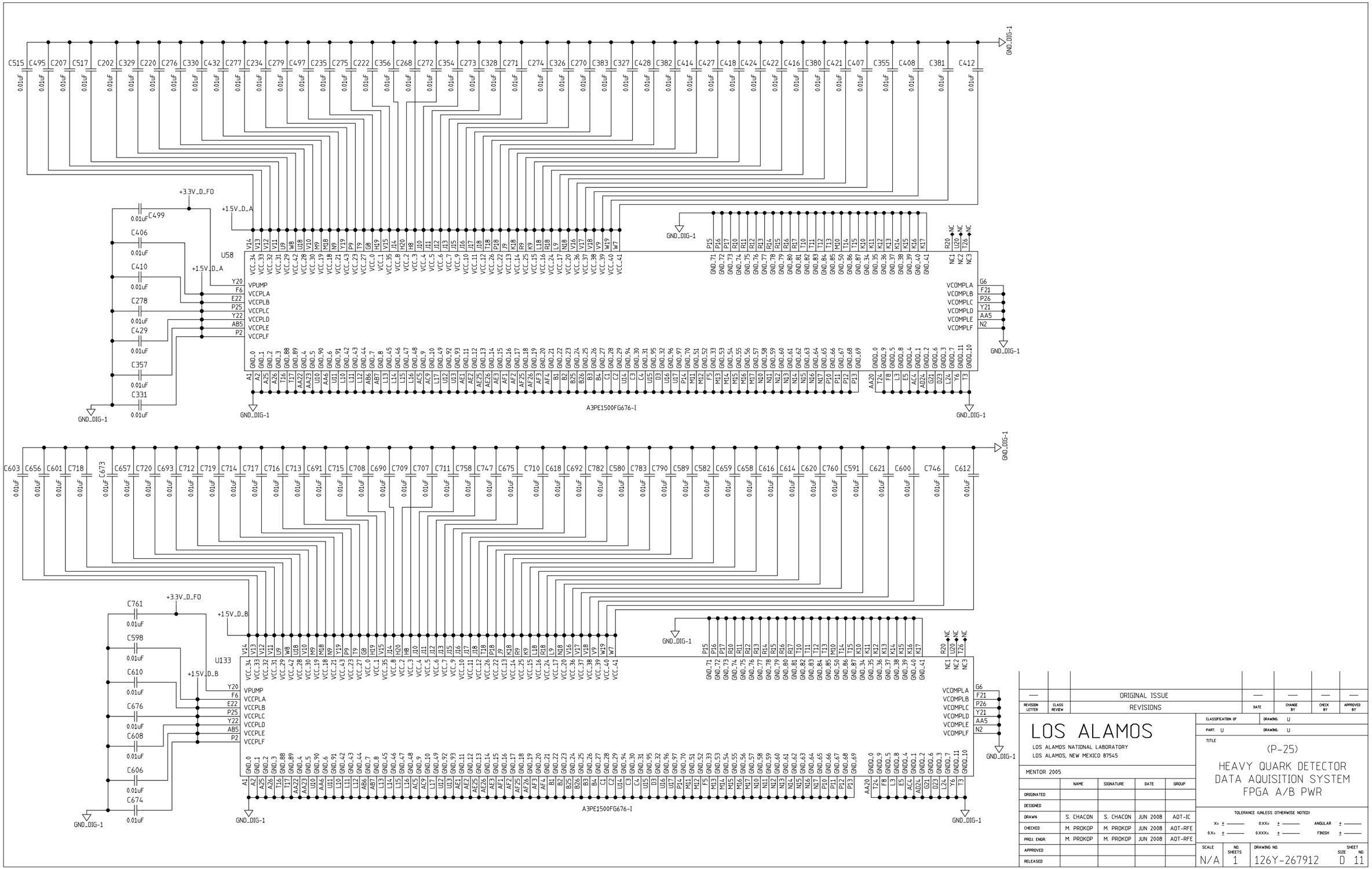

REVISION LETTER	CLASS REVIEW	REVISIONS	DATE	CHANGE BY	CHECK BY	APPROVED BY
—		ORIGINAL ISSUE	—	—	—	—

LOS ALAMOS
LOS ALAMOS NATIONAL LABORATORY
LOS ALAMOS, NEW MEXICO 87545

MENTOR 2005

	NAME	SIGNATURE	DATE	GROUP
ORIGINATED				
DESIGNED				
DRAWN	S. CHACON	S. CHACON	JUN 2008	AOT-IC
CHECKED	M. PROKOP	M. PROKOP	JUN 2008	AOT-RFE
PROJ. ENGR.	M. PROKOP	M. PROKOP	JUN 2008	AOT-RFE
APPROVED				
RELEASED				

CLASSIFICATION OF: DRAWING: U
PART: U DRAWING: U

TITLE
(P-25)
HEAVY QUARK DETECTOR
DATA AQUISITION SYSTEM
FPGA A/B PWR

TOLERANCE (UNLESS OTHERWISE NOTED)
X= ± ——— 0.XX= ± ——— ANGULAR ± ———
0.X= ± ——— 0.XXX= ± ——— FINISH ± ———

SCALE	NO. SHEETS	DRAWING NO.	SIZE	SHEET NO.
N/A	1	126Y-267912	D	11

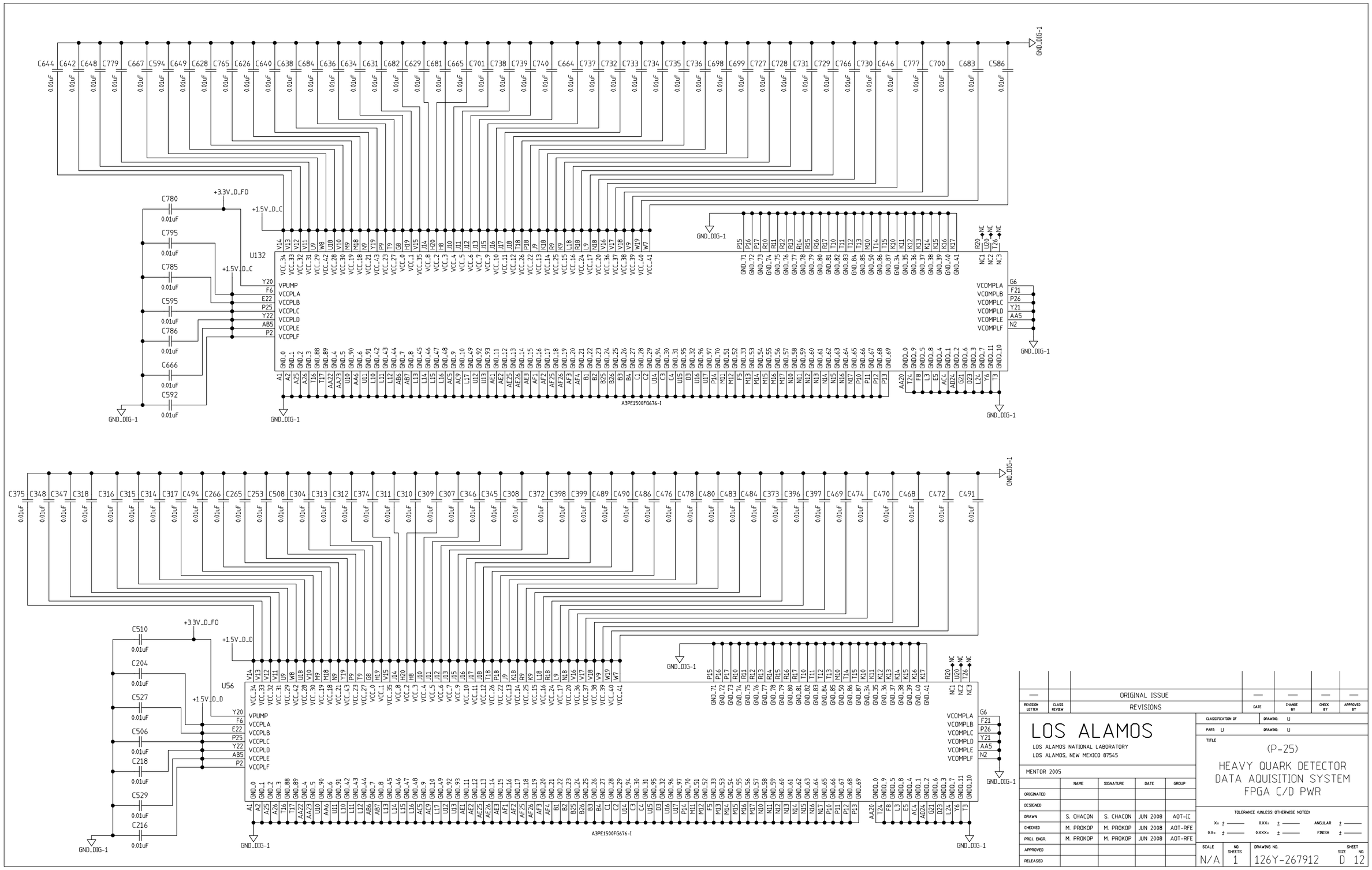

REVISION LETTER	CLASS REVIEW	REVISIONS	DATE	CHANGE BY	CHECK BY	APPROVED BY
—		ORIGINAL ISSUE	—	—	—	—

LOS ALAMOS

LOS ALAMOS NATIONAL LABORATORY
LOS ALAMOS, NEW MEXICO 87545

MENTOR 2005

	NAME	SIGNATURE	DATE	GROUP
ORIGINATED				
DESIGNED				
DRAWN	S. CHACON	S. CHACON	JUN 2008	AOT-IC
CHECKED	M. PROKOP	M. PROKOP	JUN 2008	AOT-RFE
PROJ. ENGR.	M. PROKOP	M. PROKOP	JUN 2008	AOT-RFE
APPROVED				
RELEASED				

CLASSIFICATION OF: DRAWING: U
PART: U DRAWING: U

TITLE

(P-25)
HEAVY QUARK DETECTOR
DATA AQUISITION SYSTEM
FPGA C/D PWR

TOLERANCE (UNLESS OTHERWISE NOTED)
X= ± ——— 0.XX= ± ——— ANGULAR ± ———
0.X= ± ——— 0.XXX= ± ——— FINISH ± ———

SCALE	NO. SHEETS	DRAWING NO.	SIZE	SHEET NO.
N/A	1	126Y-267912	D	12

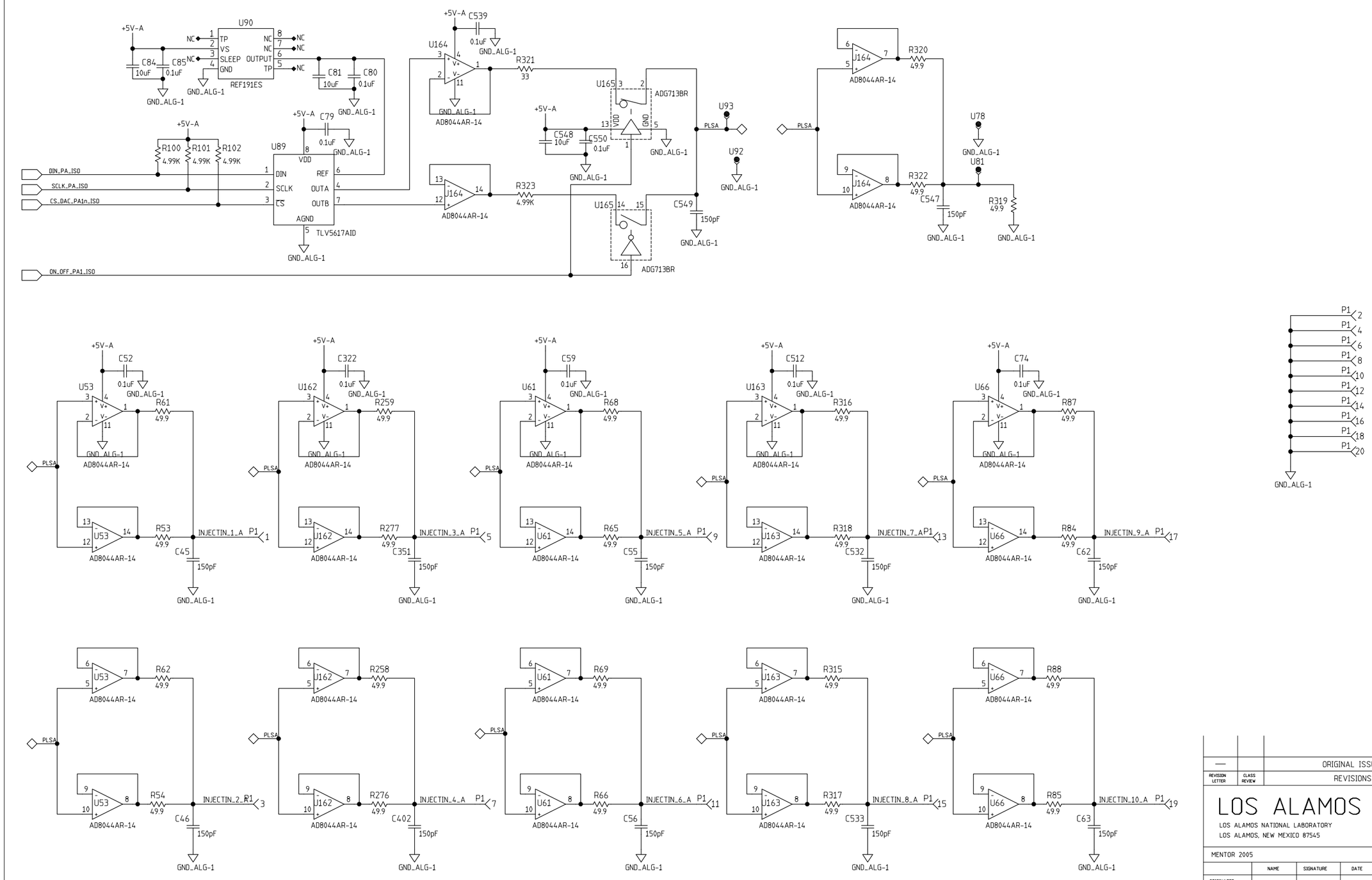

REVISION LETTER	CLASS REVIEW	REVISIONS	DATE	CHANGE BY	CHECK BY	APPROVED BY
—		ORIGINAL ISSUE	—	—	—	—

LOS ALAMOS

LOS ALAMOS NATIONAL LABORATORY
LOS ALAMOS, NEW MEXICO 87545

MENTOR 2005

	NAME	SIGNATURE	DATE	GROUP
ORIGINATED				
DESIGNED				
DRAWN	S. CHACON	S. CHACON	JUN 2008	AOT-IC
CHECKED	M. PROKOP	M. PROKOP	JUN 2008	AOT-RFE
PROJ. ENGR.	M. PROKOP	M. PROKOP	JUN 2008	AOT-RFE
APPROVED				
RELEASED				

CLASSIFICATION OF: DRAWING: U
PART: U DRAWING: U

TITLE

(P-25)

HEAVY QUARK DETECTOR
DATA AQUISITION SYSTEM
CALIB. PULSER A

TOLERANCE (UNLESS OTHERWISE NOTED)
X= ± ——— 0.XX= ± ——— ANGULAR ± ———
0.X= ± ——— 0.XXX= ± ——— FINISH ± ———

SCALE	NO. SHEETS	DRAWING NO.	SIZE	SHEET NO.
N/A	1	126Y-267912	D	13

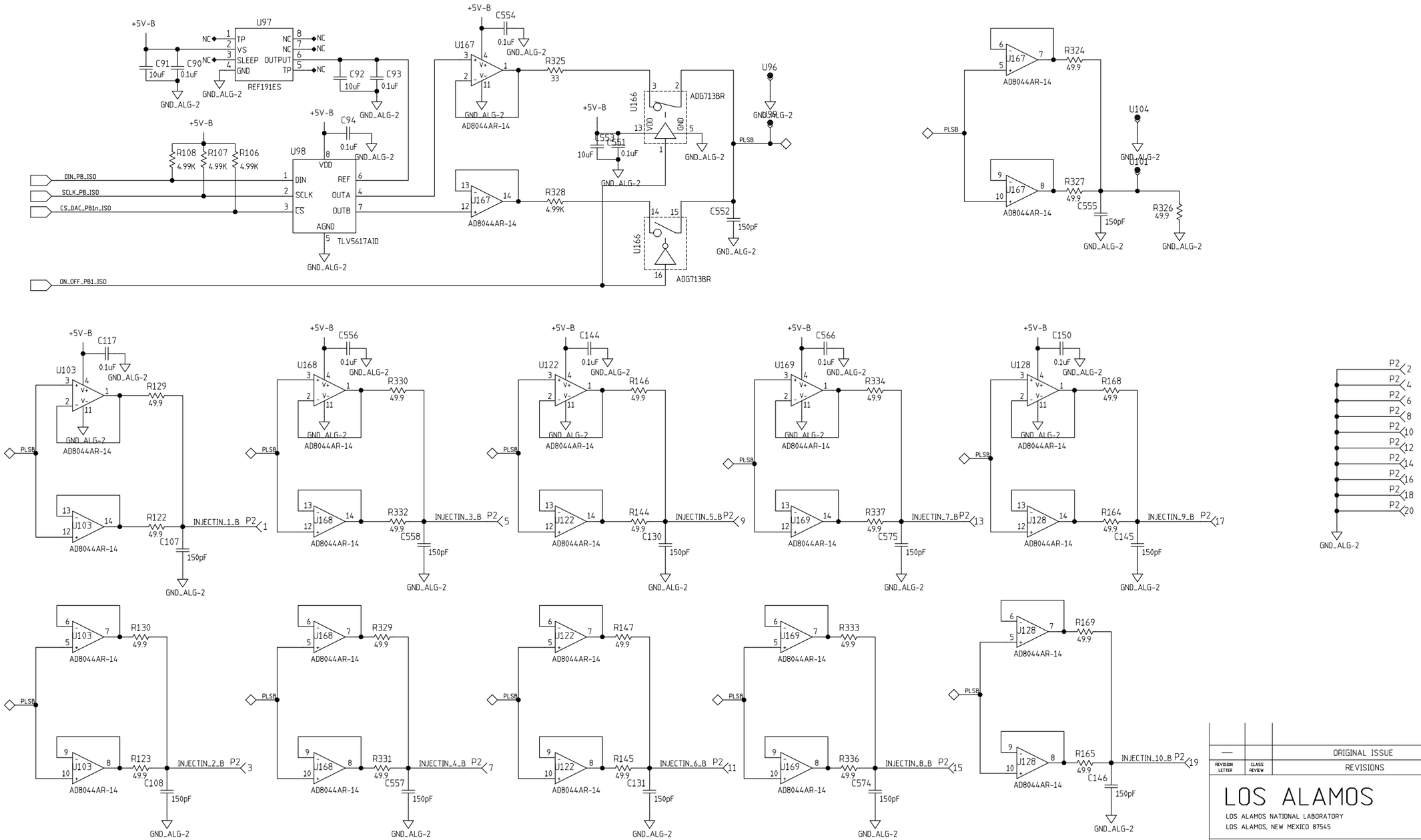

REVISION LETTER	CLASS REVIEW	REVISIONS	DATE	CHANGE BY	CHECK BY	APPROVED BY
—		ORIGINAL ISSUE	—	—	—	—

LOS ALAMOS

LOS ALAMOS NATIONAL LABORATORY
LOS ALAMOS, NEW MEXICO 87545

MENTOR 2005

	NAME	SIGNATURE	DATE	GROUP
ORIGINATED				
DESIGNED				
DRAWN	S. CHACON	S. CHACON	JUN 2008	AOT-IC
CHECKED	M. PROKOP	M. PROKOP	JUN 2008	AOT-RFE
PROJ. ENGR.	M. PROKOP	M. PROKOP	JUN 2008	AOT-RFE
APPROVED				
RELEASED				

CLASSIFICATION OF: DRAWING: U
PART: U DRAWING: U

TITLE

(P-25)

HEAVY QUARK DETECTOR
DATA AQUISITION SYSTEM
CALIB. PULSER B

TOLERANCE (UNLESS OTHERWISE NOTED)
X= ± — 0.XX= ± — ANGULAR ± —
0.X= ± — 0.XXX= ± — FINISH ± —

SCALE	NO. SHEETS	DRAWING NO.	SHEET SIZE	SHEET NO.
N/A	1	126Y-267912	D	14

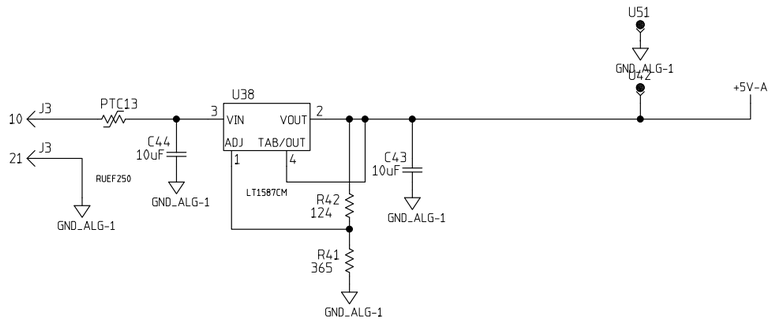

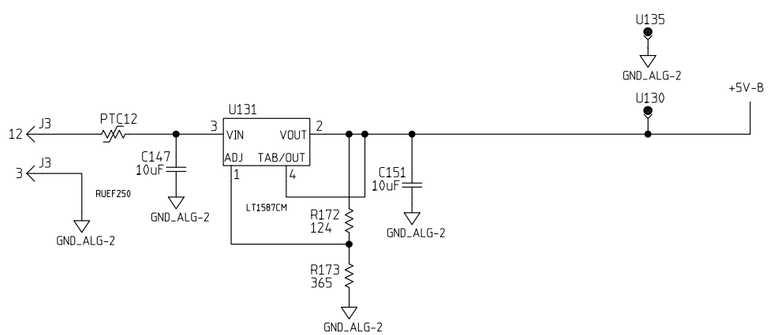

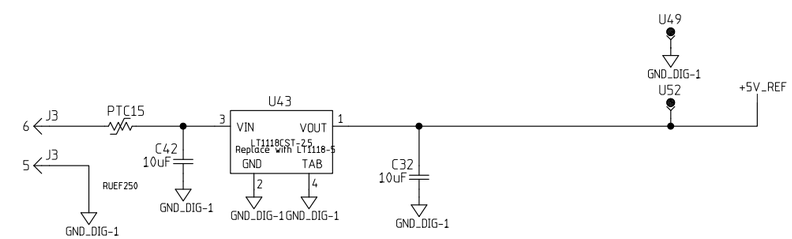

REVISION LETTER	CLASS REVIEW	REVISIONS	DATE	CHANGE BY	CHECK BY	APPROVED BY
—		ORIGINAL ISSUE	—	—	—	—

LOS ALAMOS

LOS ALAMOS NATIONAL LABORATORY
LOS ALAMOS, NEW MEXICO 87545

MENTOR 2005

	NAME	SIGNATURE	DATE	GROUP
ORIGINATED				
DESIGNED				
DRAWN	S. CHACON	S. CHACON	JUN 2008	AOT-IC
CHECKED	M. PROKOP	M. PROKOP	JUN 2008	AOT-RFE
PROJ. ENGR.	M. PROKOP	M. PROKOP	JUN 2008	AOT-RFE
APPROVED				
RELEASED				

CLASSIFICATION OF: DRAWING: U

PART: U DRAWING: U

TITLE

(P-25)

HEAVY QUARK DETECTOR
DATA AQUISITION SYSTEM
+5V POWER

TOLERANCE (UNLESS OTHERWISE NOTED)

X= ± ——— 0.XX= ± ——— ANGULAR ± ———
0.X= ± ——— 0.XXX= ± ——— FINISH ± ———

SCALE	NO. SHEETS	DRAWING NO.	SIZE	SHEET NO.
N/A	1	126Y-267912	D	15

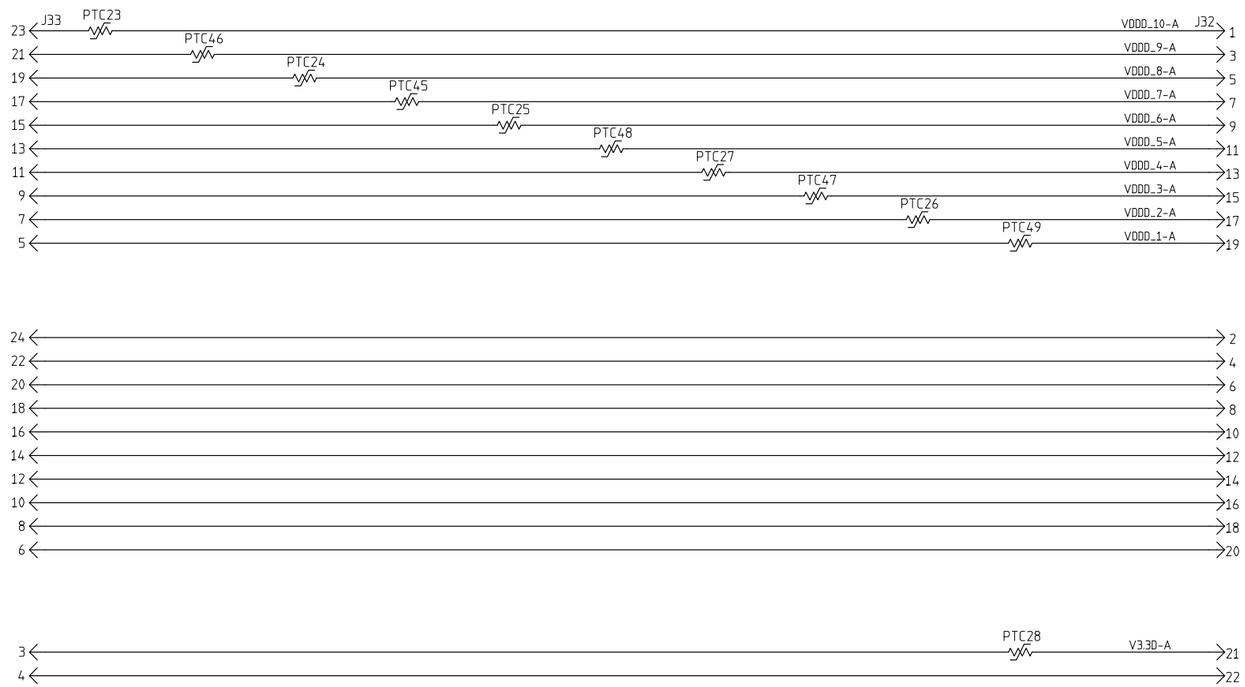

REVISION LETTER	CLASS REVIEW	REVISIONS	DATE	CHANGE BY	CHECK BY	APPROVED BY
—		ORIGINAL ISSUE	—	—	—	—

LOS ALAMOS

LOS ALAMOS NATIONAL LABORATORY
LOS ALAMOS, NEW MEXICO 87545

MENTOR 2005

	NAME	SIGNATURE	DATE	GROUP
ORIGINATED				
DESIGNED				
DRAWN	S. CHACON	S. CHACON	JUN 2008	AOT-IC
CHECKED	M. PROKOP	M. PROKOP	JUN 2008	AOT-RFE
PROJ. ENGR.	M. PROKOP	M. PROKOP	JUN 2008	AOT-RFE
APPROVED				
RELEASED				

CLASSIFICATION OF DRAWING: U
PART: U DRAWING: U

TITLE

(P-25)

HEAVY QUARK DETECTOR
DATA AQUISITION SYSTEM
CALIB. PULSER/PWR SUPPLY

TOLERANCE (UNLESS OTHERWISE NOTED)
X= ± ——— 0.XX= ± ——— ANGULAR ± ———
0.X= ± ——— 0.XXX= ± ——— FINISH ± ———

SCALE	NO. SHEETS	DRAWING NO.	SIZE	SHEET NO.
N/A	1	126Y-267912	D	16

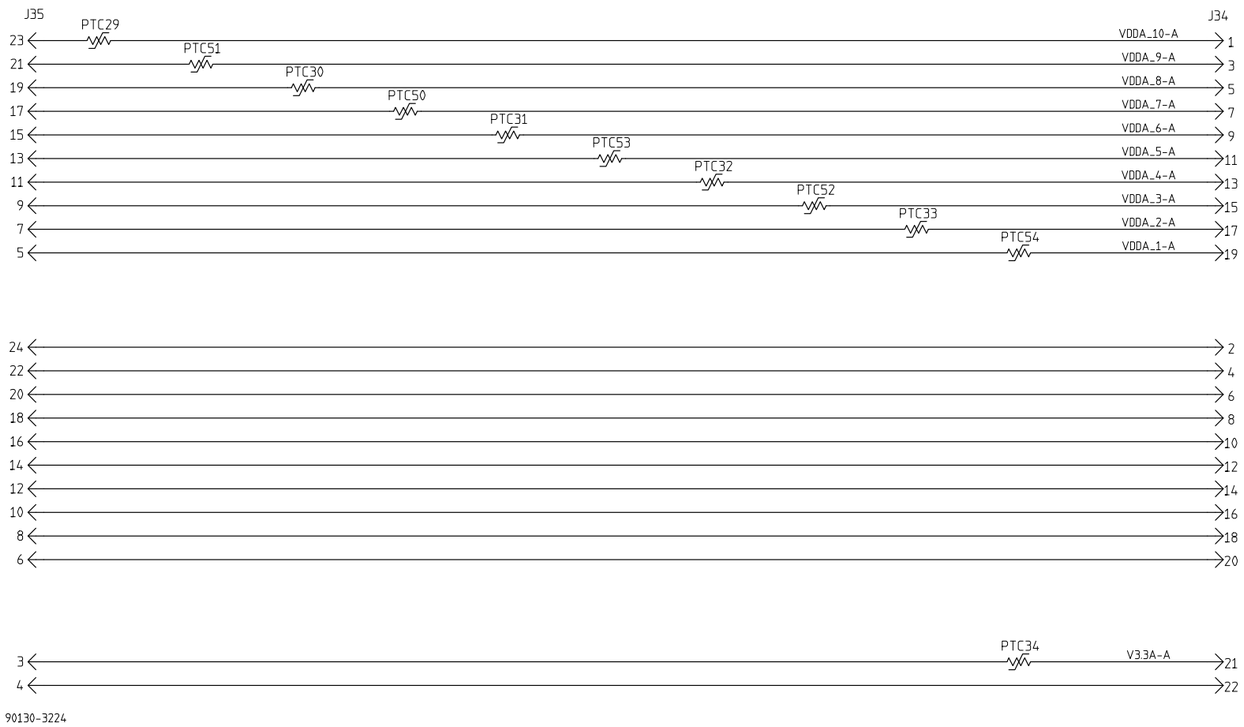

90130-3224

REVISION LETTER	CLASS REVIEW	REVISIONS	DATE	CHANGE BY	CHECK BY	APPROVED BY
—		ORIGINAL ISSUE	—	—	—	—

LOS ALAMOS

LOS ALAMOS NATIONAL LABORATORY
LOS ALAMOS, NEW MEXICO 87545

MENTOR 2005

	NAME	SIGNATURE	DATE	GROUP
ORIGINATED				
DESIGNED				
DRAWN	S. CHACON	S. CHACON	JUN 2008	AOT-IC
CHECKED	M. PROKOP	M. PROKOP	JUN 2008	AOT-RFE
PROJ. ENGR.	M. PROKOP	M. PROKOP	JUN 2008	AOT-RFE
APPROVED				
RELEASED				

CLASSIFICATION OF DRAWING: U
PART: U DRAWING: U

TITLE

(P-25)

HEAVY QUARK DETECTOR
DATA AQUISITION SYSTEM
CALIB. PULSER/PWR SUPPLY

TOLERANCE (UNLESS OTHERWISE NOTED)

X= ± ——— 0.XX= ± ——— ANGULAR ± ———
0.X= ± ——— 0.XXX= ± ——— FINISH ± ———

SCALE	NO. SHEETS	DRAWING NO.	SIZE	SHEET NO.
N/A	1	126Y-267912	D	17

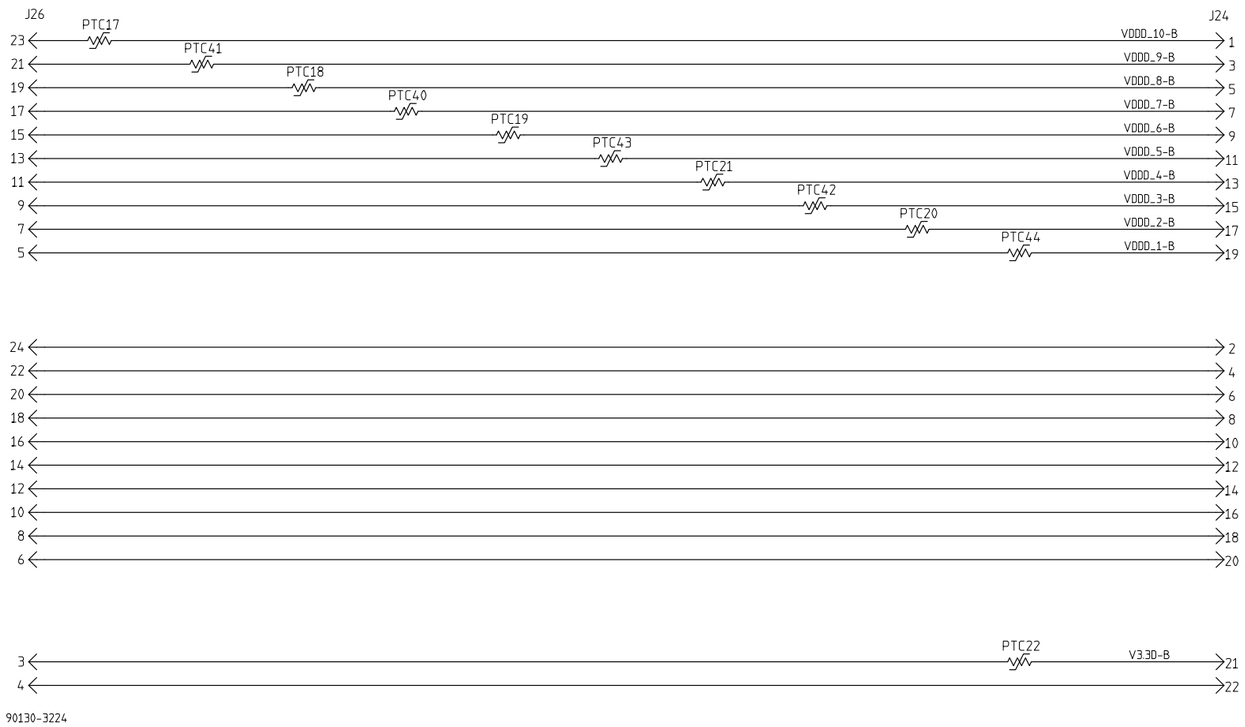

90130-3224

REVISION LETTER	CLASS REVIEW	REVISIONS	DATE	CHANGE BY	CHECK BY	APPROVED BY
—		ORIGINAL ISSUE	—	—	—	—

LOS ALAMOS

LOS ALAMOS NATIONAL LABORATORY
LOS ALAMOS, NEW MEXICO 87545

MENTOR 2005

	NAME	SIGNATURE	DATE	GROUP
ORIGINATED				
DESIGNED				
DRAWN	S. CHACON	S. CHACON	JUN 2008	AOT-IC
CHECKED	M. PROKOP	M. PROKOP	JUN 2008	AOT-RFE
PROJ. ENGR.	M. PROKOP	M. PROKOP	JUN 2008	AOT-RFE
APPROVED				
RELEASED				

CLASSIFICATION OF DRAWING: U

PART: U DRAWING: U

TITLE

(P-25)

HEAVY QUARK DETECTOR
DATA AQUISITION SYSTEM
CALIB. PULSER/PWR SUPPLY

TOLERANCE (UNLESS OTHERWISE NOTED)

X= ± ——— 0.XX= ± ——— ANGULAR ± ———
0.X= ± ——— 0.XXX= ± ——— FINISH ± ———

SCALE	NO. SHEETS	DRAWING NO.	SIZE	SHEET NO.
N/A	1	126Y-267912	D	18

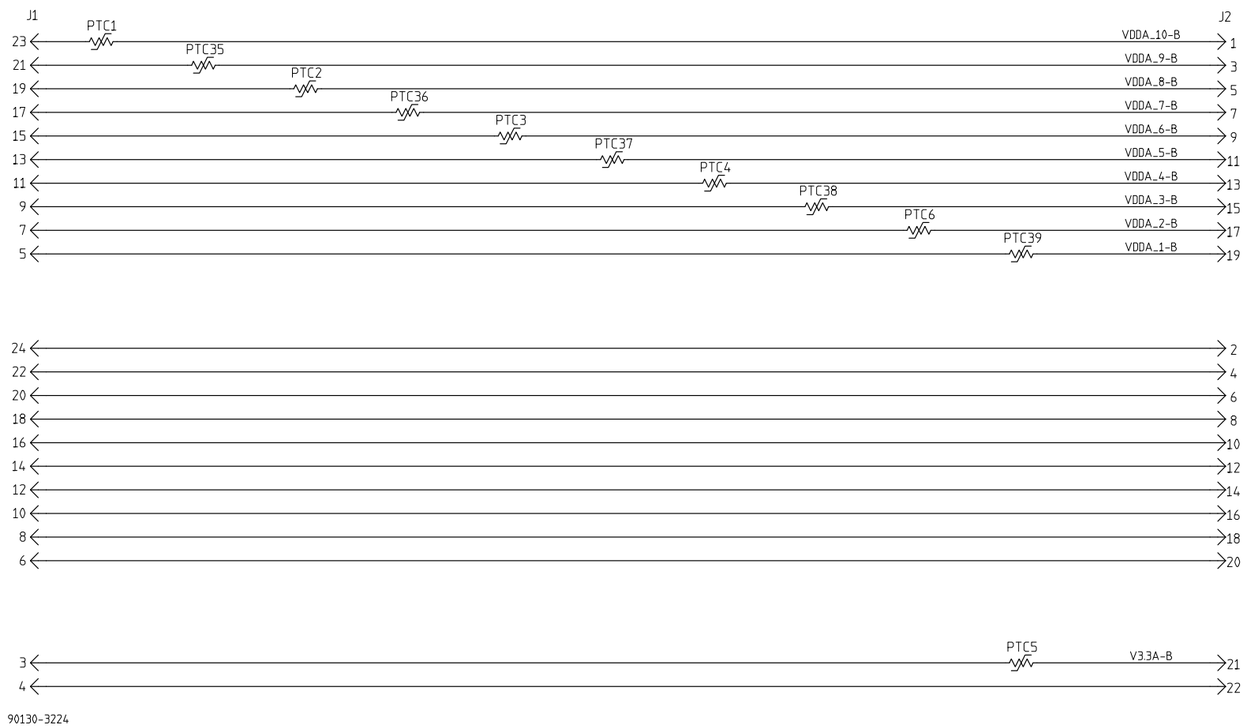

REVISION LETTER	CLASS REVIEW	REVISIONS	DATE	CHANGE BY	CHECK BY	APPROVED BY
—		ORIGINAL ISSUE	—	—	—	—

LOS ALAMOS

LOS ALAMOS NATIONAL LABORATORY
LOS ALAMOS, NEW MEXICO 87545

MENTOR 2005

	NAME	SIGNATURE	DATE	GROUP
ORIGINATED				
DESIGNED				
DRAWN	S. CHACON	S. CHACON	JUN 2008	AOT-IC
CHECKED	M. PROKOP	M. PROKOP	JUN 2008	AOT-RFE
PROJ. ENGR.	M. PROKOP	M. PROKOP	JUN 2008	AOT-RFE
APPROVED				
RELEASED				

CLASSIFICATION OF: DRAWING: U
PART: U DRAWING: U

TITLE

(P-25)

HEAVY QUARK DETECTOR
DATA AQUISITION SYSTEM
CALIB. PULSER/PWR SUPPLY

TOLERANCE (UNLESS OTHERWISE NOTED)
X= ± ——— 0.XX= ± ——— ANGULAR ± ———
0.X= ± ——— 0.XXX= ± ——— FINISH ± ———

SCALE	NO. SHEETS	DRAWING NO.	SIZE	SHEET NO.
N/A	1	126Y-267912	D	19

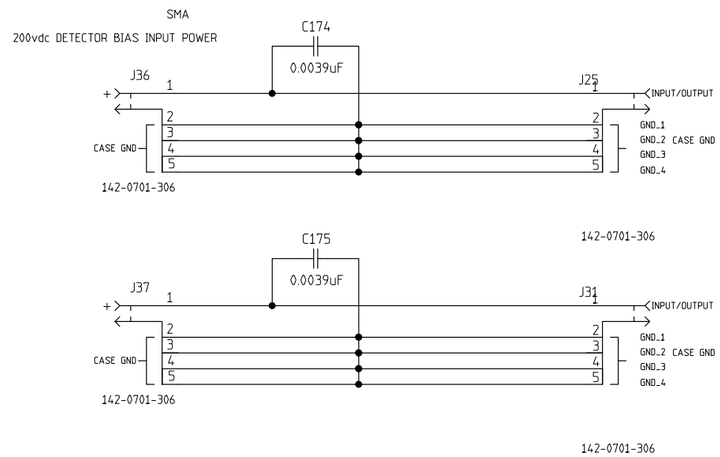

REVISION LETTER	CLASS REVIEW	REVISIONS	DATE	CHANGE BY	CHECK BY	APPROVED BY
—		ORIGINAL ISSUE	—	—	—	—

LOS ALAMOS

LOS ALAMOS NATIONAL LABORATORY
LOS ALAMOS, NEW MEXICO 87545

MENTOR 2005

	NAME	SIGNATURE	DATE	GROUP
ORIGINATED				
DESIGNED				
DRAWN	S. CHACON	S. CHACON	JUN 2008	AOT-IC
CHECKED	M. PROKOP	M. PROKOP	JUN 2008	AOT-RFE
PROJ. ENGR.	M. PROKOP	M. PROKOP	JUN 2008	AOT-RFE
APPROVED				
RELEASED				

CLASSIFICATION OF DRAWING: U

PART: U DRAWING: U

TITLE

(P-25)

HEAVY QUARK DETECTOR
DATA AQUISITION SYSTEM
CALIB. PULSER/PWR SUPPLY

TOLERANCE (UNLESS OTHERWISE NOTED)

X= ± ——— 0.XX= ± ——— ANGULAR ± ———
0.X= ± ——— 0.XXX= ± ——— FINISH ± ———

SCALE	NO. SHEETS	DRAWING NO.	SIZE	SHEET NO.
N/A	1	126Y-267912	D	20

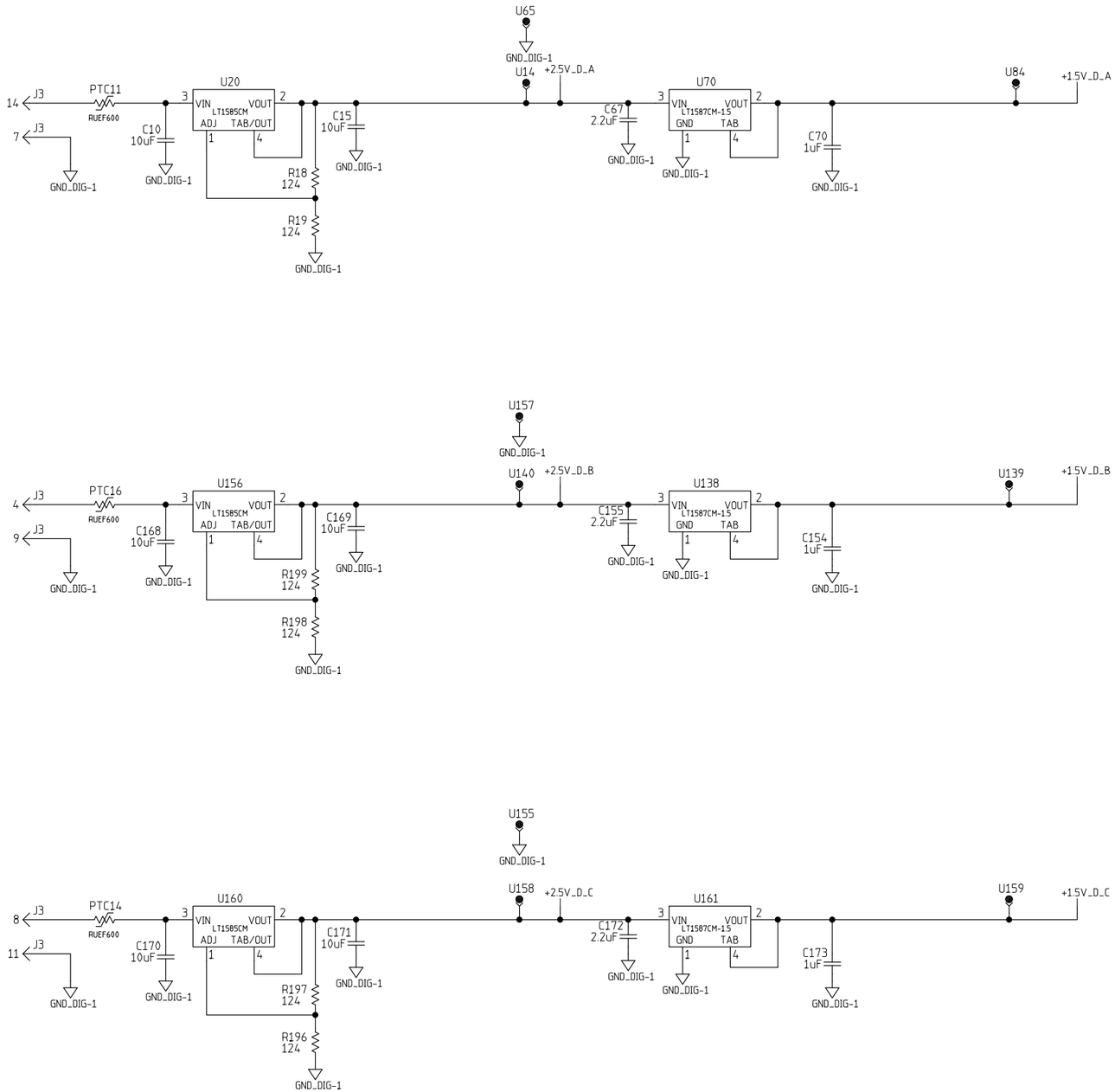

—		ORIGINAL ISSUE	—	—	—	—
REVISION LETTER	CLASS REVIEW	REVISIONS	DATE	CHANGE BY	CHECK BY	APPROVED BY

LOS ALAMOS

LOS ALAMOS NATIONAL LABORATORY
LOS ALAMOS, NEW MEXICO 87545

MENTOR 2005

	NAME	SIGNATURE	DATE	GROUP
ORIGINATED				
DESIGNED				
DRAWN	S. CHACON	S. CHACON	JUN 2008	AOT-IC
CHECKED	M. PROKOP	M. PROKOP	JUN 2008	AOT-RFE
PROJ. ENGR.	M. PROKOP	M. PROKOP	JUN 2008	AOT-RFE
APPROVED				
RELEASED				

CLASSIFICATION OF DRAWING: U
PART: U DRAWING: U

TITLE

(P-25)

HEAVY QUARK DETECTOR
DATA AQUISITION SYSTEM
FPGA / PWR SUPPLY

TOLERANCE (UNLESS OTHERWISE NOTED)
X= ± — 0.XX= ± — ANGULAR ± —
0.X= ± — 0.XXX= ± — FINISH ± —

SCALE	NO. SHEETS	DRAWING NO.	SIZE	SHEET NO.
N/A	1	126Y-267912	D	21

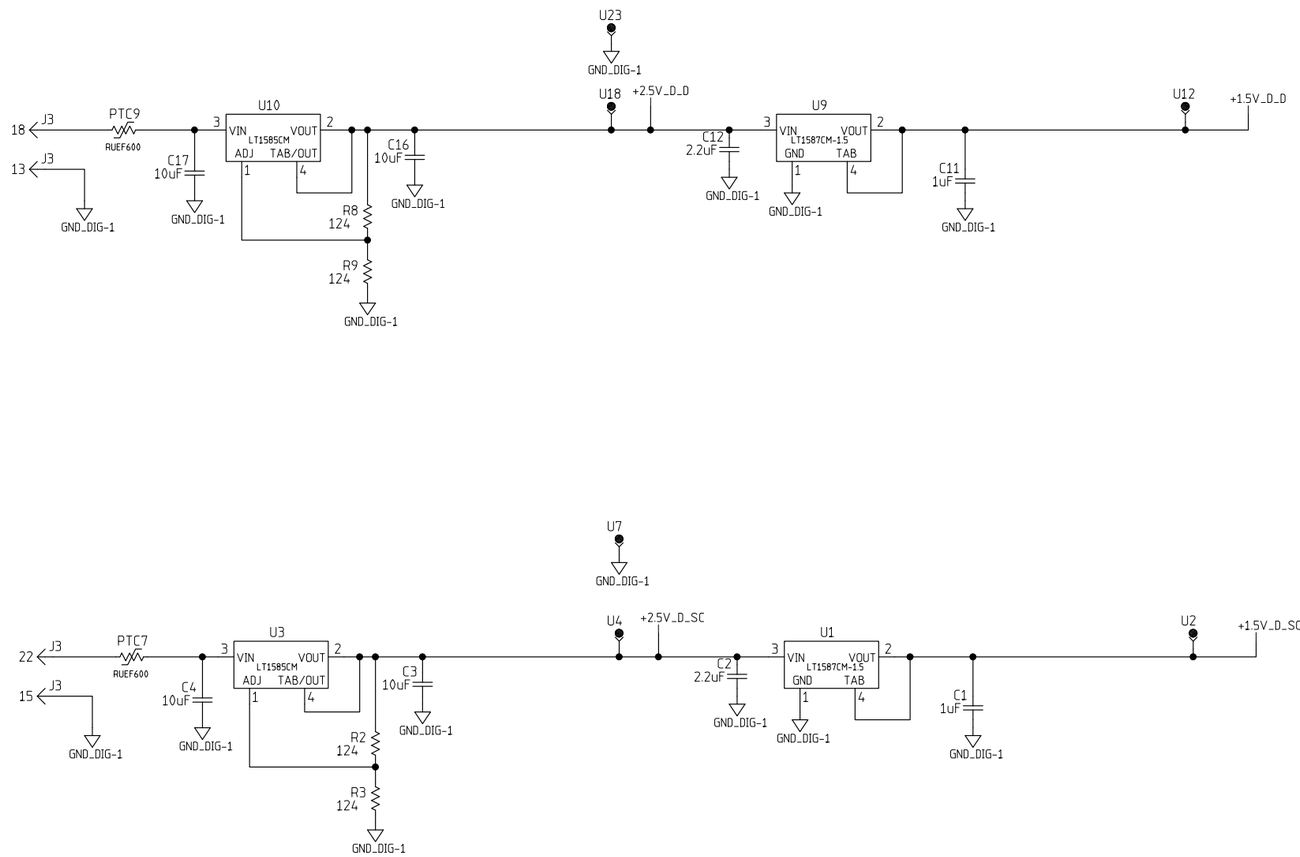

REVISION LETTER	CLASS REVIEW	REVISIONS	DATE	CHANGE BY	CHECK BY	APPROVED BY
—		ORIGINAL ISSUE	—	—	—	—

LOS ALAMOS

LOS ALAMOS NATIONAL LABORATORY
LOS ALAMOS, NEW MEXICO 87545

MENTOR 2005

	NAME	SIGNATURE	DATE	GROUP
ORIGINATED				
DESIGNED				
DRAWN	S. CHACON	S. CHACON	JUN 2008	AOT-IC
CHECKED	M. PROKOP	M. PROKOP	JUN 2008	AOT-RFE
PROJ. ENGR.	M. PROKOP	M. PROKOP	JUN 2008	AOT-RFE
APPROVED				
RELEASED				

CLASSIFICATION OF DRAWING: U

PART: U DRAWING: U

TITLE

(P-25)

HEAVY QUARK DETECTOR
DATA AQUISITION SYSTEM
FPGA / PWR SUPPLY

TOLERANCE (UNLESS OTHERWISE NOTED)

X= ± ——— 0.XX= ± ——— ANGULAR ± ———
0.X= ± ——— 0.XXX= ± ——— FINISH ± ———

SCALE	NO. SHEETS	DRAWING NO.	SIZE	SHEET NO.
N/A	1	126Y-267912	D	22

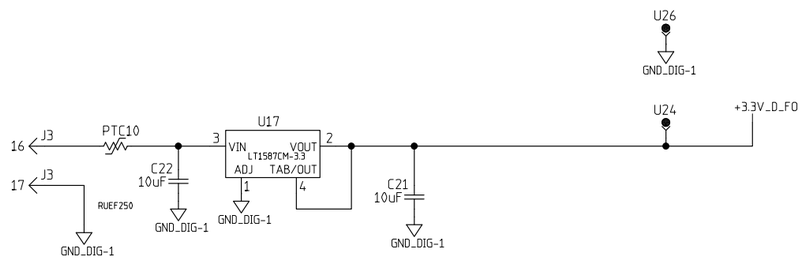

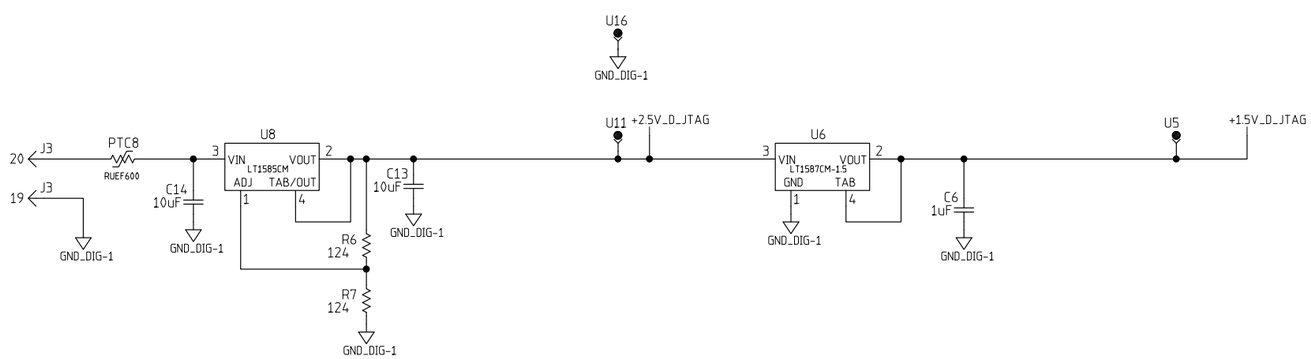

REVISION LETTER	CLASS REVIEW	REVISIONS	DATE	CHANGE BY	CHECK BY	APPROVED BY
—		ORIGINAL ISSUE	—	—	—	—

LOS ALAMOS

LOS ALAMOS NATIONAL LABORATORY
LOS ALAMOS, NEW MEXICO 87545

MENTOR 2005

	NAME	SIGNATURE	DATE	GROUP
ORIGINATED				
DESIGNED				
DRAWN	S. CHACON	S. CHACON	JUN 2008	AOT-IC
CHECKED	M. PROKOP	M. PROKOP	JUN 2008	AOT-RFE
PROJ. ENGR.	M. PROKOP	M. PROKOP	JUN 2008	AOT-RFE
APPROVED				
RELEASED				

CLASSIFICATION OF DRAWING: U

PART: U DRAWING: U

TITLE

(P-25)

HEAVY QUARK DETECTOR
DATA AQUISITION SYSTEM
FO/JTAG/PWR SUPPLY

TOLERANCE (UNLESS OTHERWISE NOTED)

X= ± ——— 0.XX= ± ——— ANGULAR ± ———
0.X= ± ——— 0.XXX= ± ——— FINISH ± ———

SCALE	NO. SHEETS	DRAWING NO.	SIZE	SHEET NO.
N/A	1	126Y-267912	D	23

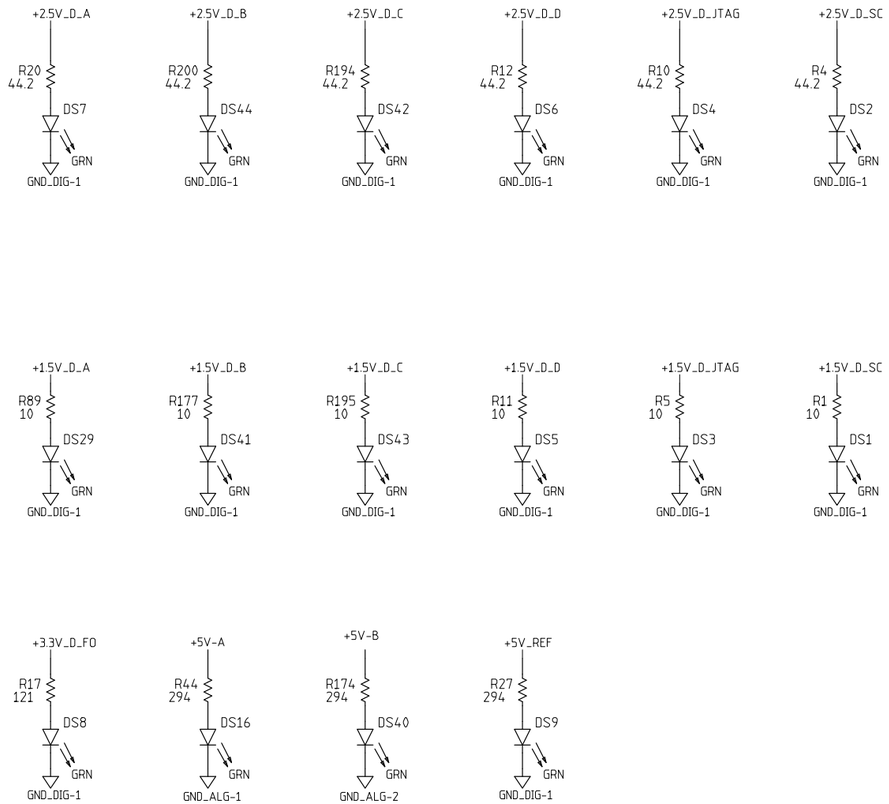

REVISION LETTER	CLASS REVIEW	REVISIONS	DATE	CHANGE BY	CHECK BY	APPROVED BY
—		ORIGINAL ISSUE	—	—	—	—

LOS ALAMOS

LOS ALAMOS NATIONAL LABORATORY
LOS ALAMOS, NEW MEXICO 87545

MENTOR 2005

	NAME	SIGNATURE	DATE	GROUP
ORIGINATED				
DESIGNED				
DRAWN	S. CHACON	S. CHACON	JUN 2008	AOT-IC
CHECKED	M. PROKOP	M. PROKOP	JUN 2008	AOT-RFE
PROJ. ENGR.	M. PROKOP	M. PROKOP	JUN 2008	AOT-RFE
APPROVED				
RELEASED				

CLASSIFICATION OF DRAWING: U

PART: U DRAWING: U

TITLE

(P-25)

HEAVY QUARK DETECTOR
DATA AQUISITION SYSTEM
SC_/PWR SUPPLY

TOLERANCE (UNLESS OTHERWISE NOTED)

X= ± ——— 0.XX= ± ——— ANGULAR ± ———
0.X= ± ——— 0.XXX= ± ——— FINISH ± ———

SCALE	NO. SHEETS	DRAWING NO.	SHEET SIZE	SHEET NO.
N/A	1	126Y-267912	D	24

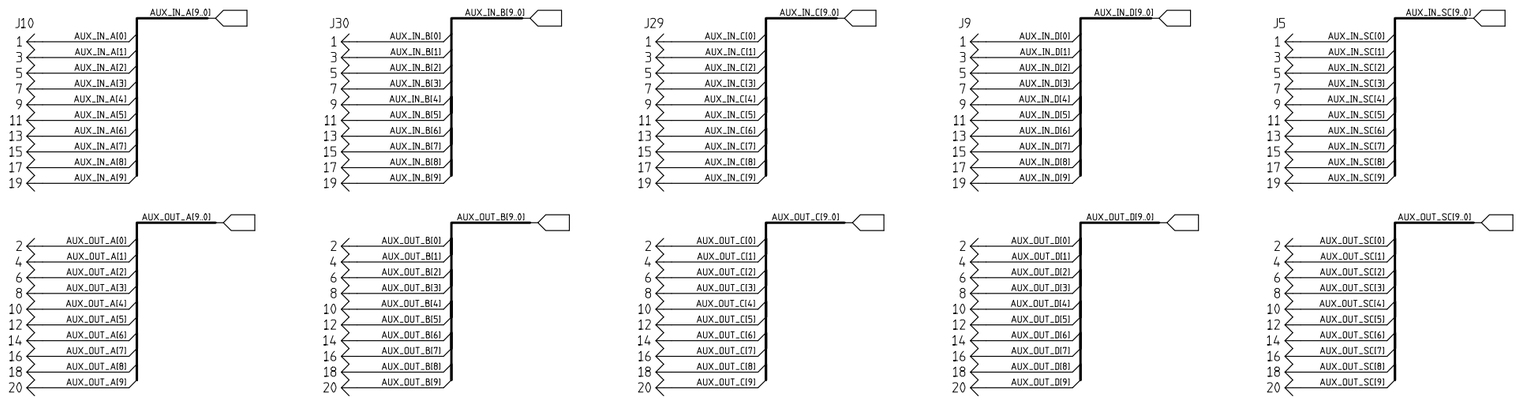

REVISION LETTER	CLASS REVIEW	REVISIONS	DATE	CHANGE BY	CHECK BY	APPROVED BY
—		ORIGINAL ISSUE	—	—	—	—

LOS ALAMOS

LOS ALAMOS NATIONAL LABORATORY
LOS ALAMOS, NEW MEXICO 87545

MENTOR 2005

	NAME	SIGNATURE	DATE	GROUP
ORIGINATED				
DESIGNED				
DRAWN	S. CHACON	S. CHACON	JUN 2008	AOT-IC
CHECKED	M. PROKOP	M. PROKOP	JUN 2008	AOT-RFE
PROJ. ENGR.	M. PROKOP	M. PROKOP	JUN 2008	AOT-RFE
APPROVED				
RELEASED				

CLASSIFICATION OF DRAWING: U
PART: U DRAWING: U

TITLE

(P-25)

HEAVY QUARK DETECTOR
DATA AQUISITION SYSTEM

TOLERANCE (UNLESS OTHERWISE NOTED)
X= ± ——— 0.XX= ± ——— ANGULAR ± ———
0.X= ± ——— 0.XXX= ± ——— FINISH ± ———

SCALE	NO. SHEETS	DRAWING NO.	SIZE	SHEET NO.
N/A	1	126Y-267912	D	25

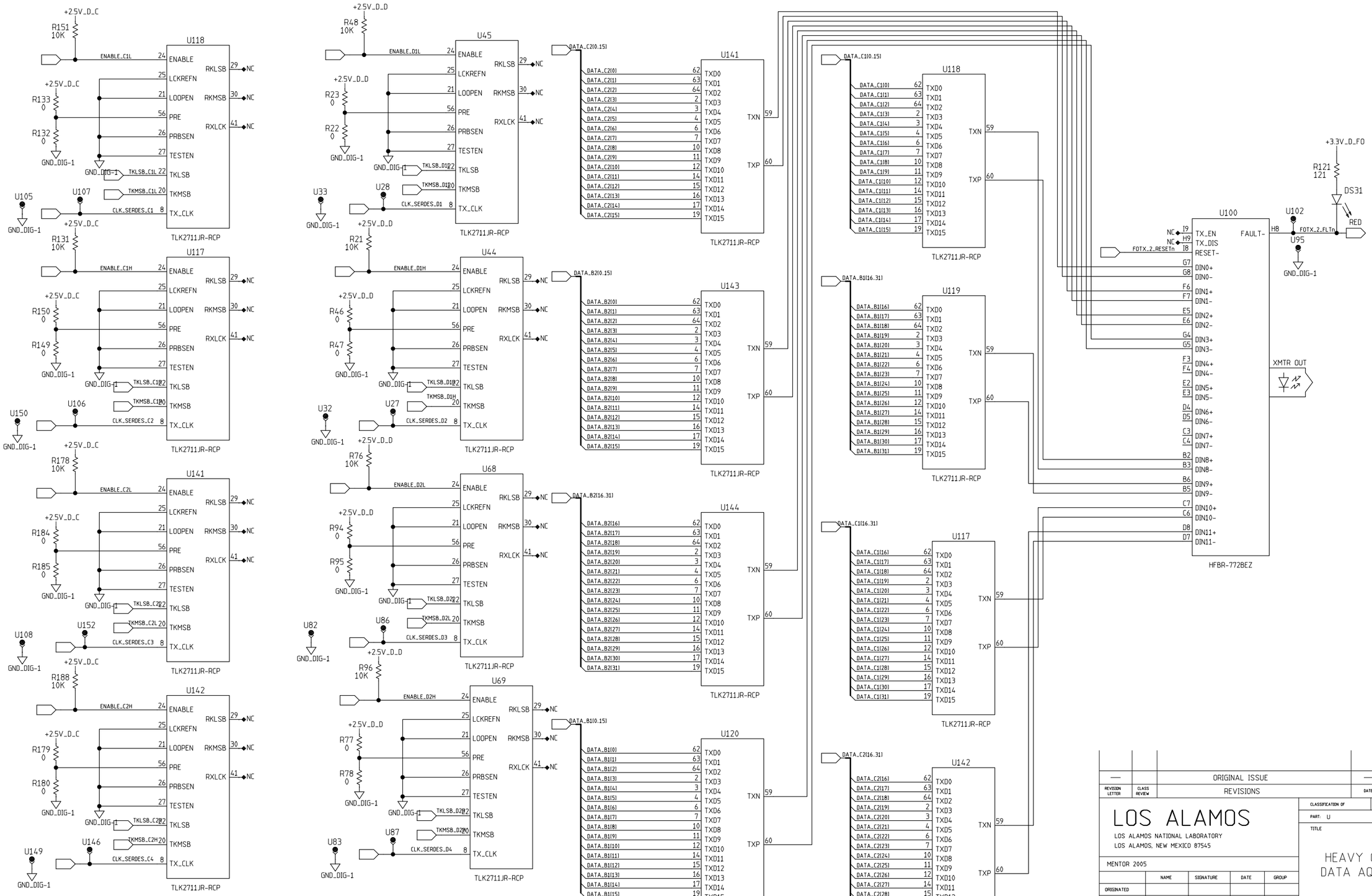

—		ORIGINAL ISSUE	—	—	—	—
REVISION LETTER	CLASS REVIEW	REVISIONS	DATE	CHANGE BY	CHECK BY	APPROVED BY

LOS ALAMOS

LOS ALAMOS NATIONAL LABORATORY
LOS ALAMOS, NEW MEXICO 87545

MENTOR 2005

	NAME	SIGNATURE	DATE	GROUP
ORIGINATED				
DESIGNED				
DRAWN	S. CHACON	S. CHACON	JUN 2008	AQT-IC
CHECKED	M. PROKOP	M. PROKOP	JUN 2008	AQT-RFE
PROJ. ENGR.	M. PROKOP	M. PROKOP	JUN 2008	AQT-RFE
APPROVED				
RELEASED				

CLASSIFICATION OF: DRAWING: U
PART: U DRAWING: U

TITLE

(P-25)

HEAVY QUARK DETECTOR
DATA AQUISITION SYSTEM

TOLERANCE (UNLESS OTHERWISE NOTED)
X= ± ——— 0.XX= ± ——— ANGULAR ± ———
0.X= ± ——— 0.XXX= ± ——— FINISH ± ———

SCALE	NO. SHEETS	DRAWING NO.	SIZE	SHEET NO.
N/A	1	126Y-267912	D	26

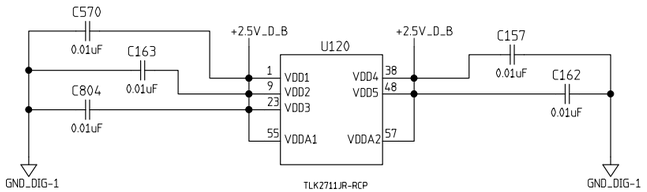

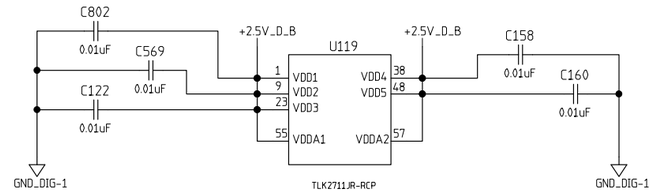

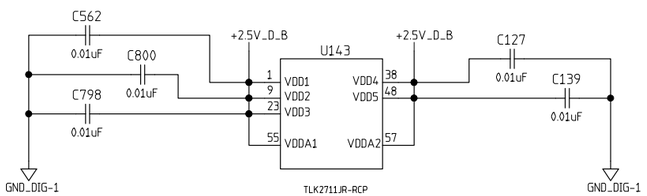

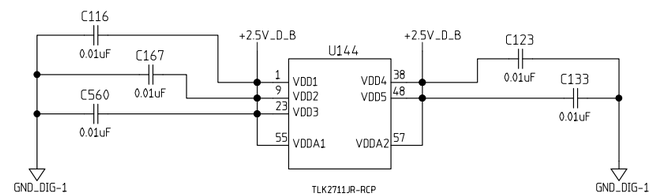

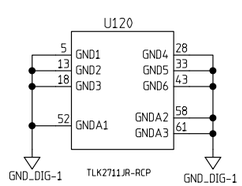

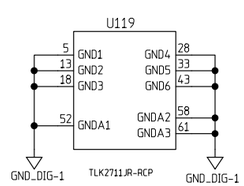

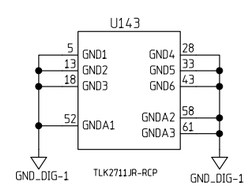

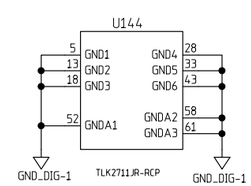

REVISION LETTER	CLASS REVIEW	REVISIONS	DATE	CHANGE BY	CHECK BY	APPROVED BY
—		ORIGINAL ISSUE	—	—	—	—

LOS ALAMOS

LOS ALAMOS NATIONAL LABORATORY
LOS ALAMOS, NEW MEXICO 87545

MENTOR 2005

	NAME	SIGNATURE	DATE	GROUP
ORIGINATED				
DESIGNED				
DRAWN	S. CHACON	S. CHACON	JUN 2008	AOT-IC
CHECKED	M. PROKOP	M. PROKOP	JUN 2008	AOT-RFE
PROJ. ENGR.	M. PROKOP	M. PROKOP	JUN 2008	AOT-RFE
APPROVED				
RELEASED				

CLASSIFICATION OF DRAWING: U
PART: U DRAWING: U

TITLE
(P-25)
HEAVY QUARK DETECTOR
DATA AQUISITION SYSTEM

TOLERANCE (UNLESS OTHERWISE NOTED)
X= ± ——— 0.XX= ± ——— ANGULAR ± ———
0.X= ± ——— 0.XXX= ± ——— FINISH ± ———

SCALE	NO. SHEETS	DRAWING NO.	SIZE	SHEET NO.
N/A	1	126Y-267912	D	27

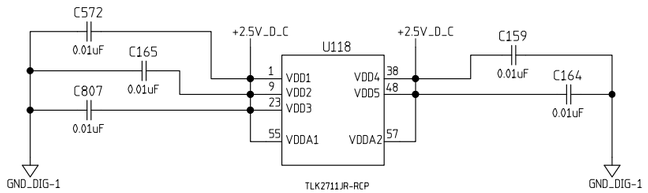

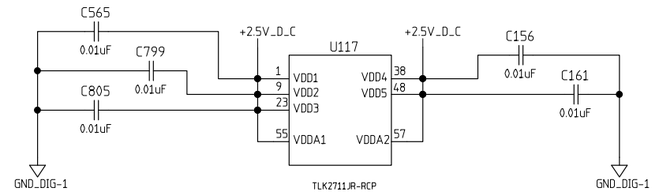

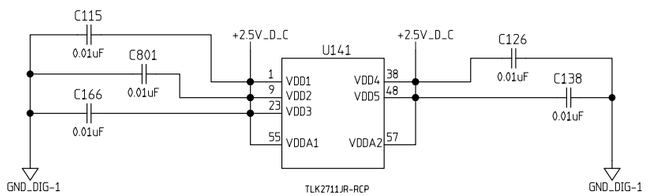

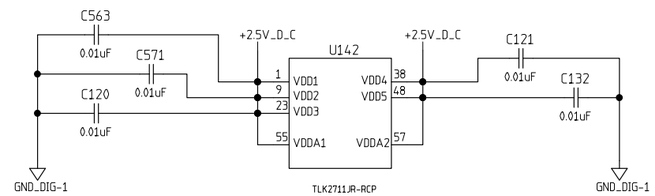

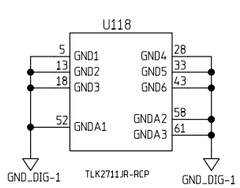

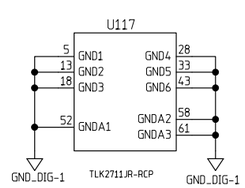

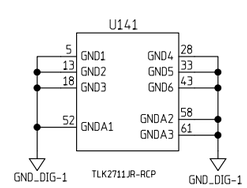

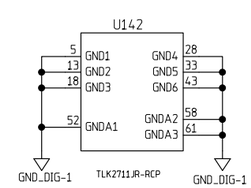

REVISION LETTER	CLASS REVIEW	REVISIONS	DATE	CHANGE BY	CHECK BY	APPROVED BY
—		ORIGINAL ISSUE	—	—	—	—

LOS ALAMOS

LOS ALAMOS NATIONAL LABORATORY
LOS ALAMOS, NEW MEXICO 87545

MENTOR 2005

	NAME	SIGNATURE	DATE	GROUP
ORIGINATED				
DESIGNED				
DRAWN	S. CHACON	S. CHACON	JUN 2008	AOT-IC
CHECKED	M. PROKOP	M. PROKOP	JUN 2008	AOT-RFE
PROJ. ENGR.	M. PROKOP	M. PROKOP	JUN 2008	AOT-RFE
APPROVED				
RELEASED				

CLASSIFICATION OF: DRAWING: U
PART: U DRAWING: U

TITLE
(P-25)
HEAVY QUARK DETECTOR
DATA AQUISITION SYSTEM

TOLERANCE (UNLESS OTHERWISE NOTED)
X= ± ——— 0.XX= ± ——— ANGULAR ± ———
0.X= ± ——— 0.XXX= ± ——— FINISH ± ———

SCALE	NO. SHEETS	DRAWING NO.	SIZE	SHEET NO.
N/A	1	126Y-267912	D	28

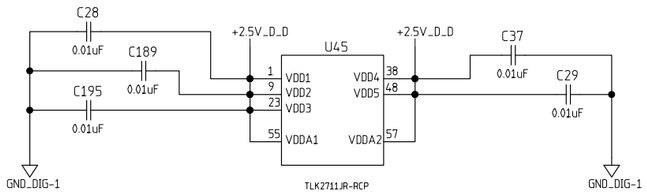

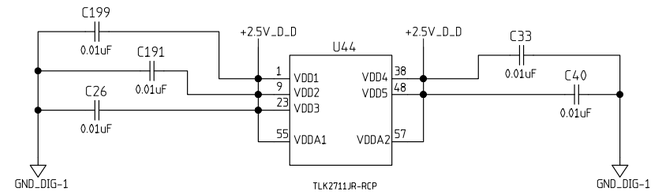

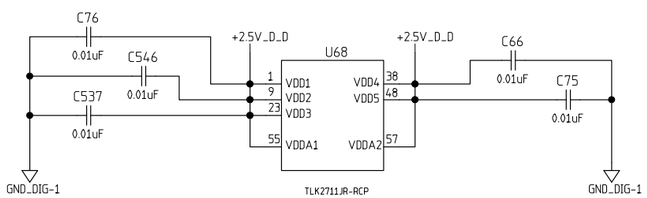

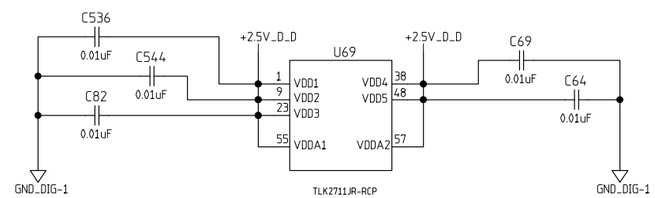

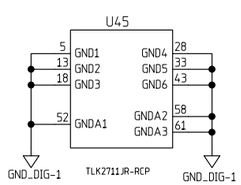

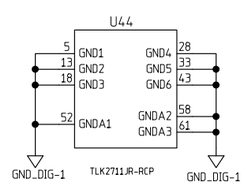

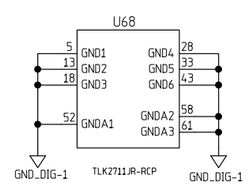

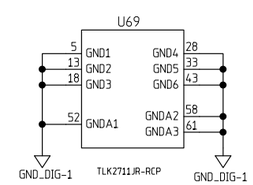

REVISION LETTER	CLASS REVIEW	REVISIONS	DATE	CHANGE BY	CHECK BY	APPROVED BY
—		ORIGINAL ISSUE	—	—	—	—

LOS ALAMOS

LOS ALAMOS NATIONAL LABORATORY
LOS ALAMOS, NEW MEXICO 87545

MENTOR 2005

	NAME	SIGNATURE	DATE	GROUP
ORIGINATED				
DESIGNED				
DRAWN	S. CHACON	S. CHACON	JUN 2008	AOT-IC
CHECKED	M. PROKOP	M. PROKOP	JUN 2008	AOT-RFE
PROJ. ENGR.	M. PROKOP	M. PROKOP	JUN 2008	AOT-RFE
APPROVED				
RELEASED				

CLASSIFICATION OF DRAWING: U

PART: U DRAWING: U

TITLE

(P-25)

HEAVY QUARK DETECTOR
DATA AQUISITION SYSTEM

TOLERANCE (UNLESS OTHERWISE NOTED)

X= ± ——— 0.XX= ± ——— ANGULAR ± ———
0.X= ± ——— 0.XXX= ± ——— FINISH ± ———

SCALE	NO. SHEETS	DRAWING NO.	SIZE	SHEET NO.
N/A	1	126Y-267912	D	29

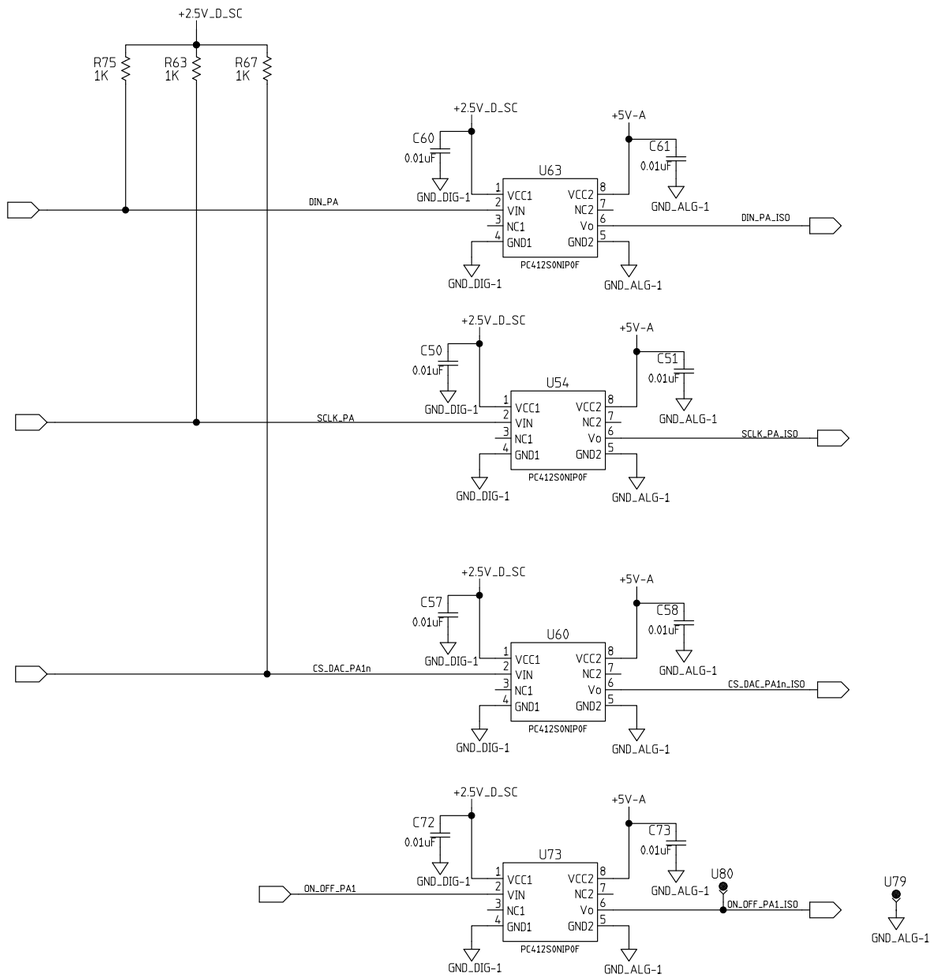

—		ORIGINAL ISSUE	—	—	—	—
REVISION LETTER	CLASS REVIEW	REVISIONS	DATE	CHANGE BY	CHECK BY	APPROVED BY

LOS ALAMOS

LOS ALAMOS NATIONAL LABORATORY
LOS ALAMOS, NEW MEXICO 87545

MENTOR 2005

	NAME	SIGNATURE	DATE	GROUP
ORIGINATED				
DESIGNED				
DRAWN	S. CHACON	S. CHACON	JUN 2008	AOT-IC
CHECKED	M. PROKOP	M. PROKOP	JUN 2008	AOT-RFE
PROJ. ENGR.	M. PROKOP	M. PROKOP	JUN 2008	AOT-RFE
APPROVED				
RELEASED				

CLASSIFICATION OF DRAWING: U

PART: U DRAWING: U

TITLE

(P-25)

HEAVY QUARK DETECTOR
DATA AQUISITION SYSTEM

TOLERANCE (UNLESS OTHERWISE NOTED)

X= ± —— 0.XX= ± —— ANGULAR ± ——
0.X= ± —— 0.XXX= ± —— FINISH ± ——

SCALE	NO. SHEETS	DRAWING NO.	SIZE	SHEET NO.
N/A	1	126Y-267912	D	30

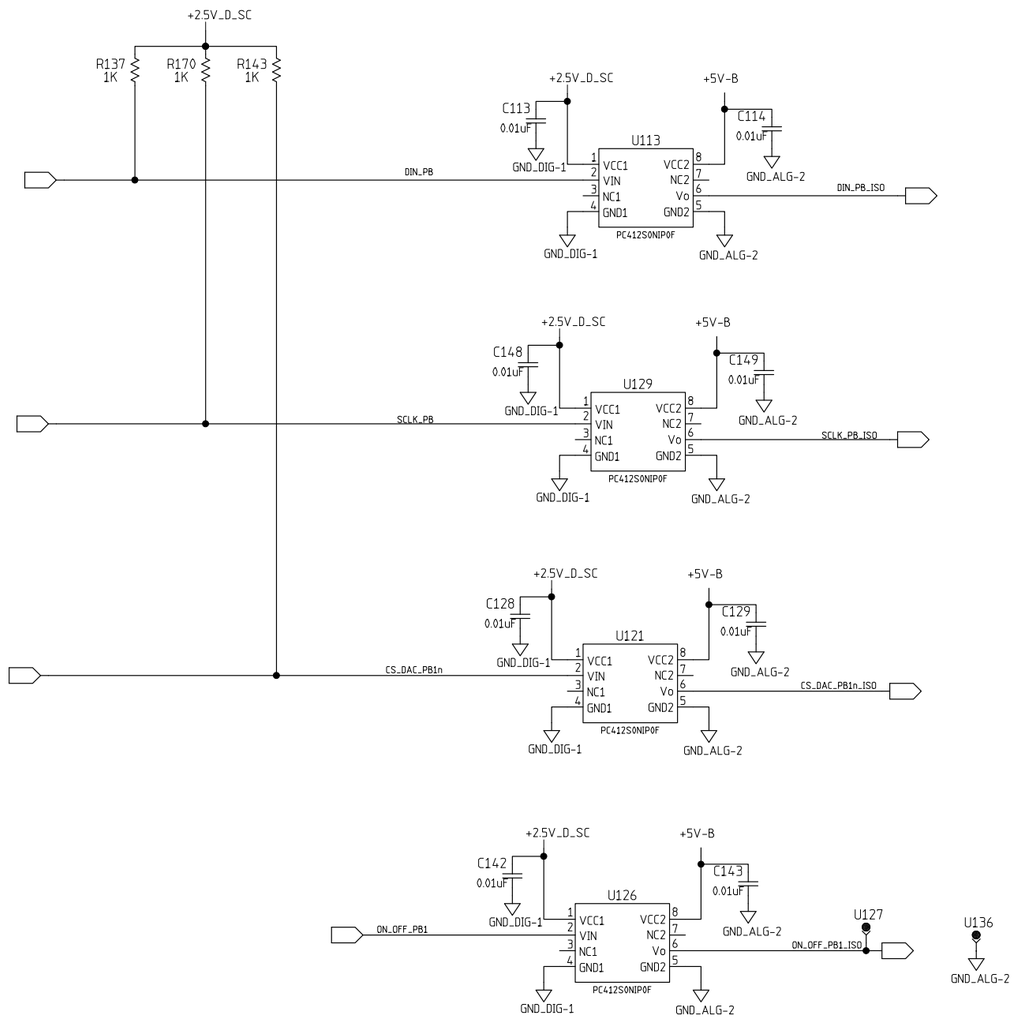

REVISION LETTER	CLASS REVIEW	REVISIONS	DATE	CHANGE BY	CHECK BY	APPROVED BY
—		ORIGINAL ISSUE	—	—	—	—

LOS ALAMOS

LOS ALAMOS NATIONAL LABORATORY
LOS ALAMOS, NEW MEXICO 87545

MENTOR 2005

	NAME	SIGNATURE	DATE	GROUP
ORIGINATED				
DESIGNED				
DRAWN	S. CHACON	S. CHACON	JUN 2008	AOT-IC
CHECKED	M. PROKOP	M. PROKOP	JUN 2008	AOT-RFE
PROJ. ENGR.	M. PROKOP	M. PROKOP	JUN 2008	AOT-RFE
APPROVED				
RELEASED				

CLASSIFICATION OF: DRAWING: U
PART: U DRAWING: U

TITLE

(P-25)

HEAVY QUARK DETECTOR
DATA AQUISITION SYSTEM

TOLERANCE (UNLESS OTHERWISE NOTED)
X= ± ——— 0.XX= ± ——— ANGULAR ± ———
0.X= ± ——— 0.XXX= ± ——— FINISH ± ———

SCALE	NO. SHEETS	DRAWING NO.	SIZE	SHEET NO.
N/A	1	126Y-267912	D	31

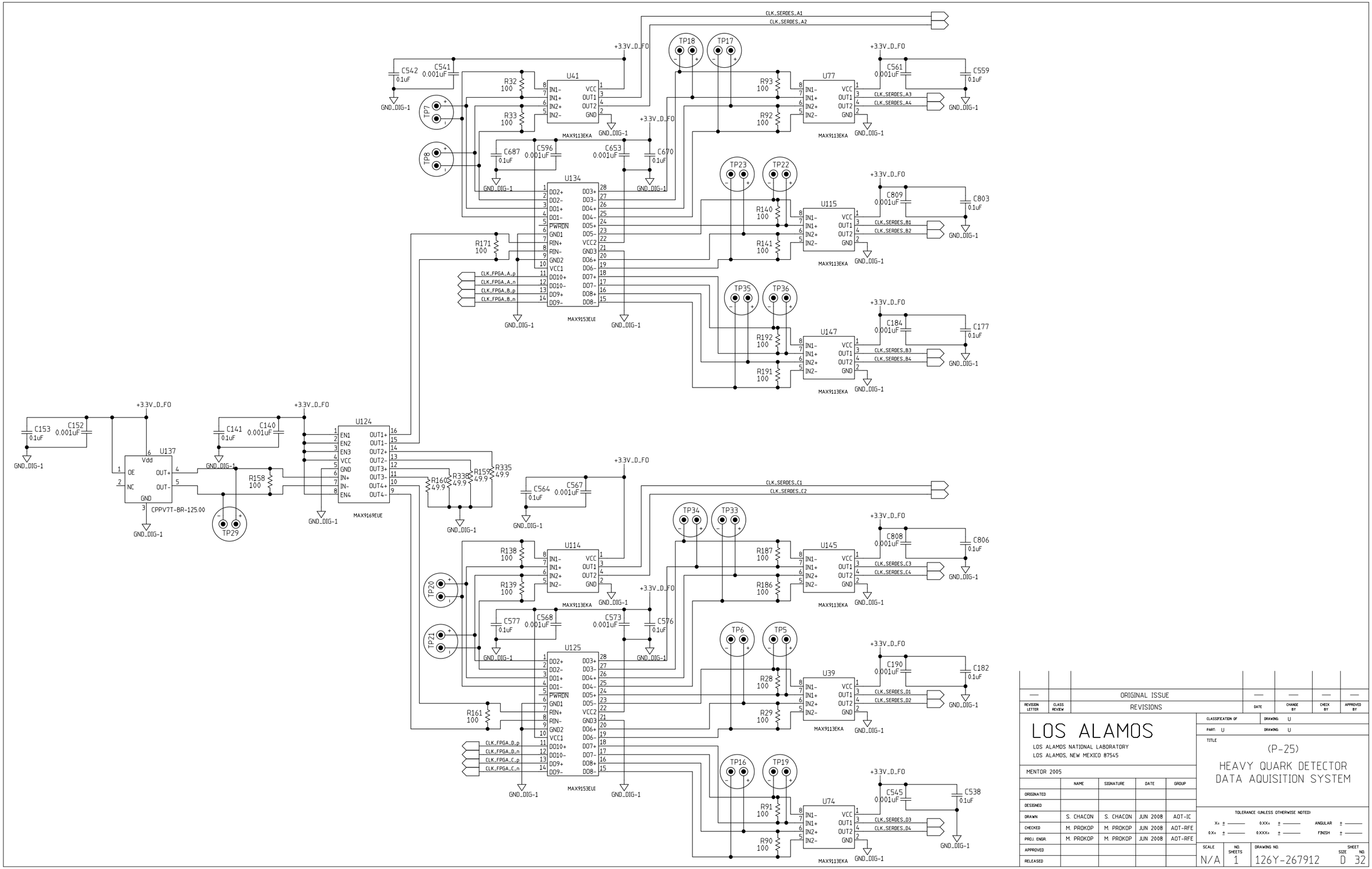

—		ORIGINAL ISSUE	—	—	—	—
REVISION LETTER	CLASS REVIEW	REVISIONS	DATE	CHANGE BY	CHECK BY	APPROVED BY

LOS ALAMOS

LOS ALAMOS NATIONAL LABORATORY
LOS ALAMOS, NEW MEXICO 87545

MENTOR 2005

	NAME	SIGNATURE	DATE	GROUP
ORIGINATED				
DESIGNED				
DRAWN	S. CHACON	S. CHACON	JUN 2008	AOT-IC
CHECKED	M. PROKOP	M. PROKOP	JUN 2008	AOT-RFE
PROJ. ENGR.	M. PROKOP	M. PROKOP	JUN 2008	AOT-RFE
APPROVED				
RELEASED				

CLASSIFICATION OF: DRAWING: U
PART: U DRAWING: U

TITLE

(P-25)

HEAVY QUARK DETECTOR
DATA AQUISITION SYSTEM

TOLERANCE (UNLESS OTHERWISE NOTED)
X= ± ——— 0.XX= ± ——— ANGULAR ± ———
0.X= ± ——— 0.XXX= ± ——— FINISH ± ———

SCALE	NO. SHEETS	DRAWING NO.	SIZE	SHEET NO.
N/A	1	126Y-267912	D	32

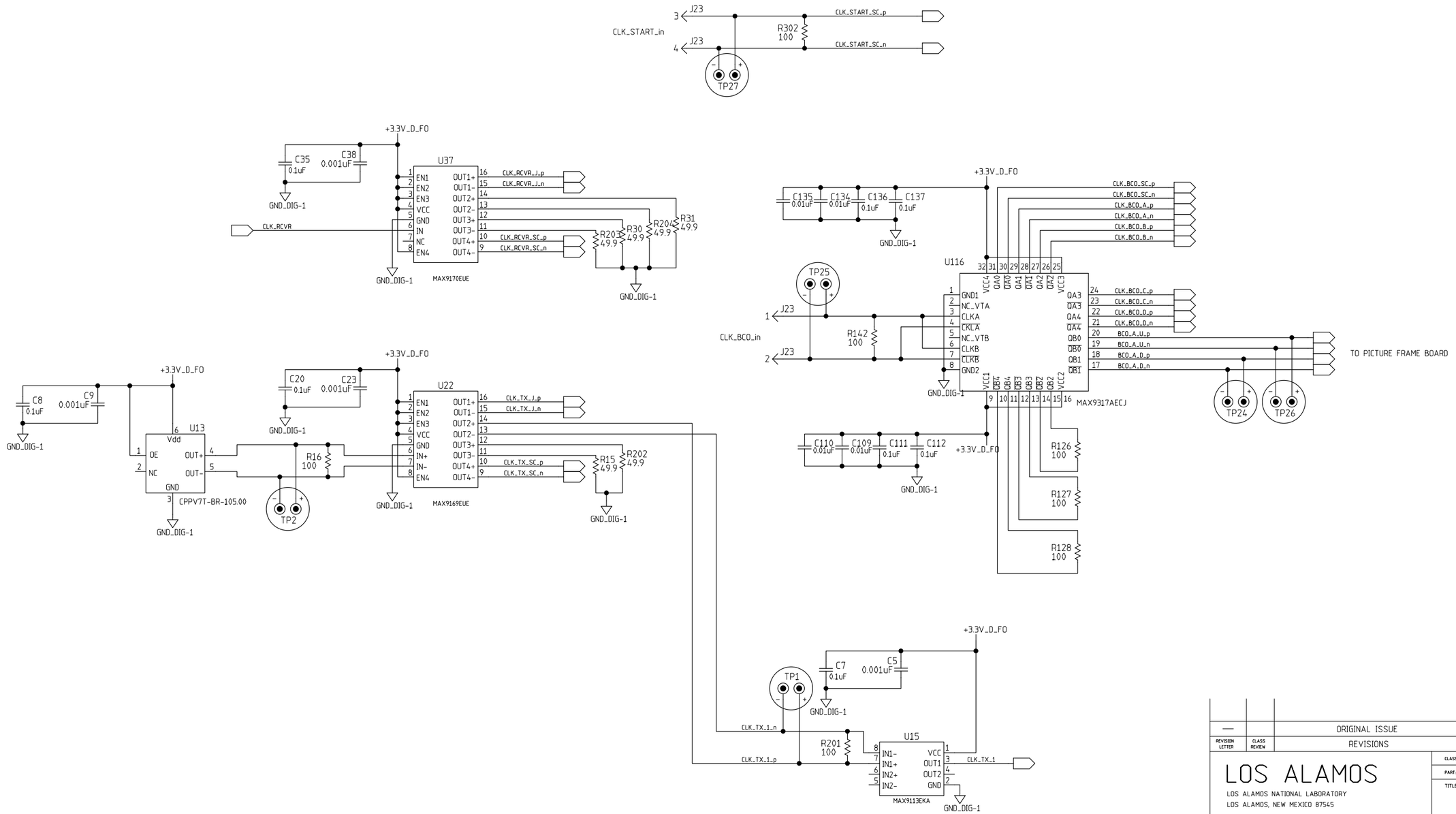

REVISION LETTER	CLASS REVIEW	REVISIONS	DATE	CHANGE BY	CHECK BY	APPROVED BY
—		ORIGINAL ISSUE	—	—	—	—

LOS ALAMOS

LOS ALAMOS NATIONAL LABORATORY
LOS ALAMOS, NEW MEXICO 87545

MENTOR 2005

	NAME	SIGNATURE	DATE	GROUP
ORIGINATED				
DESIGNED				
DRAWN	S. CHACON	S. CHACON	JUN 2008	AOT-IC
CHECKED	M. PROKOP	M. PROKOP	JUN 2008	AOT-RFE
PROJ. ENGR.	M. PROKOP	M. PROKOP	JUN 2008	AOT-RFE
APPROVED				
RELEASED				

CLASSIFICATION OF DRAWING: U
PART: U DRAWING: U

TITLE
(P-25)
HEAVY QUARK DETECTOR
DATA AQUISITION SYSTEM

TOLERANCE (UNLESS OTHERWISE NOTED)
X= ± ——— 0.XX= ± ——— ANGULAR ± ———
0.X= ± ——— 0.XXX= ± ——— FINISH ± ———

SCALE	NO. SHEETS	DRAWING NO.	SIZE	SHEET NO.
N/A	1	126Y-267912	D	33

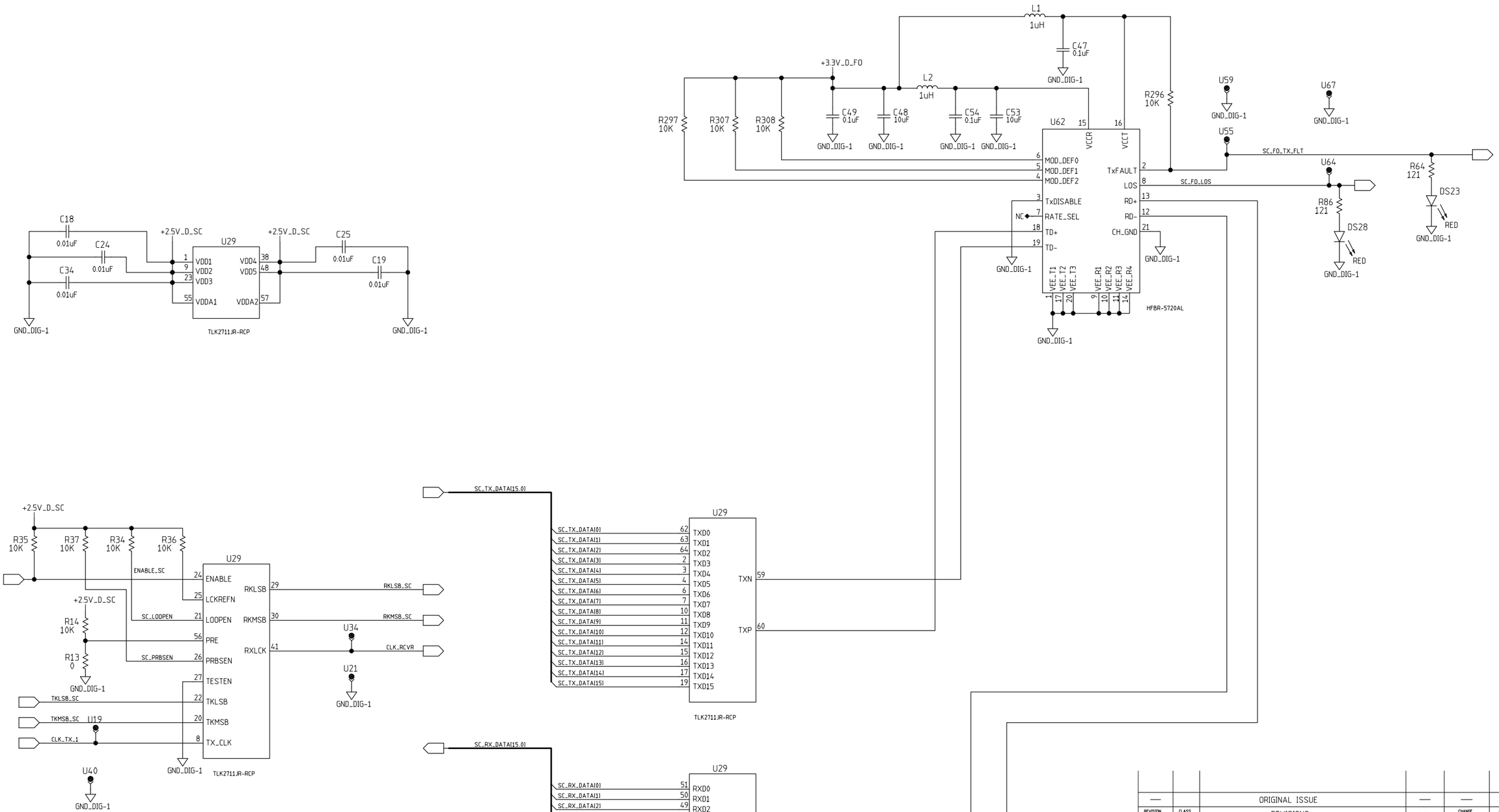

REVISION LETTER	CLASS REVIEW	REVISIONS	DATE	CHANGE BY	CHECK BY	APPROVED BY
—		ORIGINAL ISSUE	—	—	—	—

LOS ALAMOS

LOS ALAMOS NATIONAL LABORATORY
LOS ALAMOS, NEW MEXICO 87545

MENTOR 2005

	NAME	SIGNATURE	DATE	GROUP
ORIGINATED				
DESIGNED				
DRAWN	S. CHACON	S. CHACON	JUN 2008	AOT-IC
CHECKED	M. PROKOP	M. PROKOP	JUN 2008	AOT-RFE
PROJ. ENGR.	M. PROKOP	M. PROKOP	JUN 2008	AOT-RFE
APPROVED				
RELEASED				

CLASSIFICATION OF DRAWING: U

PART: U DRAWING: U

TITLE

(P-25)

HEAVY QUARK DETECTOR
DATA AQUISITION SYSTEM

TOLERANCE (UNLESS OTHERWISE NOTED)

X= ± ——— 0.XX= ± ——— ANGULAR ± ———
0.X= ± ——— 0.XXX= ± ——— FINISH ± ———

SCALE	NO. SHEETS	DRAWING NO.	SIZE	SHEET NO.
N/A	1	126Y-267912	D	34

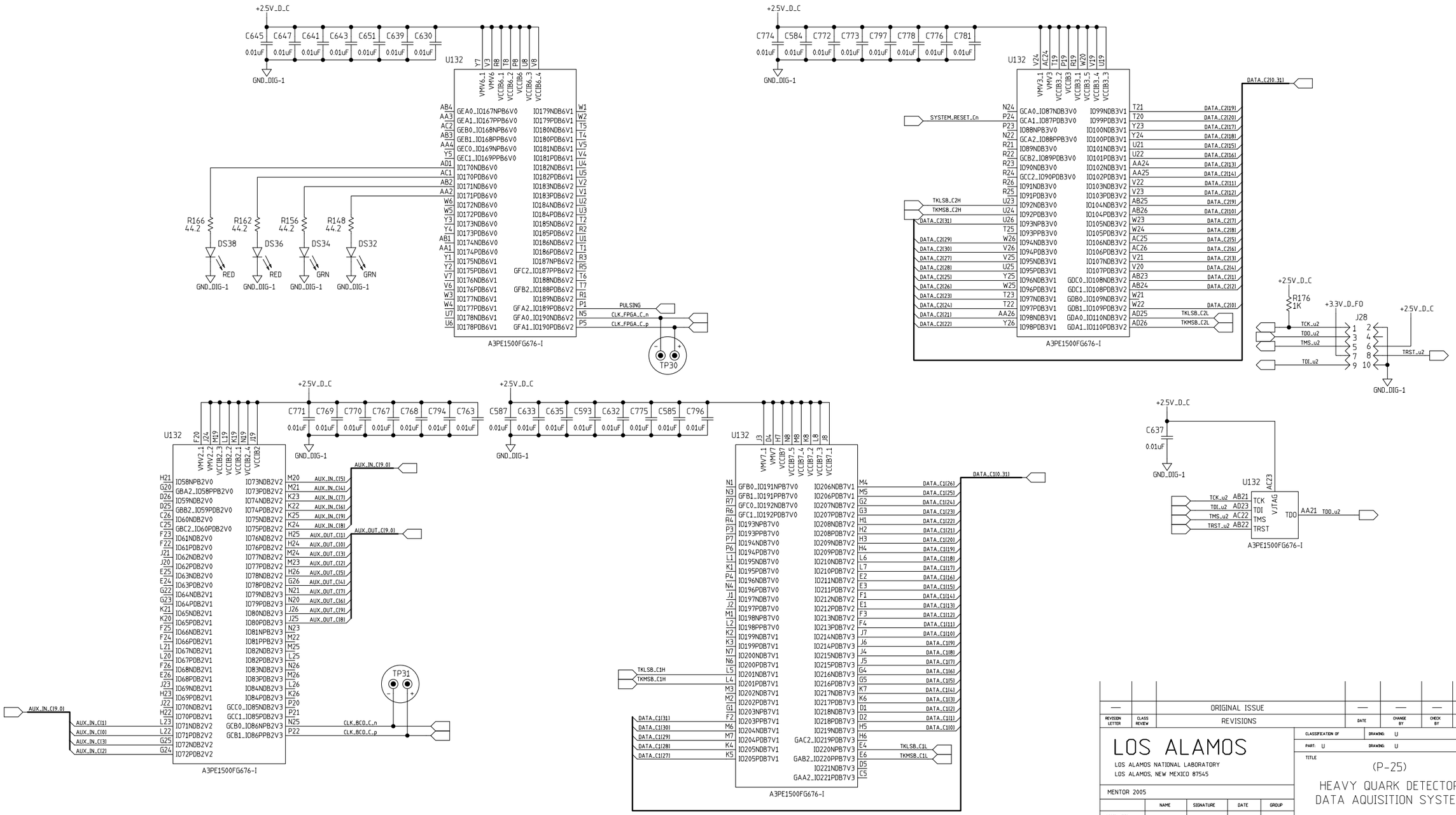

REVISION LETTER	CLASS REVIEW	REVISIONS	DATE	CHANGE BY	CHECK BY	APPROVED BY
—		ORIGINAL ISSUE	—	—	—	—

LOS ALAMOS

LOS ALAMOS NATIONAL LABORATORY
LOS ALAMOS, NEW MEXICO 87545

MENTOR 2005

	NAME	SIGNATURE	DATE	GROUP
ORIGINATED				
DESIGNED				
DRAWN	S. CHACON	S. CHACON	JUN 2008	AOT-IC
CHECKED	M. PROKOP	M. PROKOP	JUN 2008	AOT-RFE
PROJ. ENGR.	M. PROKOP	M. PROKOP	JUN 2008	AOT-RFE
APPROVED				
RELEASED				

CLASSIFICATION OF: DRAWING: U
PART: U DRAWING: U

TITLE

(P-25)

HEAVY QUARK DETECTOR
DATA AQUISITION SYSTEM

TOLERANCE (UNLESS OTHERWISE NOTED)
X.= ± — 0.XX= ± — ANGULAR ± —
0.X= ± — 0.XXX= ± — FINISH ± —

SCALE	NO. SHEETS	DRAWING NO.	SIZE	SHEET NO.
N/A	1	126Y-267912	D	35

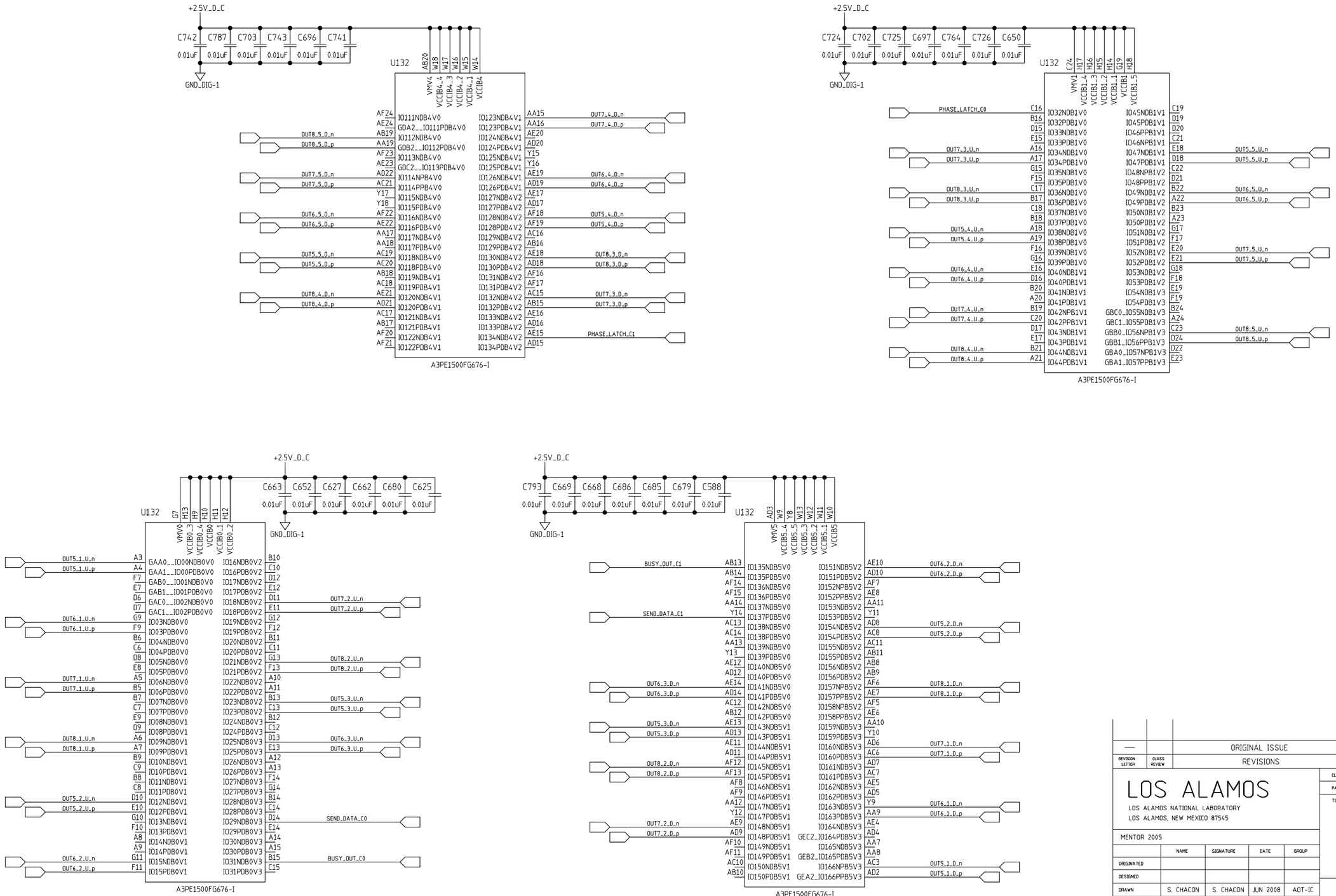

REVISION LETTER	CLASS REVIEW	REVISIONS	DATE	CHANGE BY	CHECK BY	APPROVED BY
—		ORIGINAL ISSUE	—	—	—	—

LOS ALAMOS

LOS ALAMOS NATIONAL LABORATORY
LOS ALAMOS, NEW MEXICO 87545

MENTOR 2005

	NAME	SIGNATURE	DATE	GROUP
ORIGINATED				
DESIGNED				
DRAWN	S. CHACON	S. CHACON	JUN 2008	AOT-IC
CHECKED	M. PROKOP	M. PROKOP	JUN 2008	AOT-RFE
PROJ. ENGR.	M. PROKOP	M. PROKOP	JUN 2008	AOT-RFE
APPROVED				
RELEASED				

CLASSIFICATION OF: DRAWING: U

PART: U DRAWING: U

TITLE

(P-25)

HEAVY QUARK DETECTOR
DATA AQUISITION SYSTEM

TOLERANCE (UNLESS OTHERWISE NOTED)

X= ± ——— 0.XX= ± ——— ANGULAR ± ———
0.X= ± ——— 0.XXX= ± ——— FINISH ± ———

SCALE	NO. SHEETS	DRAWING NO.	SIZE	SHEET NO.
N/A	1	126Y-267912	D	36

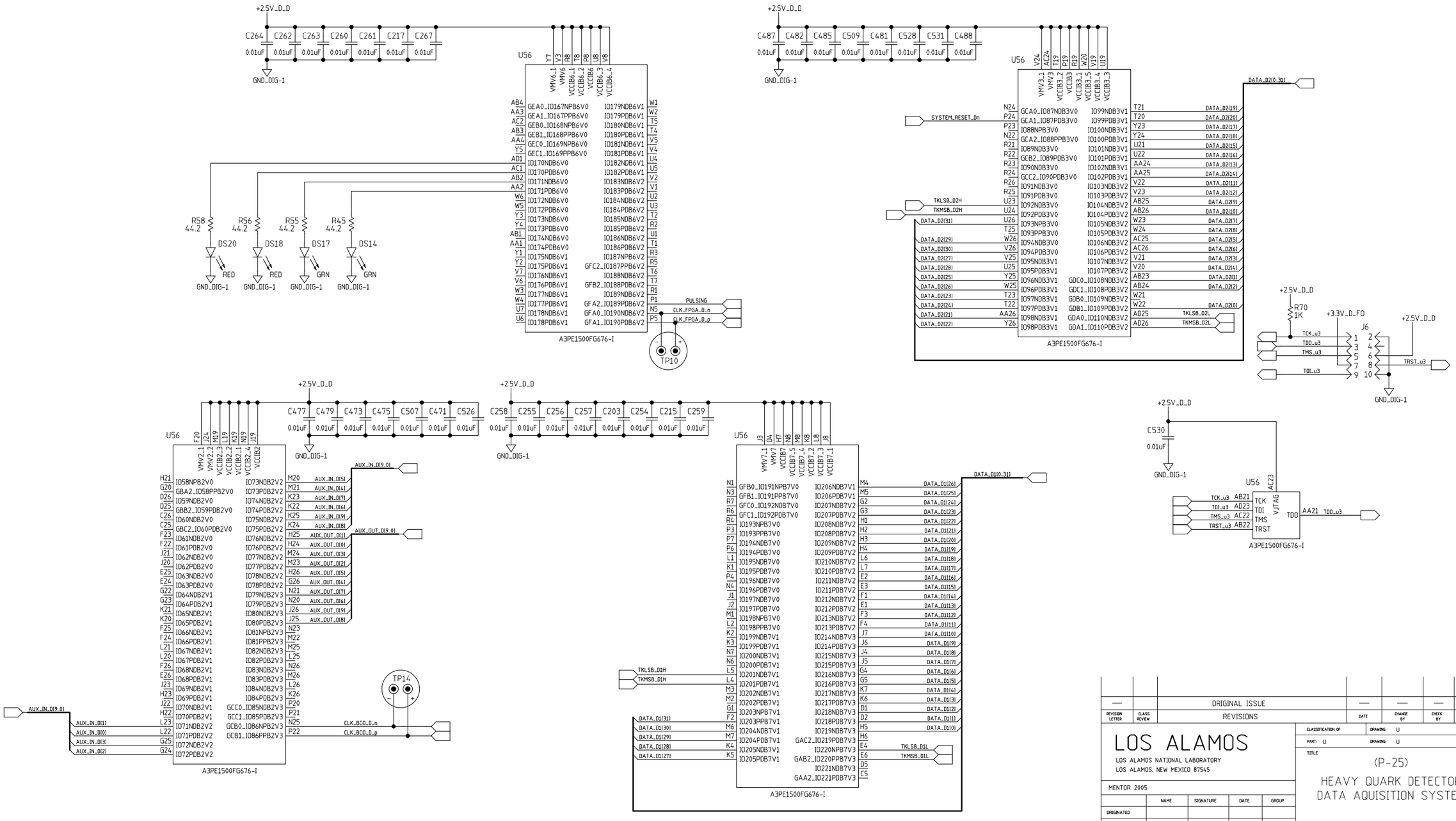

REVISION LETTER	CLASS REVISION	REVISIONS	DATE	CHANGE BY	CHECK BY	APPROVED BY
—		ORIGINAL ISSUE	—	—	—	—

LOS ALAMOS

LOS ALAMOS NATIONAL LABORATORY
LOS ALAMOS, NEW MEXICO 87545

MENTOR 2005

	NAME	SIGNATURE	DATE	GROUP
ORIGINATED				
DESIGNED				
DRAWN	S. CHACON	S. CHACON	JUN 2008	AOT-IC
CHECKED	M. PROKOP	M. PROKOP	JUN 2008	AOT-RFE
PROJ. ENGR.	M. PROKOP	M. PROKOP	JUN 2008	AOT-RFE
APPROVED				
RELEASED				

CLASSIFICATION OF: DRAWING: U
PART: U DRAWING: U

TITLE

(P-25)

HEAVY QUARK DETECTOR
DATA AQUISITION SYSTEM

TOLERANCE (UNLESS OTHERWISE NOTED)
X= ± —— 0.XX= ± —— ANGULAR ± ——
0.X= ± —— 0.XXX= ± —— FINISH ± ——

SCALE	NO. SHEETS	DRAWING NO.	SHEET SIZE	SHEET NO.
N/A	1	126Y-267912	D	37

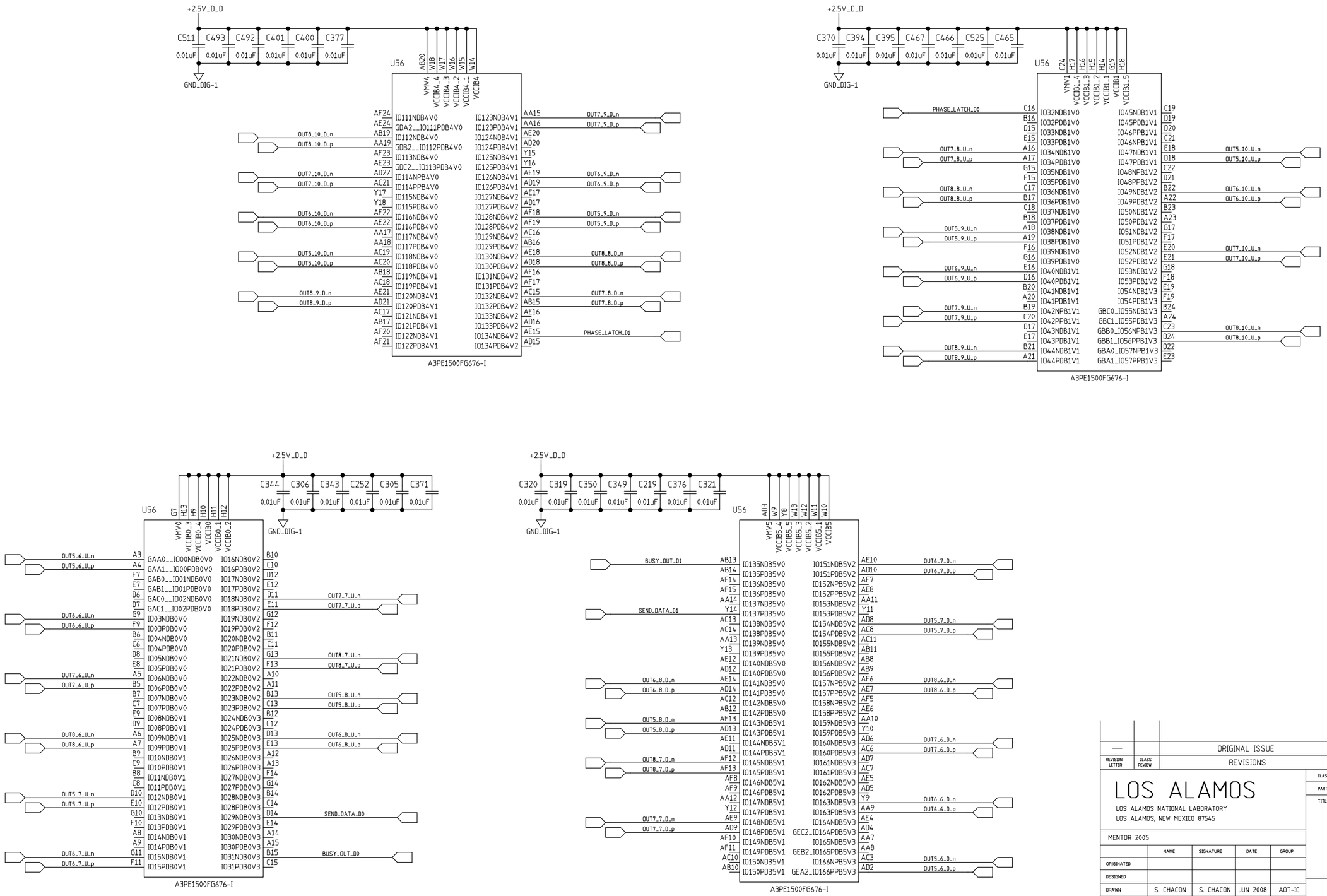

REVISION LETTER	CLASS REVIEW	REVISIONS	DATE	CHANGE BY	CHECK BY	APPROVED BY
—		ORIGINAL ISSUE	—	—	—	—

LOS ALAMOS

LOS ALAMOS NATIONAL LABORATORY
LOS ALAMOS, NEW MEXICO 87545

MENTOR 2005

	NAME	SIGNATURE	DATE	GROUP
ORIGINATED				
DESIGNED				
DRAWN	S. CHACON	S. CHACON	JUN 2008	AOT-IC
CHECKED	M. PROKOP	M. PROKOP	JUN 2008	AOT-RFE
PROJ. ENGR.	M. PROKOP	M. PROKOP	JUN 2008	AOT-RFE
APPROVED				
RELEASED				

CLASSIFICATION OF DRAWING: U
PART: U DRAWING: U

TITLE

(P-25)

HEAVY QUARK DETECTOR
DATA AQUISITION SYSTEM

TOLERANCE (UNLESS OTHERWISE NOTED)
X= ± ——— 0.XX= ± ——— ANGULAR ± ———
0.X= ± ——— 0.XXX= ± ——— FINISH ± ———

SCALE	NO. SHEETS	DRAWING NO.	SIZE	SHEET NO.
N/A	1	126Y-267912	D	38

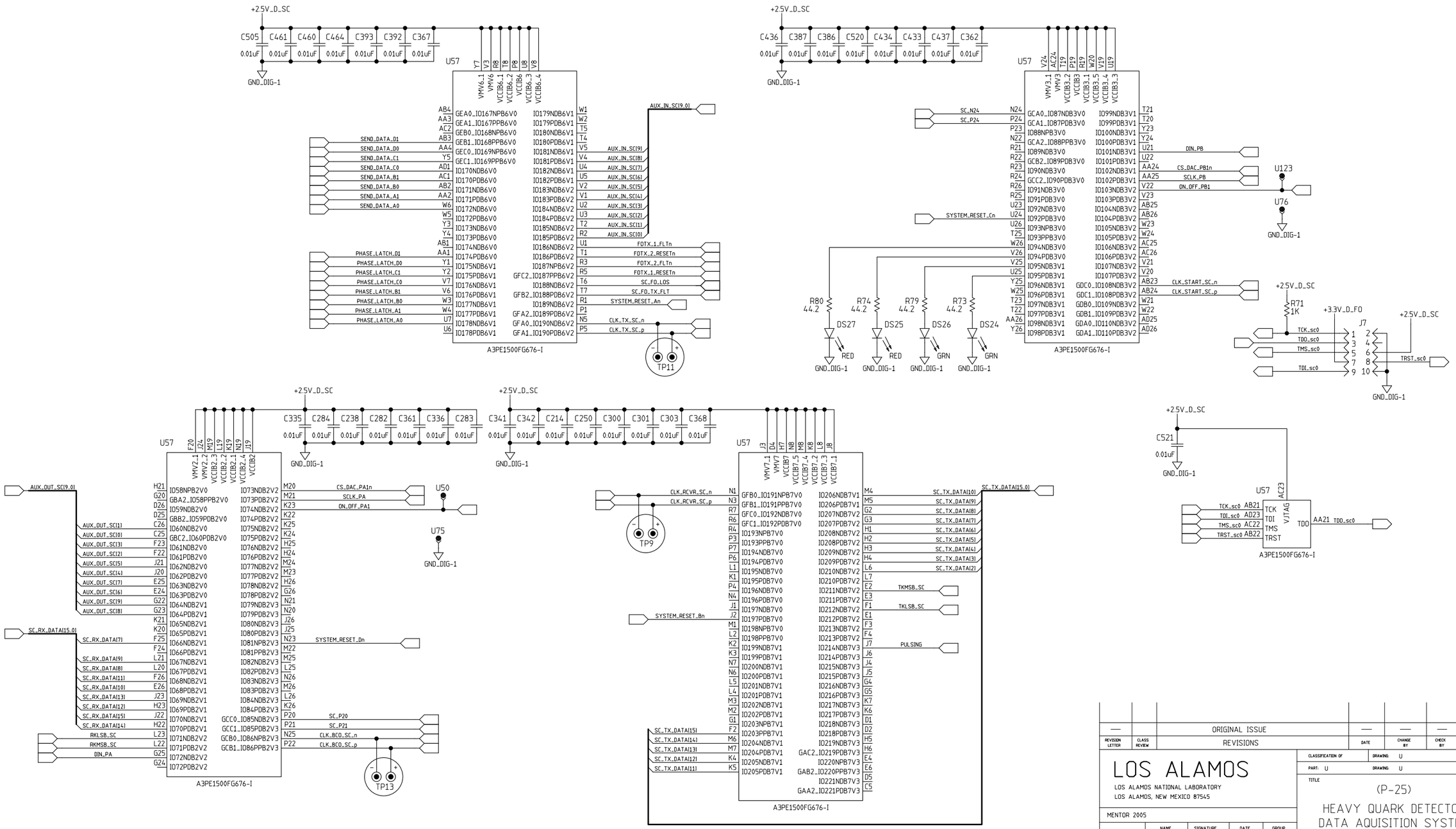

REVISION LETTER	CLASS REVISION	REVISIONS	DATE	CHANGE BY	CHECK BY	APPROVED BY
—		ORIGINAL ISSUE	—	—	—	—

LOS ALAMOS

LOS ALAMOS NATIONAL LABORATORY
LOS ALAMOS, NEW MEXICO 87545

MENTOR 2005

	NAME	SIGNATURE	DATE	GROUP
ORIGINATED				
DESIGNED				
DRAWN	S. CHACON	S. CHACON	JUN 2008	AOT-IC
CHECKED	M. PROKOP	M. PROKOP	JUN 2008	AOT-RFE
PROJ. ENGR.	M. PROKOP	M. PROKOP	JUN 2008	AOT-RFE
APPROVED				
RELEASED				

CLASSIFICATION OF: U
DRAWING: U
PART: U
DRAWING: U

TITLE

(P-25)

HEAVY QUARK DETECTOR
DATA AQUISITION SYSTEM

TOLERANCE (UNLESS OTHERWISE NOTED)
X= ± —— 0.XX= ± —— ANGULAR ± ——
0.X= ± —— 0.XXX= ± —— FINISH ± ——

SCALE	NO. SHEETS	DRAWING NO.	SIZE	SHEET NO.
N/A	1	126Y-267912	D	39

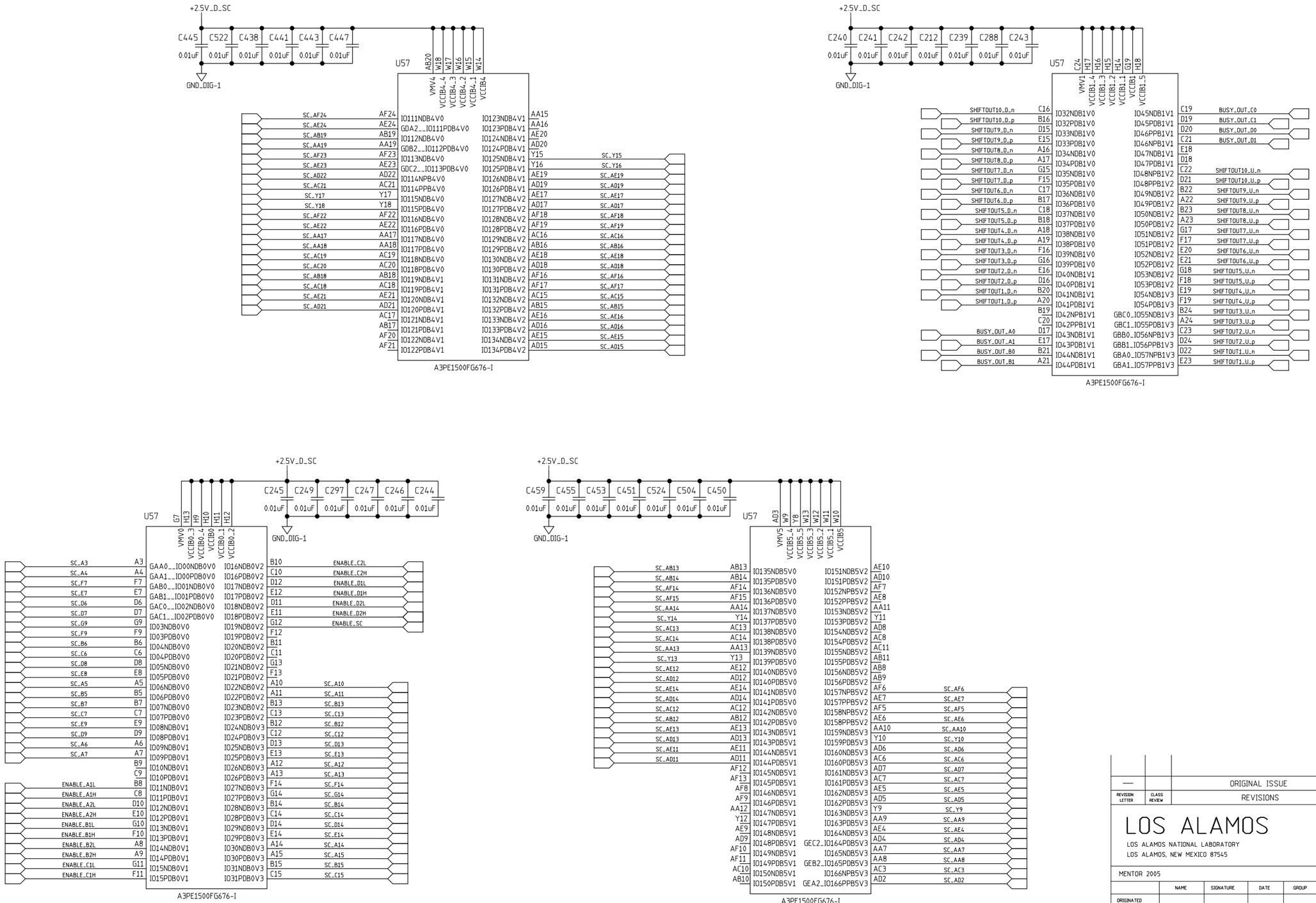

REVISION LETTER	CLASS REVIEW	REVISIONS	DATE	CHANGE BY	CHECK BY	APPROVED BY
—		ORIGINAL ISSUE	—	—	—	—

LOS ALAMOS

LOS ALAMOS NATIONAL LABORATORY
LOS ALAMOS, NEW MEXICO 87545

MENTOR 2005

	NAME	SIGNATURE	DATE	GROUP
ORIGINATED				
DESIGNED				
DRAWN	S. CHACON	S. CHACON	JUN 2008	AOT-IC
CHECKED	M. PROKOP	M. PROKOP	JUN 2008	AOT-RFE
PROJ. ENGR.	M. PROKOP	M. PROKOP	JUN 2008	AOT-RFE
APPROVED				
RELEASED				

CLASSIFICATION OF: DRAWING: U
PART: U DRAWING: U

TITLE

(P-25)

HEAVY QUARK DETECTOR
DATA AQUISITION SYSTEM

TOLERANCE (UNLESS OTHERWISE NOTED)
X= ± ——— 0.XX= ± ——— ANGULAR ± ———
0.X= ± ——— 0.XXX= ± ——— FINISH ± ———

SCALE	NO. SHEETS	DRAWING NO.	SIZE	SHEET NO.
N/A	1	126Y-267912	D	40

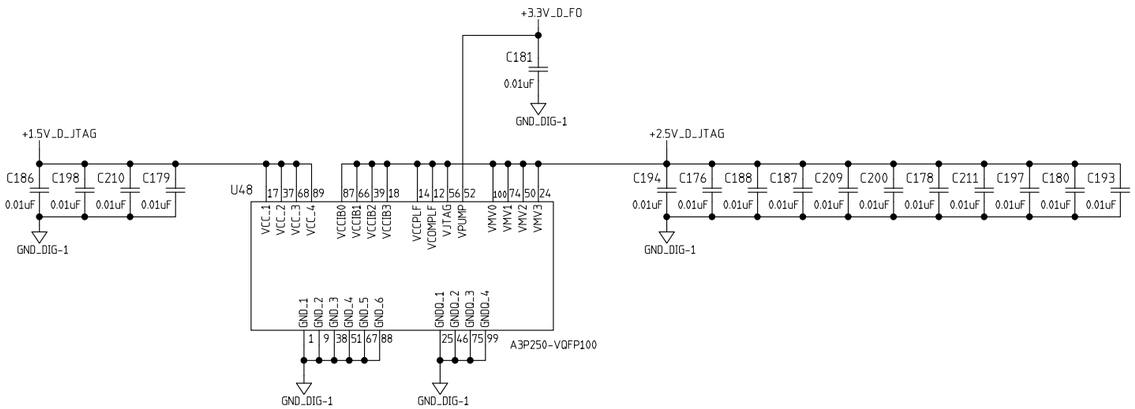

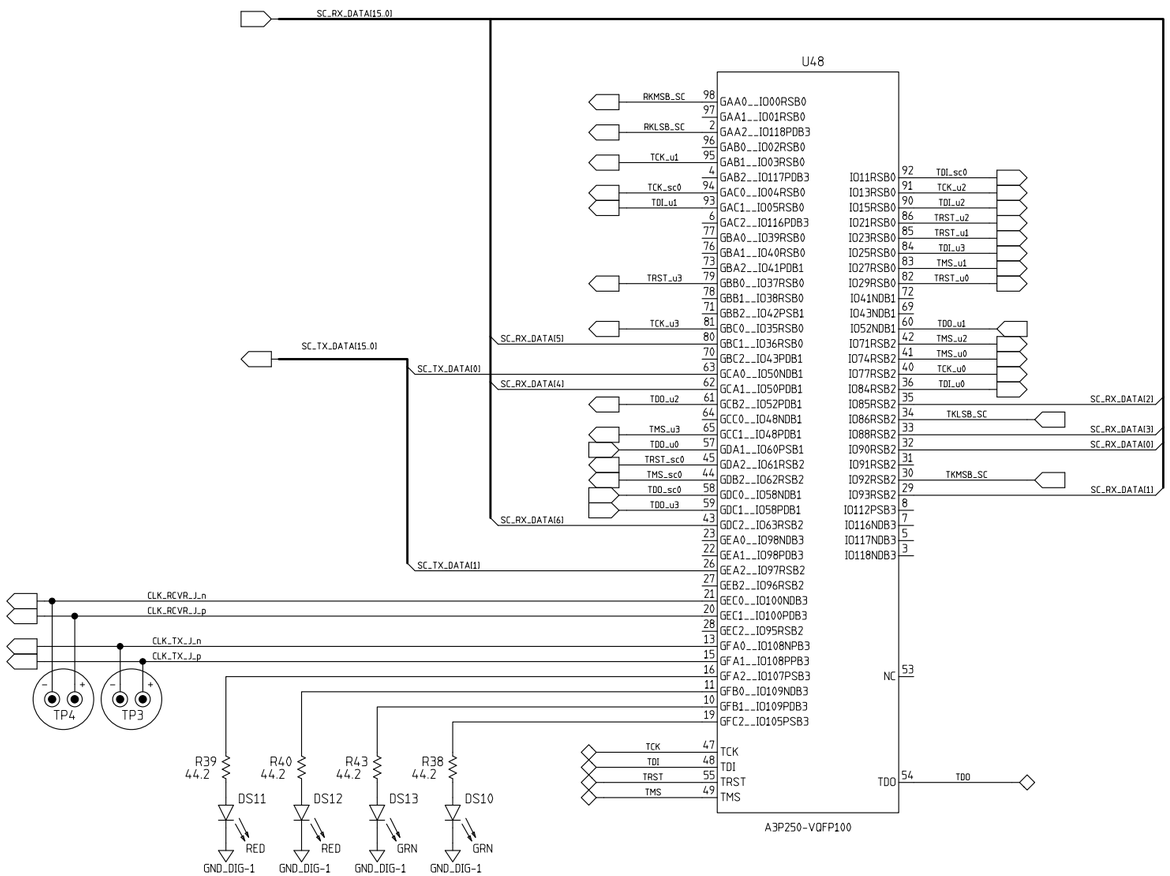

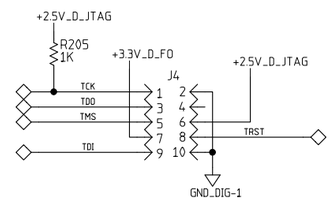

REVISION LETTER	CLASS REVIEW	REVISIONS	DATE	CHANGE BY	CHECK BY	APPROVED BY
—		ORIGINAL ISSUE	—	—	—	—

LOS ALAMOS

LOS ALAMOS NATIONAL LABORATORY
LOS ALAMOS, NEW MEXICO 87545

MENTOR 2005

	NAME	SIGNATURE	DATE	GROUP
ORIGINATED				
DESIGNED				
DRAWN	S. CHACON	S. CHACON	JUN 2008	AOT-IC
CHECKED	M. PROKOP	M. PROKOP	JUN 2008	AOT-RFE
PROJ. ENGR.	M. PROKOP	M. PROKOP	JUN 2008	AOT-RFE
APPROVED				
RELEASED				

CLASSIFICATION OF DRAWING: U
PART: U DRAWING: U

TITLE

(P-25)

HEAVY QUARK DETECTOR
DATA AQUISITION SYSTEM

TOLERANCE (UNLESS OTHERWISE NOTED)
X= ± ——— 0.XX= ± ——— ANGULAR ± ———
0.X= ± ——— 0.XXX= ± ——— FINISH ± ———

SCALE	NO. SHEETS	DRAWING NO.	SIZE	SHEET NO.
N/A	1	126Y-267912	D	41

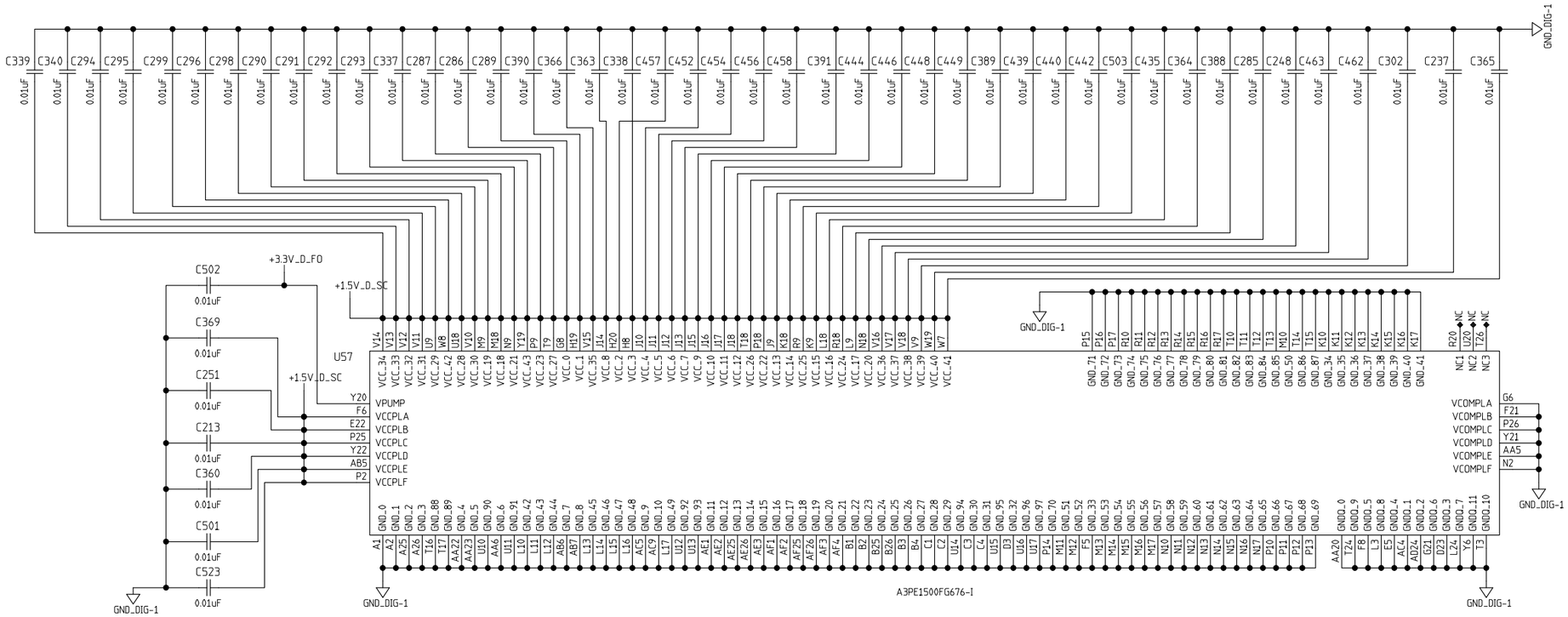

—		ORIGINAL ISSUE	—	—	—	—
REVISION LETTER	CLASS REVIEW	REVISIONS	DATE	CHANGE BY	CHECK BY	APPROVED BY

LOS ALAMOS

LOS ALAMOS NATIONAL LABORATORY
LOS ALAMOS, NEW MEXICO 87545

MENTOR 2005

	NAME	SIGNATURE	DATE	GROUP
ORIGINATED				
DESIGNED				
DRAWN	S. CHACON	S. CHACON	JUN 2008	AOT-IC
CHECKED	M. PROKOP	M. PROKOP	JUN 2008	AOT-RFE
PROJ. ENGR.	M. PROKOP	M. PROKOP	JUN 2008	AOT-RFE
APPROVED				
RELEASED				

CLASSIFICATION OF: DRAWING: U
PART: U DRAWING: U

TITLE
(P-25)
HEAVY QUARK DETECTOR
DATA AQUISITION SYSTEM

TOLERANCE (UNLESS OTHERWISE NOTED)
X= ± ——— 0.XX= ± ——— ANGULAR ± ———
0.X= ± ——— 0.XXX= ± ——— FINISH ± ———

SCALE	NO. SHEETS	DRAWING NO.	SIZE	SHEET NO.
N/A	1	126Y-267912	D	42

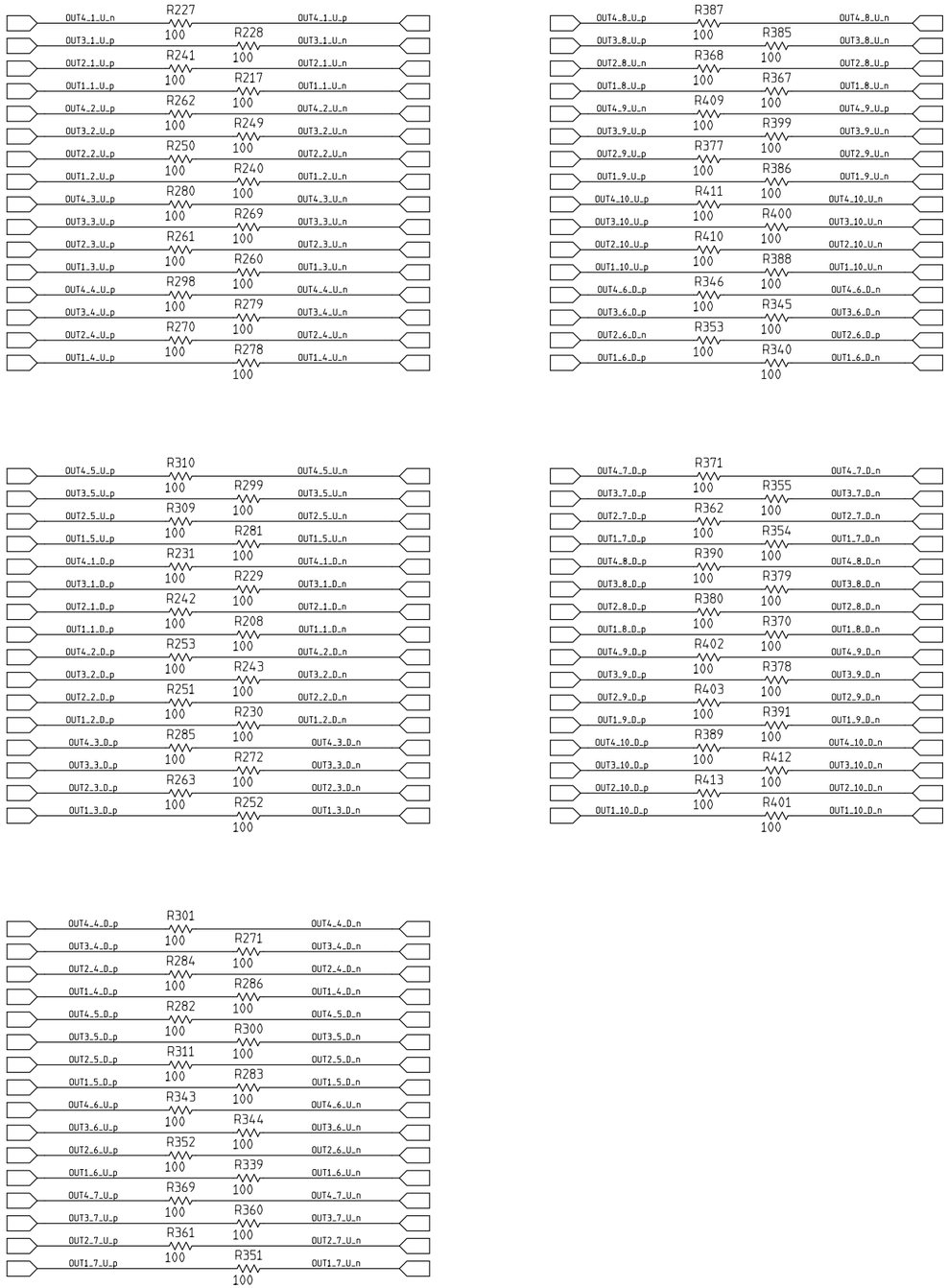

REVISION LETTER	CLASS REVIEW	REVISIONS	DATE	CHANGE BY	CHECK BY	APPROVED BY
—		ORIGINAL ISSUE	—	—	—	—

LOS ALAMOS

LOS ALAMOS NATIONAL LABORATORY
LOS ALAMOS, NEW MEXICO 87545

MENTOR 2005

	NAME	SIGNATURE	DATE	GROUP
ORIGINATED				
DESIGNED				
DRAWN	S. CHACON	S. CHACON	JUN 2008	AOT-IC
CHECKED	M. PROKOP	M. PROKOP	JUN 2008	AOT-RFE
PROJ. ENGR.	M. PROKOP	M. PROKOP	JUN 2008	AOT-RFE
APPROVED				
RELEASED				

CLASSIFICATION OF DRAWING: U
PART: U DRAWING: U

TITLE
(P-25)
HEAVY QUARK DETECTOR
DATA AQUISITION SYSTEM

TOLERANCE (UNLESS OTHERWISE NOTED)
X± ± ——— 0.XX± ± ——— ANGULAR ± ———
0.X± ± ——— 0.XXX± ± ——— FINISH ± ———

SCALE	NO. SHEETS	DRAWING NO.	SIZE	SHEET NO.
N/A	1	126Y-267912	D	43

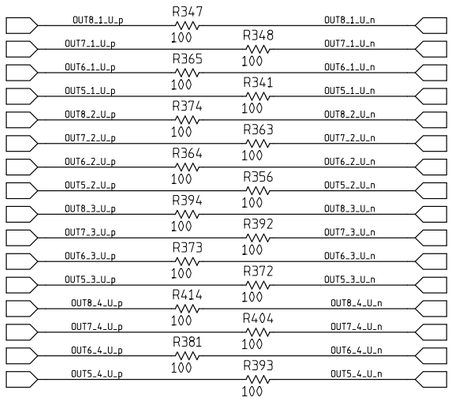

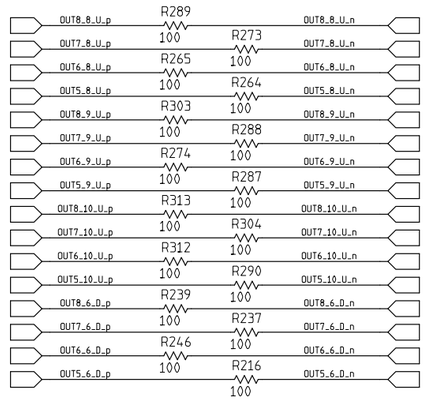

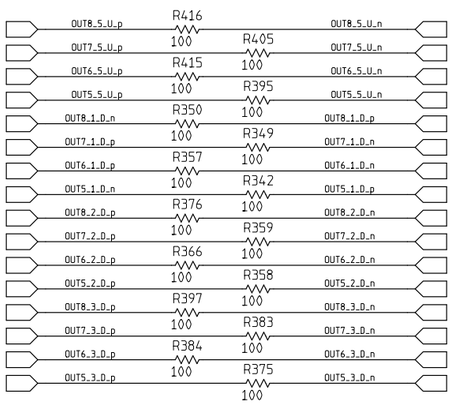

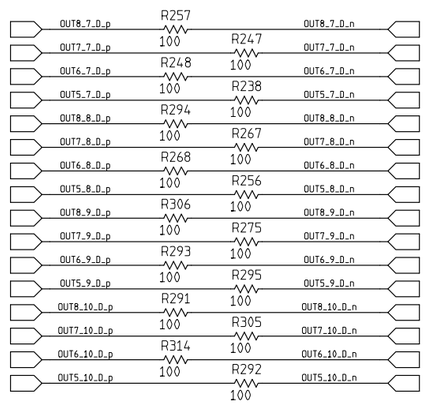

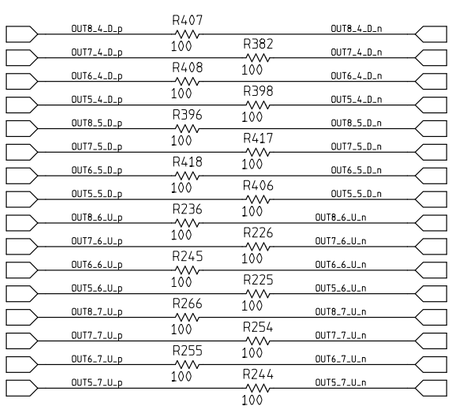

REVISION LETTER	CLASS REVIEW	REVISIONS	DATE	CHANGE BY	CHECK BY	APPROVED BY
—		ORIGINAL ISSUE	—	—	—	—

LOS ALAMOS
LOS ALAMOS NATIONAL LABORATORY
LOS ALAMOS, NEW MEXICO 87545

MENTOR 2005

	NAME	SIGNATURE	DATE	GROUP
ORIGINATED				
DESIGNED				
DRAWN	S. CHACON	S. CHACON	JUN 2008	AOT-IC
CHECKED	M. PROKOP	M. PROKOP	JUN 2008	AOT-RFE
PROJ. ENGR.	M. PROKOP	M. PROKOP	JUN 2008	AOT-RFE
APPROVED				
RELEASED				

CLASSIFICATION OF DRAWING: U
PART: U DRAWING: U

TITLE
(P-25)
HEAVY QUARK DETECTOR
DATA AQUISITION SYSTEM

TOLERANCE (UNLESS OTHERWISE NOTED)
X= ± ——— 0.XX= ± ——— ANGULAR ± ———
0.X= ± ——— 0.XXX= ± ——— FINISH ± ———

SCALE	NO. SHEETS	DRAWING NO.	SIZE	SHEET NO.
N/A	1	126Y-267912	D	44

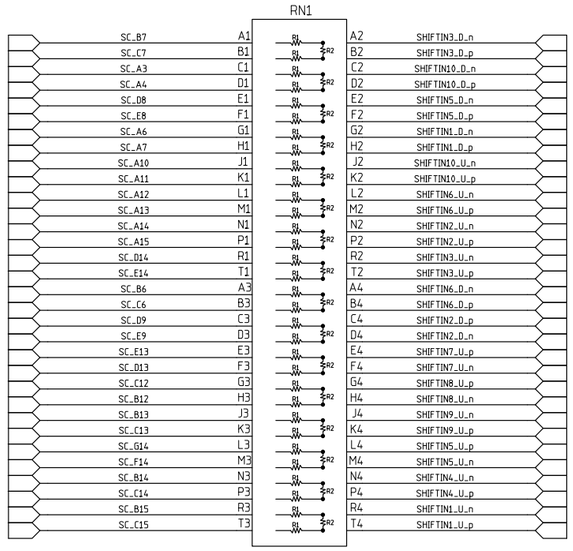

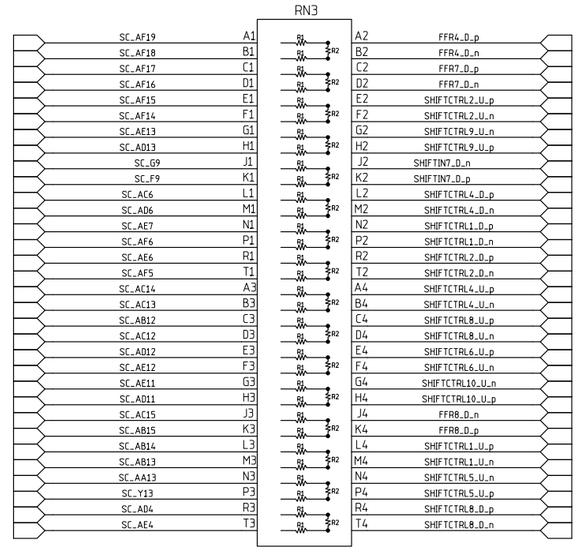

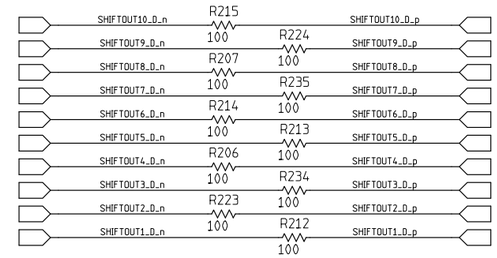

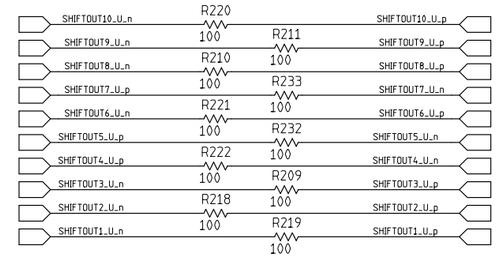

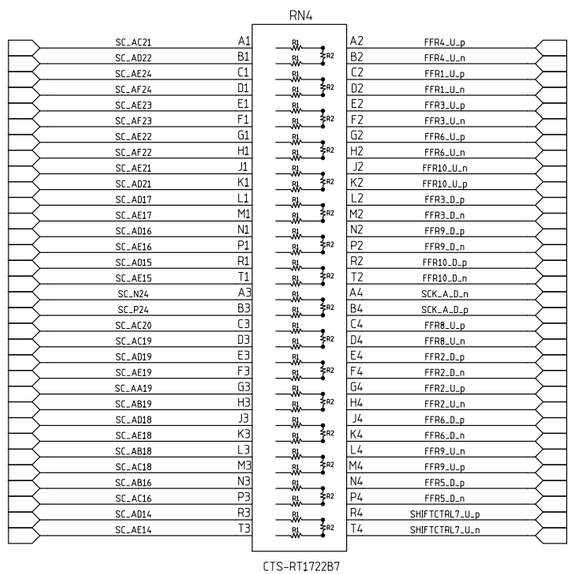

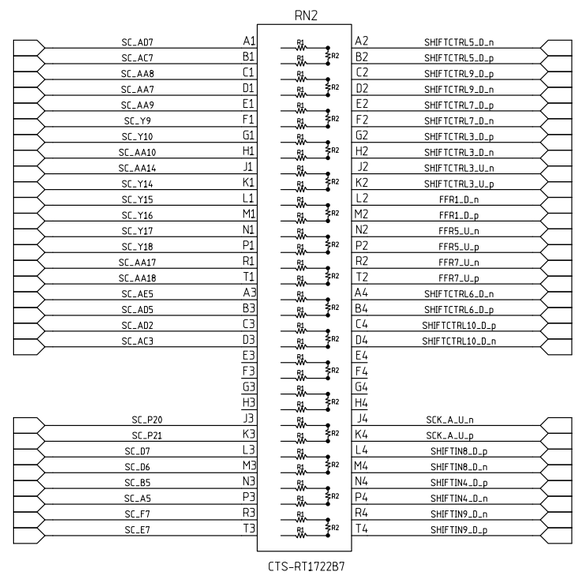

REVISION LETTER	CLASS REVIEW	REVISIONS	DATE	CHANGE BY	CHECK BY	APPROVED BY
—		ORIGINAL ISSUE	—	—	—	—

LOS ALAMOS

LOS ALAMOS NATIONAL LABORATORY
LOS ALAMOS, NEW MEXICO 87545

MENTOR 2005

	NAME	SIGNATURE	DATE	GROUP
ORIGINATED				
DESIGNED				
DRAWN	S. CHACON	S. CHACON	JUN 2008	AOT-IC
CHECKED	M. PROKOP	M. PROKOP	JUN 2008	AOT-RFE
PROJ. ENGR.	M. PROKOP	M. PROKOP	JUN 2008	AOT-RFE
APPROVED				
RELEASED				

CLASSIFICATION OF DRAWING: U
PART: U DRAWING: U

TITLE

(P-25)

HEAVY QUARK DETECTOR
DATA AQUISITION SYSTEM

TOLERANCE (UNLESS OTHERWISE NOTED)
X= ± —— 0.XX= ± —— ANGULAR ± ——
0.X= ± —— 0.XXX= ± —— FINISH ± ——

SCALE	NO. SHEETS	DRAWING NO.	SIZE	SHEET NO.
N/A	1	126Y-267912	D	45

PART NUMBER			PARTS LIST
PREFIX NUMBER	ITEM NUMBER	NUMBER REQD	DESCRIPTION

HEAVY QUARK DETECTOR

126Y-267912 REV: 0 8/29/2008

D6 - FAB NOTES

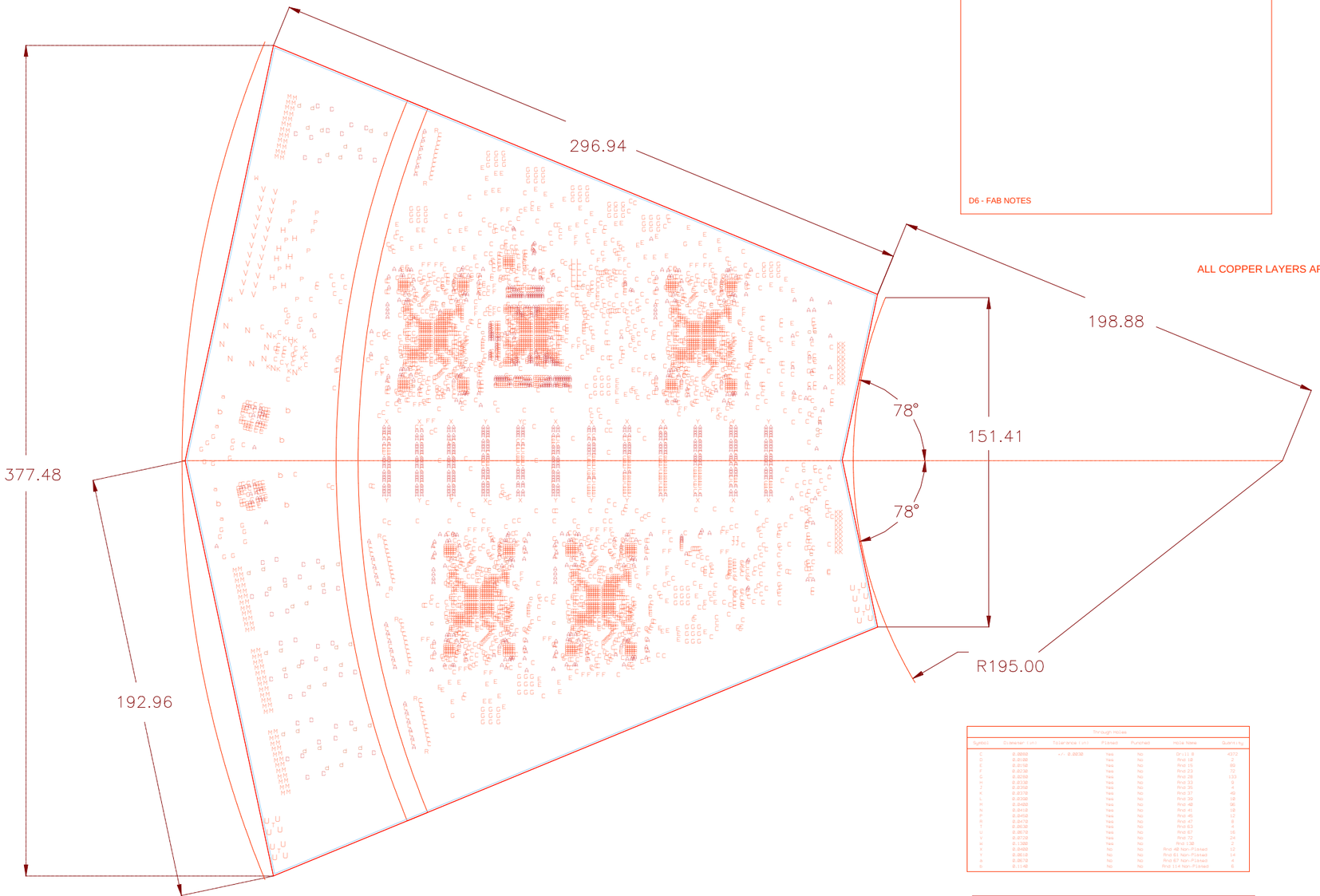

ALL COPPER LAYERS ARE 1/2 oz.

NOTES: (UNLESS OTHERWISE SPECIFIED)

1. MATERIAL : .082 THK FR-4, +/- .008. LAMINATE GLASS FIBER EPOXY FLAME RETARDANT PER IPC-4101.
2. COPPER PLATING : TOTAL ON THE SURFACE INCLUDING ORIGINAL CLADDING PLUS PLATED COPPER SHALL BE 1/2 OZ. MINIMUM ON SIGNAL LAYERS AND INTERNAL PLANE LAYERS.
3. FINAL PLATING FINISH ON SURFACE LAYERS SHALL BE IMMERSION GOLD OVER NICKEL PLATING
4. TRIM CARD TO DIMENSIONS SHOWN. DIMENSIONS ARE IN MILLIMETERS.
5. DO NOT SCALE DRAWING.
6. SEE DRILL TABLE FOR PLATING REQUIREMENTS.
7. HOLE DIAMETERS APPLY AFTER PLATING +/- .003.
8. USE THE FOLLOWING ARTWORK/STACKUP FOR LANL PN 126Y-267912 REV - 0
   - M1 - LAYER 1, CONTROLLED SIGNAL (50 OHMS) / POURED GROUND
   - M2 - LAYER 2, GROUND PLANE
   - M3 - LAYER 3, CONTROLLED SIGNAL (100 OHM DIFF)
   - M4 - LAYER 4, POWER PLANE
   - M5 - LAYER 5, CONTROLLED SIGNAL (100 OHM DIFF)
   - M6 - LAYER 6, GROUND PLANE
   - M7 - LAYER 7, CONTROLLED SIGNAL (100 OHM DIFF)
   - M8 - LAYER 8, POWER PLANE
   - M9 - LAYER 9, GROUND PLANE
   - M10 - LAYER 10, CONTROLLED SIGNAL (100 OHM DIFF)
   - M11 - LAYER 11, POWER PLANE PLANE
   - M12 - LAYER 12, CONTROLLED SIGNAL (100 OHM DIFF)
   - M13 - LAYER 13, GROUND PLANE
   - M14 - LAYER 14, SIGNAL
   - M15 - LAYER 15, POWER PLANE
   - M16- LAYER 16, CONTROLLED SIGNAL (50 OHMS) / POURED GROUND
   - M17 - SOLDERMASK, PRIMARY SIDE
   - M18 - SOLDERMASK, SECONDARY SIDE
   - M19 - SILKSCREEN, PRIMARY SIDE
   - M20 - SILKSCREEN, SECONDARY SIDE
   - M21 - SOLDERPASTE, PRIMARY SIDE
   - M22 - SOLDERPASTE, SECONDARY SIDE
   - D6 - FAB NOTES
9. SOLDER MASK (SMOBC) BOTH SIDES OF BOARD.
   SOLDER MASK ARTWORK (M17 & M18) CONTAIN ACTUAL PAD SIZES FOR COMPONENTS, VIAS, AND FIDUCIALS, SHOULD BE MODIFIED AS FOLLOWS PRIOR TO FABRICATION;
   A. SOLDER MASK OPENINGS FOR ALL COMPONENTS LANDS (SMT & THRU HOLE) SHOULD BE ENLARGED .005".
   B. USE ENCROACHED SOLDERMASK OPENING SIZES OF PLATED THRU HOLE SIZES PLUS .008" ON ALL VIAS, BOTH SIDES OF BOARD.
10. SILKSCREEN BOTH SIDES OF BOARD USING WHITE INK.
11. MANUFACTURE IN ACCORDANCE WITH IPC 6011 AND 6012- CLASS 2.
12. NO MODIFICATIONS OR REPAIRS WITHOUT PRIOR APPROVAL.
13. APPROVED MODIFICATIONS OR REPAIRS SHALL BE IN ACCORDANCE WITH IPC-R-700.

Through Holes

Symbol	Diameter (in)	Tolerance (in)	Plated	Punched	Hole Name	Quantity
C	0.0059	+/- 0.0030	Yes	No	Drill 8	4372
D	0.0180		Yes	No	Rnd 18	2
E	0.0150		Yes	No	Rnd 15	80
F	0.0230		Yes	No	Rnd 23	72
G	0.0280		Yes	No	Rnd 28	133
H	0.0330		Yes	No	Rnd 33	6
J	0.0350		Yes	No	Rnd 35	4
K	0.0370		Yes	No	Rnd 37	48
L	0.0390		Yes	No	Rnd 39	10
M	0.0400		Yes	No	Rnd 40	56
N	0.0410		Yes	No	Rnd 41	10
P	0.0450		Yes	No	Rnd 45	12
R	0.0470		Yes	No	Rnd 47	8
T	0.0630		Yes	No	Rnd 63	4
U	0.0670		Yes	No	Rnd 67	16
V	0.0720		Yes	No	Rnd 72	24
W	0.1300		Yes	No	Rnd 130	2
X	0.0480		No	No	Rnd 48 Non-Plated	12
Y	0.0610		No	No	Rnd 61 Non-Plated	14
Z	0.0670		No	No	Rnd 67 Non-Plated	4
b	0.1140		No	No	Rnd 114 Non-Plated	6

NC Drill Chart Span 1-8

Symbol	Diameter (in)	Tolerance (in)	Plated	Punched	Hole Name	Quantity
A	0.0059	+/- 0.0030	Yes	No	Drill 8	959
B	0.0470		Yes	No	Rnd 47	48

NC Drill Chart Span 9-16

Symbol	Diameter (in)	Tolerance (in)	Plated	Punched	Hole Name	Quantity
c	0.0059	+/- 0.0030	Yes	No	Drill 8	63
d	0.0470		Yes	No	Rnd 47	48

REVISION LETTER	CLASS REVIEW	REVISIONS	DATE	CHANGED BY	CHECKED BY	APPROVED BY
		RELEASED FOR FABRICATION				

LOS ALAMOS

LOS ALAMOS NATIONAL LABORATORY
LOS ALAMOS, NEW MEXICO 87545

CLASSIFICATION OF DRAWING UNCLASSIFIED
PART UNCLASSIFIED TITLE BLOCK UNCLASSIFIED

PROJECT
P-25
HEAVY QUARK DETECTOR
DATA AQUISITION SYSTEM

WG2005 (EXPEDITION)

	NAME	SIGNATURE	DATE	GROUP
ORIGINATED	PROKOP	PROKOP	6/08	AOT-RFE
DESIGNED	PROKOP	PROKOP	6/08	AOT-RFE
DRAWN	CHACON	CHACON	6/08	AOT-IC
CHECKED	PROKOP	PROKOP	6/08	AOT-RFE
PROJ ENGR	PROKOP	PROKOP	6/08	AOT-RFE
APPROVED	PROKOP	PROKOP	6/08	AOT-RFE
RELEASED				

TOLERANCE (UNLESS OTHERWISE NOTED)
X = - 0.XX = .01 ANGULAR = -
0.X = - 0.XXX = -010 FINISH = 125

SCALE	TOTAL SHEETS	DRAWING NO.	SIZE	SHEET NO.
N/A	1	126Y-267912	D	1

BILL OF MATERIALS (BOM) FOR HEAVY QUARK DETECTOR DATA ACQUISITION SYSTEM 126Y-267912

ITEM	QTY	REF DES	DESCRIPTION	VENDOR	VALUE	FOOTPRINT	PART NO	NOTES
1	6	C1,C6,C11,C70,C154,C173	CAPACITOR,10V,CHIP 10%	KEMET	1uF	0805	C2012X5R1A105K	
2	5	C2,C12,C67,C155,C172	CAPACITOR,25V,CHIP	PANASONIC	2.2uF	0805	ECJ-2FF1E225Z	
3	20	C3-C4,C10,C13-C17,C21-C22,C32,C42-C44,C147,C151,C168-C171	CAPACITOR,6.3V,CERAMIC CHIP	PANASONIC	10uF	1206	ECJ-3YB0J106K	
4	18	C5,C9,C23,C38,C140,C152,C184,C190,C541,C545,C561,C567-C568,C573,C596,C653,C808-C809	CERAMIC CAP, 1000pf 10% 25v	PANASONIC	0.001uF	0201	ECJ-ZEB1E102K	
5	49	C7-C8,C20,C35,C47,C49,C52,C54,C59,C74,C79-C80,C85,C88-C90,C93-C94,C111-C112,C117-C119,C136-C137,C141, C144, C150, C153,C177,C182,C322,C512,C538-C539,C542,C550,C553-C554,C556,C559,C564, C566,C576-C577,C670,C687,C803,C806	CAPACITOR,16V,CHIP	PANASONIC	0.1uF	0603	ECJ-1VB1C104K	
6	661	C18-C19,C24-C31,C33-C34,C36-C37,C39-C41,C50-C51,C57-C58,C60-C61,C64-C66,C68-C69,C71-C73,C75-C78,C82-C83,C109-C110,C113-C116,C120-C123,C126-C129,C132-C135,C138-C139,C142-C143,C148-C149,C156-C167,C176,C178-C181,C183,C185-C189,C191-C321,C323-C350,C352-C401,C403-C511,C513-C531,C534-C537,C540,C543-C544,C546,C560,C562-C563,C565,C569-C572,C578-C595,C597-C652,C654-C669,C671-C686,C688-C802,C804-C805,C807	CAPACITOR,6.3V, CHIP	PANASONIC	0.01uF	0201_.012SQ_.023SP	ECJ-ZEB0J103K	
7	24	C45-C46,C55-C56,C62-C63,C107-C108,C130-C131,C145-C146,C351,C402,C532-C533,C547,C549,C552,C555,C557-C558,C574-C575	CAPACITOR,50V,CHIP	PANASONIC	150pF	0603	ECJ-1VC1H151J	
8	6	C48,C53,C86-C87,C124-C125	10uf 25v 10% CERAMIC MULTILAYER CAP	TAIYO YUDEN	10uF	1210	TMK325BJ106KN-T	
9	6	C81,C84,C91-C92,C548,C551	10uf 20% 6.3v CAP	PANASONIC	10uF	0805	EJC-2FB0J106M	
10	12	C95-C106	CAP 50V CHIP (10,000pF)	PANASONIC	0.01uF	0603	ECJ-1VB1H103K	PLACEHOLDER ON THE BOARD
11	2	C174-C175	HIGH TEMP CAP, 3900pf 10% 200v	AMC	0.0039uF	C0805	201T15W392KV4	
12	28	DS1-DS10,DS13-DS17,DS19,DS24,DS26,DS29,DS32-DS35,DS40-DS44	LED GREEN CLEAR 0603 SMD (DIG---160-1183-1-ND)	LITE-ON		LED2_SMD_0603_.063X.031B_ST	LTST-C190GKT	
13	16	DS11-DS12,DS18,DS20-DS23,DS25,DS27-DS28,DS30-DS31,DS36-DS39	LED RED CLEAR 0603 SMD	LITE-ON		LED2_SMD_0603_.063X.031B_ST	DIGIKEY_160-1181-1-ND	
14	4	J1,J26,J33,J35	.100" PITCH, DUAL ROW RA HEADER	MOLEX		901303224	90130-3224	
15	4	J2,J24,J32,J34	2MM 24 PIN, 2 ROW RECEPTACLE	HRS		CON_DF11_24DS_2DSA	DF11-24DS-2V20	
16	1	J3	RIGHT ANGLE HEADER, SCREW MOUNT, 24 PIN	TYCO ELECTRONICS		CONN_HEADER_24P_RA	2-1586043-4	
17	1	J4	CONNECTOR,JTAG10,RIGHT ANGLE	SAMTEC		J10HLR	CA-10HLR-IC-SPT	
18	5	J5,J9-J10,J29-J30	MICRO MATE HEADER, TFML SERIES	SAMTEC		TFML-110	TFML-110-02-S-D	
19	5	J6-J8,J27-J28	.100 x .100" Low Profile SMT Straight Header	3M		CONN_JTAG_10	N2510-6VOC-RB-WD	
20	12	J11-J22	LOW PROFILE PLUG	VEND		CON_P50LE_SERIES	P50LE-050P1-SML-TGF	
21	1	J23	2MM PITCH, DUAL ROW RA HEADER	MOLEX		CONN_HEADER_4P_RA	87833-0420	
22	4	J25,J31,J36-J37	SMA RA NICKEL PLATED	JOHNSON		J5RSMA	142-0701-306	
23	4	L1-L3,L6	INDUCTOR, 1.0UH	COILCRAFT	1uH	L1008	1008CS-102XJLB	
24	2	L4-L5	6.8nH 800ma 10% INDUCTOR	EPCOS INC.	0.0068uH	0805	B82498F3689K	
25	44	PTC1-PTC6,PTC17-PTC54	PTC/POLYSWITCH 1.1adc@6vdc	RAYCHEM		MICROSMD_F	MICROSMD110F	
26	6	PTC7-PTC9,PTC11,PTC14,PTC16	PTC/POLYSWITCH 6adc@30vdc	RAYCHEM		RUE_F_300-900	RUEF600	
27	4	PTC10,PTC12-PTC13,PTC15	PTC/POLYSWITCH 2.5adc@30vdc	RAYCHEM		RUE_F_90-250	RUEF250	
28	2	P1-P2	2MM 20 PIN, 2 ROW RECEPTACLE	HRS		CON_DF11-20DS_2DSA	DF11-20DS-2DSA	
29	4	RN1-RN4	LVDS and LVPECL FPGA TERMINATION NETWORK	CTS CORP		BGA_FG64	CTS-RT1722B7	WILL PROVIDE
30	6	R1,R5,R11,R89,R177,R195	RESISTOR, 1/16 W ,1% CHIP	PANASONIC	10	R0402A	ERJ-2RKF10R0X	
31	14	R2-R3,R6-R9,R18-R19,R42,R172,R196-R199	RES 124 OHM 1/20W 1% 0201 SMD	VISHAY DALE	124	0201_.012SQ_.023SP	CRCW0201124RFNED	
32	30	R4,R10,R12,R20,R38-R40,R43,R45,R49,R55-R60,R73-R74,R79-R80,R148,R152,R156-R157,R162-R163, R166-R167,R194,R200	RES 44.2 OHM 1/16W 1% 0402 SMD	VISHAY DALE	44.2	R0402A	CRCW040244R2FNED	
33	1	R13	RES 0.0 OHM 1/20W 5% 0201 SMD	VISHAY DALE	0	0201_.012SQ_.023SP	CRCW02010000Z0ED	PLACEHOLDER ON THE BOARD
34	25	R14,R21,R24,R34-R37,R48,R52,R76,R81,R96,R99,R131,R134,R151,R155,R178,R181,R188,R193, R296-R297,R307-R308	RES 10.0K OHM 1/20W 1% 0201 SMD	VISHAY DALE	10K	0201_.012SQ_.023SP	CRCW020110K0FNED	
35	10	R15,R30-R31,R159-R160,R202-R204,R335,R338	RES 49.9 OHM 1/20W 1% 0201 SMD	VISHAY DALE	49.9	0201_.012SQ_.023SP	CRCW020149R9FNED	
36	206	R16,R28-R29,R32-R33,R90-R93,R126-R128,R138-R142,R158,R161,R171,R186-R187,R191-R192, R201, R206-R257,R260-R275,R278-R295, R298-R306,R309-R314,R339-R418	RES 100 OHM 1/20W 1% 0201 SMD	VISHAY DALE	100	0201_.012SQ_.023SP	CRCW0201100RFNED	
37	5	R17,R64,R86,R105,R121	RES 121 OHM 1/16W 1% 0402 SMD	VISHAY DALE	121	R0402A	CRCW0402121RFNED	
38	32	R22-R23,R25-R26,R46-R47,R50-R51,R77-R78,R82-R83,R94-R95,R97-R98,R132-R133,R135-R136,R149-R150,R153-R154,R179-R180,R182-R185,R189-R190	RES 0.0 OHM 1/20W 5% 0201 SMD	VISHAY DALE	0	0201_.012SQ_.023SP	CRCW02010000Z0ED	PLACEHOLDER ON THE BOARD
39	3	R27,R44,R174	RES 294 OHM 1/16W 1% 0402 SMD	VISHAY DALE	294	R0402A	CRCW0402294RFNED	
40	2	R41,R173	RES 365 OHM 1/20W 1% 0201 SMD	VISHAY DALE	365	0201_.012SQ_.023SP	CRCW0201365RFNED	
41	46	R53-R54,R61-R62,R65-R66,R68-R69,R84-R85,R87-R88,R122-R123,R129-R130,R144-R147,R164-R165,R168-R169,R258-R259,R276-R277, R315-R320,R322,R324,R326-R327,R329-R334,R336-R337	RESISTOR,1/16W,1%,CHIP	DALE	49.9	0603	CRCW060349R9FRT1	
42	12	R63,R67,R70-R72,R75,R137,R143,R170,R175-R176,R205	RES 1.00K OHM 1/20W 1% 0201 SMD	VISHAY DALE	1K	0201_.012SQ_.023SP	CRCW02011K00FNED	
43	8	R100-R102,R106-R108,R323,R328	RESISTOR,1/16W,1%,CHIP	DALE	4.99K	0603	CRCW06034991FRT1	
44	2	R103,R124	RESISTOR,1/16W,1%,CHIP	DALE	100	0603	CRCW06031000FRT1	
45	2	R104,R125	RESISTOR,1/16W,1%,CHIP	DALE	1K	0603	CRCW06031001FRT1	
46	12	R109-R120	RESISTOR,1/16W,1%,CHIP	PANASONIC	0	0603	ERJ-3GEY0R00V	
47	2	R321,R325	RESISTOR,1/10W,1%,CHIP	YAGEO	33	0603	9C06031A33R0FKHFT	
48	36	TP1-TP36	PROBE TEST POINT				TPOINT_2P	
49	6	U1,U6,U9,U70,U138,U161	3A Low Dropout Regulator	LINEAR TECHNOLOGY		TO_DDPACK_LINEAR_MPACKAGE	LT1587CM-1.5	
50	84	U2,U4-U5,U7,U11-U12,U14,U16,U18-U19,U21,U23-U28,U30-U36,U40,U42,U49-U52,U55,U59,U64-U65,U67,U75-U76,U78-U88,U92-U96,U99, U101-U102,U104-U112,U123,U127,U130,U135-U136,U139-U140,U146,U148-U155,U157-U159	SURFACE MOUNT TEST POINT ON TAPE AND REEL	KEYSTONE		TP5015	5015	
51	6	U3,U8,U10,U20,U156,U160	4.6A Low Dropout Regulator	LINEAR TECHNOLOGY		TO_DDPACK_LINEAR_MPACKAGE	LT1585CM	
52	1	U13	PROGRAMMABLE LVDS OSCILLATOR	CARDINAL COMPONENTS INC.		CPPV7	CPPV7T-BR-105.00	
53	9	U15,U39,U41,U74,U77,U114-U115,U145,U147	SINGLE/DUAL LVDS LINE RECEIVERS	MAXIM		SOT23-8L	MAX9113EKA	
54	1	U17	3A Low Dropout Regulator	LINEAR TECHNOLOGY		TO_DDPACK_LINEAR_MPACKAGE	LT1587CM-3.3	
55	2	U22,U124	4-PORT LVDS REPEATERS	MAXIM		TSSOP16	MAX9169EUE	
56	17	U29,U44-U47,U68-U69,U71-U72,U117-U120,U141-U144	1.6 TO 2,7 GBPS TRANSCEIVER	TEXAS INSTRUMENTS		QFP64_.5MMSP_.472W_THERMAL	TLK2711JR-RCP	
57	1	U37	4-PORT LVDS REPEATERS	MAXIM		TSSOP16	MAX9170EUE	
58	2	U38,U131	4.6A Low Dropout Regulator	LINEAR TECHNOLOGY		TO_DDPACK_LINEAR_MPACKAGE	LT1587CM	
59	1	U43	800 mA Regulator, 2.5V Output	LINEAR TECHNOLOGY		SOT223	LT1118CST-2.5	
60	1	U48	ProASIC3 Flash Family FPGA	ACTEL		VQFP100	A3P250-VQFP100	
61	12	U53,U61,U66,U103,U122,U128,U162-U164,U167-U169	QUAD RAIL TO RAIL 150MHz AMP	ANALOG DEVICES		SO14NB	AD8044AR-14	
62	8	U54,U60,U63,U73,U113,U121,U126,U129	OPIC PHOTOCOUPLER	SHARP		PC412S	PC412S0NIP0F	
63	5	U56-U58,U132-U133	ProASIC 3E FLASH FPGA	ACTEL		BGA676	A3PE1500FG676-I	
64	1	U62	Optical Transciever	AGILENT		HFBR-5720	AFBR-57M5APZ	
65	1	U62	SFP CAGE ASSEMBLY (CAGE COVER)	MOLEX			73927-0020	
66	1	U62	SFP CAGE ASSEMBLY (CAGE BASE)	MOLEX			73927-0040	
67	1	U62	PT CONNECTOR ASSEMBLY, 20 POSITION, SFP, 0.8MM	TYCO ELECTRONICS			1367073-1	
68	2	U89,U98	DUAL 10-BIT DIGITAL TO ANALOG CONVERTER WITH POWER DOWN	TEXAS INSTRUMENTS		SO8NB	TLV5617AID	
69	2	U90,U97	PRECISION MICROPOWER, LOW DROPOUT VOLTAGE REFERENCES	ANALOG DEVICES		SO8NB	REF191ES	
70	2	U91,U100	PARALLEL FIBER OPTIC MODULE- TRANSMITTER	AVAGO		AFBR-732B_T	HFBR-772BEZ	WILL PROVIDE
71	2	U91,U100	100 POSITION MEG-ARRAY CONNECTOR	FCI CONNECT			84153-101	
72	1	U116	DUAL 1:5 DIFFERENTIAL CLOCK DRIVER	MAXIM		TQFP32	MAX9317AECJ	
73	2	U125,U134	10-PORT LVDS REPEATERS w/ 100 OHM DRIVE	MAXIM		TSSOP28	MAX9153EUI	
74	1	U137	PROGRAMMABLE LVDS OSCILLATOR	CARDINAL COMPONENTS INC.		CPPV7	CPPV7T-BR-125.00	
75	2	U165-U166	QUAD ANALOG SWITCH	ANALOG DEVICES		SO16NB	ADG713BR	

Total Parts Used: 1584