PHENIX

TECHNICAL SUPPORT 2010

PHENIX WEEKLY PLANNING

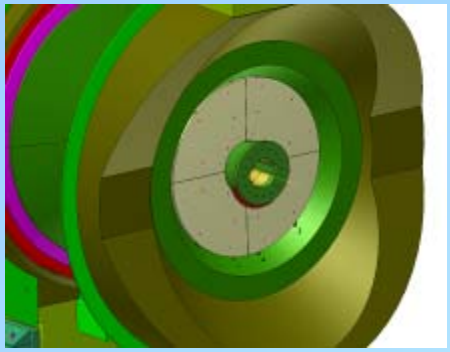

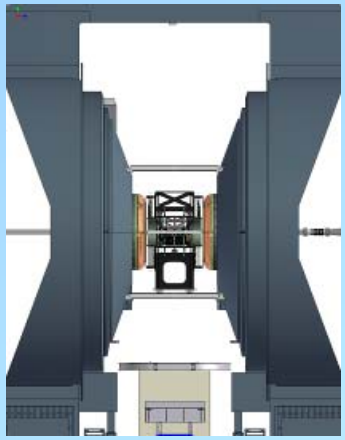

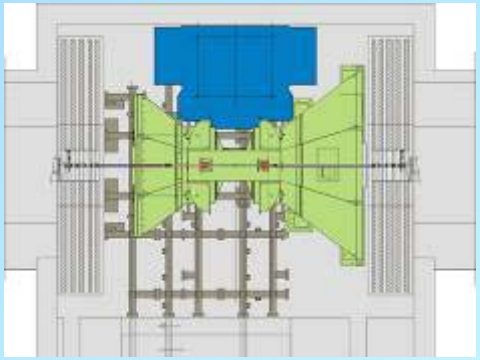

5/6/2010

Don Lynch

Ongoing Tasks for Run 10

TECHNICAL SUPPORT 2010

Task	Start Date	End Date
Install rack components in RPC3 N racks	in progress	6/1/2010
Attach cables to RPC3 N racks and to Detector ½ octants	in progress	6/1/2010
Commissioning Tests (HV, Mixed gas and Freon only)	5/5/2010	6/11/2010
Send mass flowmeters out for recalibration (DC/PC, MuID, TOF.W)	In Progress	6/30/2010
AH Crane 110 switch for lockout	In Progress	6/30/09

PHENIX Startup Checklist Status

Item	Responsibility	Status
Item 12: Dumb Waiter	Lynch	Done!!

PHENIX

TECHNICAL SUPPORT 2010

This Week:

- Yesterday's Maintenance/access:
  - RPC prep for commissioning tests
  - ZDC LV repaired
  - ERT E. LV failed again, 5V driver and both boosters replaced
- Run 10 tech support
- Future upgrade support as necessary
- Complete VTX support structure design & analysis
- VTX Big Wheel re-design (brazements, vendor visit)
- Complete RPC absorber design
- 2010 summer shutdown prep continues:

  VTX & BP assembly/installation parts & fixtures procurement & fabrication

  RPC3 S assembly/installation fixtures parts & fixtures procurement & fabrication
- Evaluate AH ramp ground water problems with PE and CAD

PHENIX

RPC3 N Commissioning

TECHNICAL SUPPORT 2010

PHENIX

RPC3 N Commissioning

TECHNICAL SUPPORT 2010

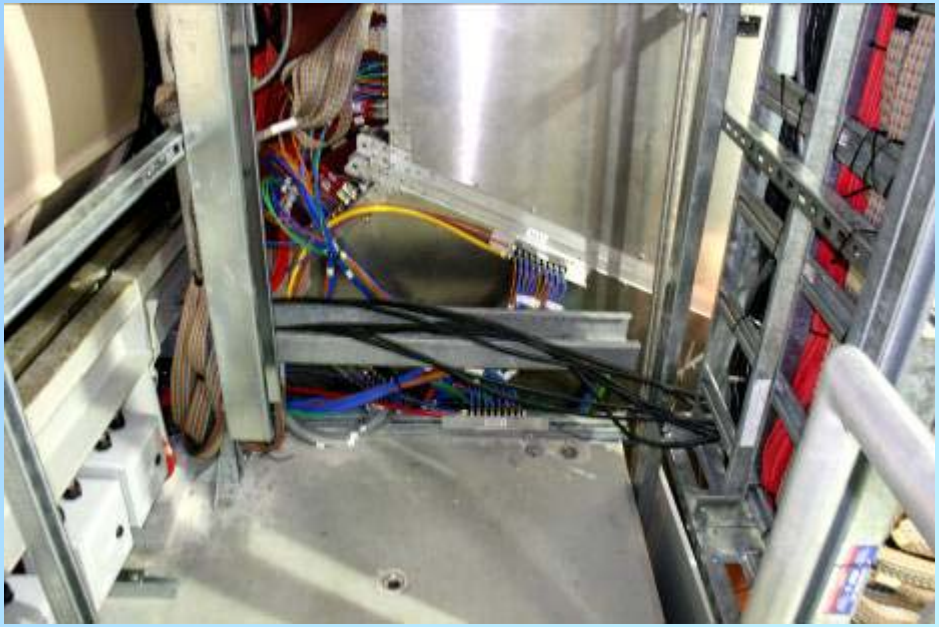

RPC3 N Commissioning

TECHNICAL SUPPORT 2010

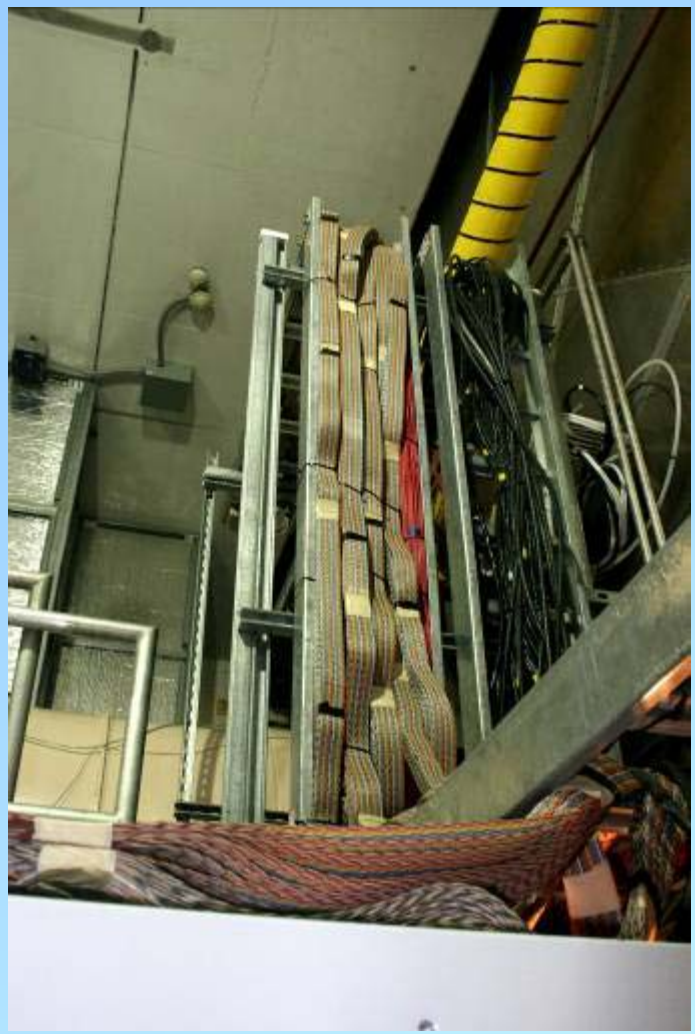

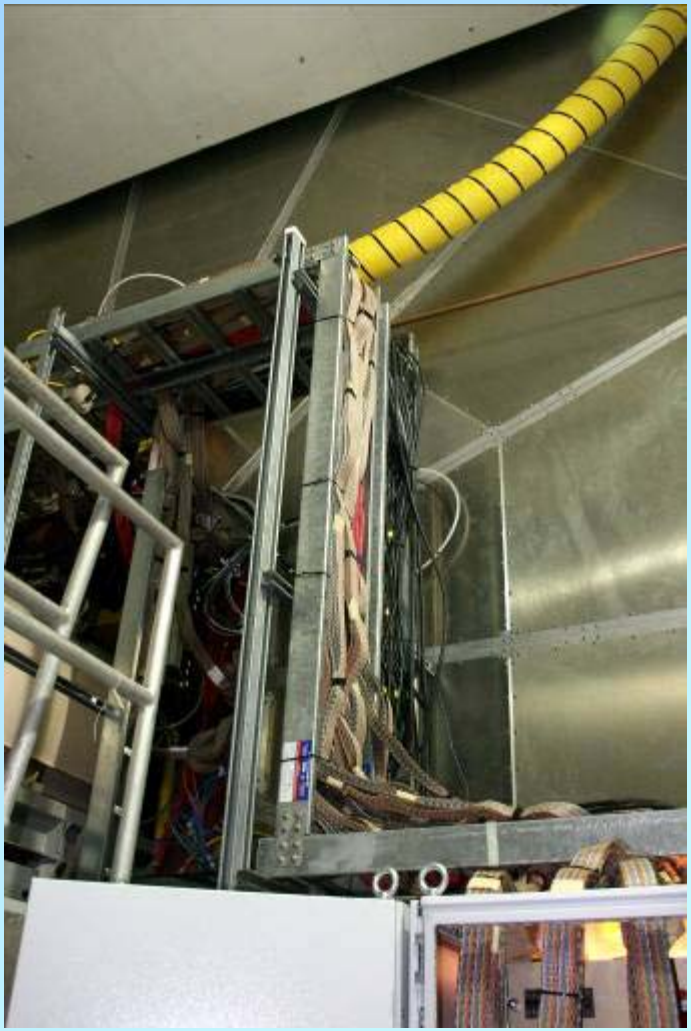

PHENIX

RPC3 N Commissioning

TECHNICAL SUPPORT 2010

RPC3 N Commissioning

TECHNICAL SUPPORT 2010

Next Week

PHENIX

TECHNICAL SUPPORT 2010

Prep for RPC 3N

Track and prep for 2010 shutdown

Prepare for VTX, RPC3S, BP & absorber installation reviews

Complete design for VTX support and Bigwheels

Design of installation tools and fixtures for VTX

Design of installation tools and fixtures for absorber

Planning for DC repairs

Future upgrades support

PHENIX

TECHNICAL SUPPORT 2010

2010 Tasks

2010 Tasks	Start Date	End Date
Run 10	In progress	6/21
VTX Installation Plan (Final)	In progress	5/31
RPC3S Installation Plan (Final)	In progress	5/31
Design support structure, alignment scheme for VTX	In progress	3/31
Specify and procure electronics racks and support equipment for VTX	In progress	5/31
Fabricate beam pipe supports	In progress	5/1
Beampipe NEG coating (CERN)	4/15?	5/31?
Fabricate/procure parts for RPC3 S installation	In progress	5/1
Fabricate/procure parts for VTX installation	In progress	6/1
End of run 10	6/23	6/23
End of Run Party	~6/11	~6/11
Prep IR for shutdown	6/1	7/1
Complete unfinished business for MuTrgr FEE & RPC3 North	6/23	8/1
Install Beam pipe	7/1	9/1
Install VTX	8/1	11/1
Install RPC3 South	6/23	11/1
2010 Shutdown Other Tasks	6/23	12/1

PHENIX

TECHNICAL SUPPORT 2010

South BBC Cavity BP support

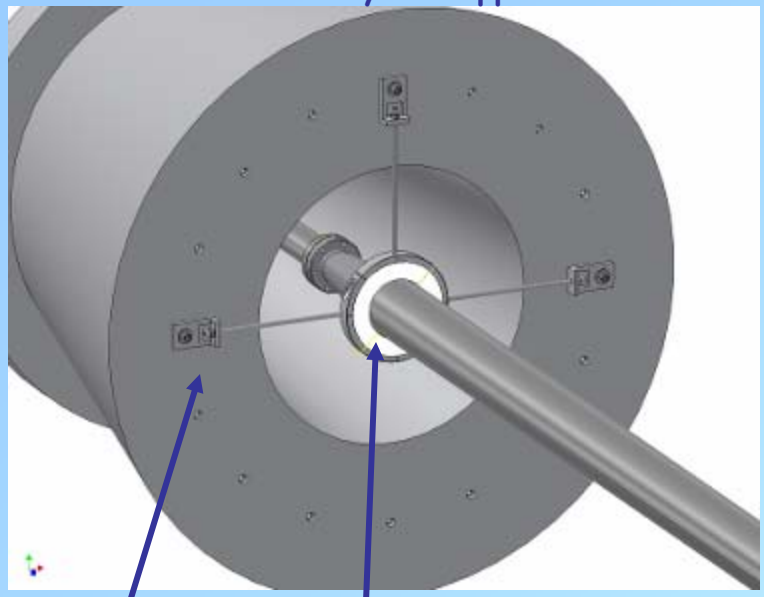

CM central BP supports (2 req'd)

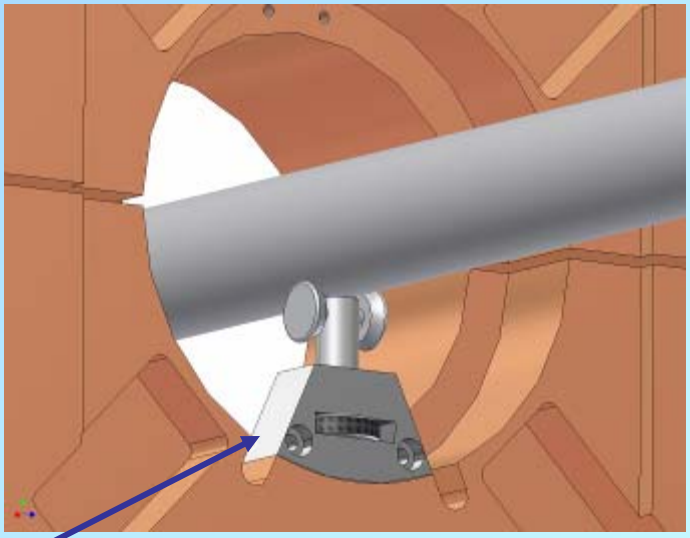

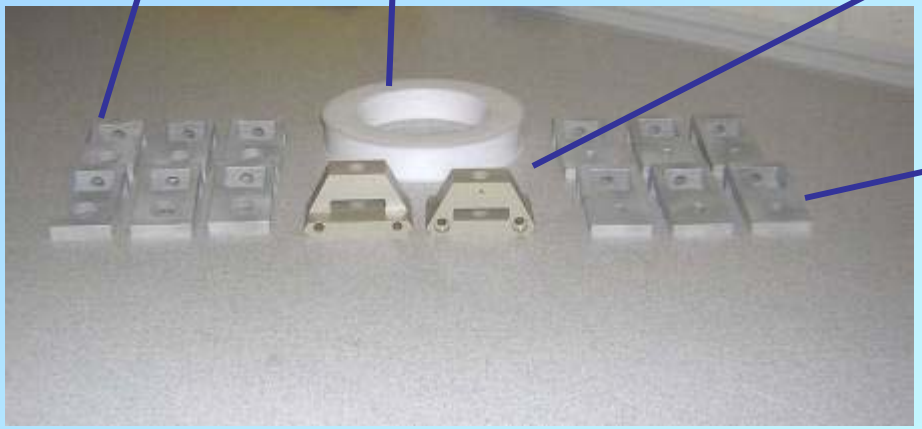

BP support components from CS

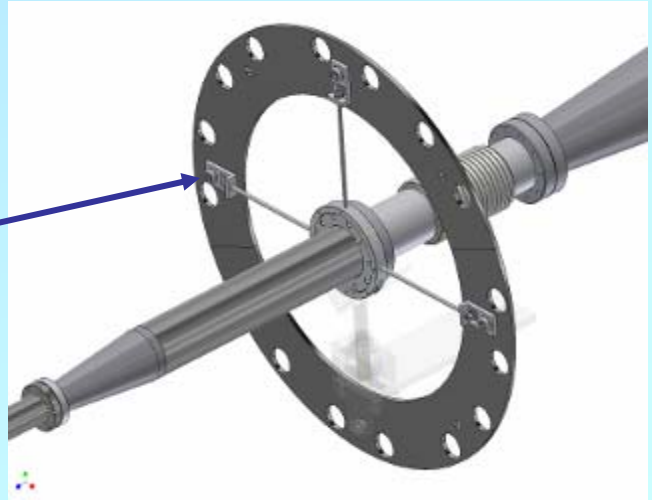

North MPC Cavity BP support

PHENIX

TECHNICAL SUPPORT 2010

PHENIX

TECHNICAL SUPPORT 2010

VTX Assembly Fixture (3 others are similar)

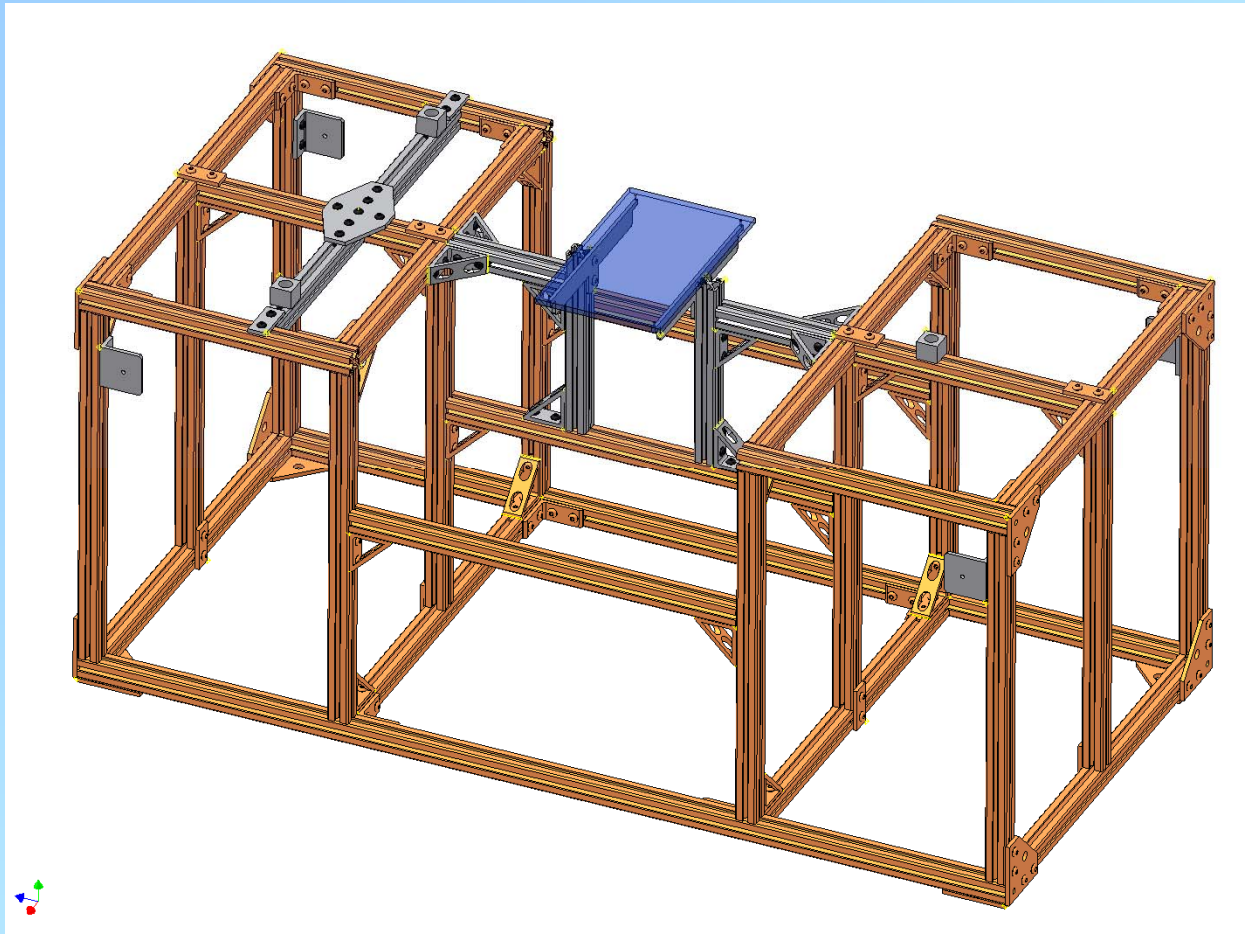

PHENIX

TECHNICAL SUPPORT 2010

VTX Support Structure Base Assembly Design In Progress Fixtures being re-designed at PHENIX

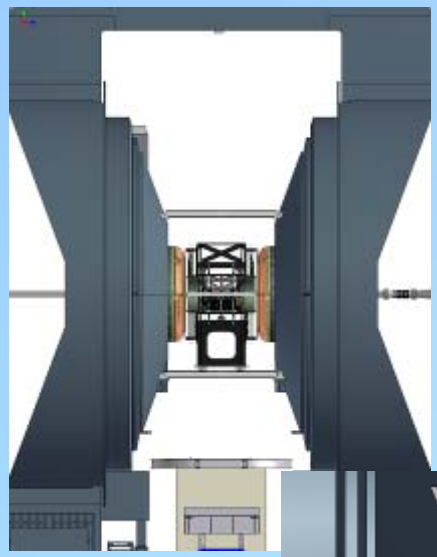

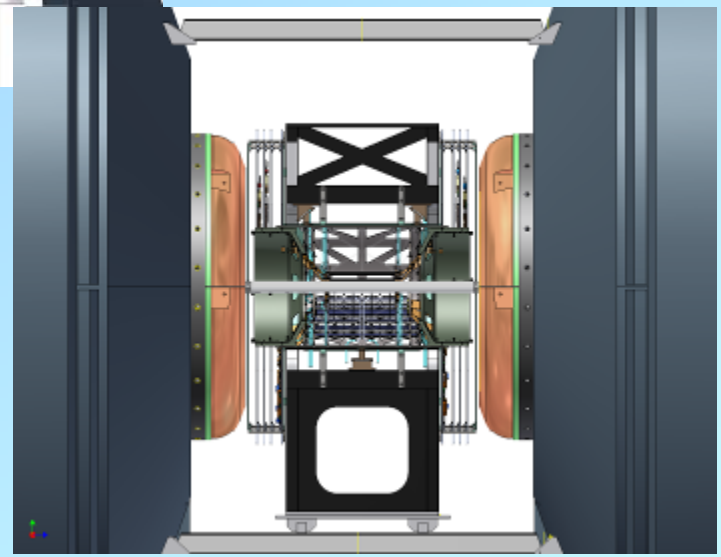

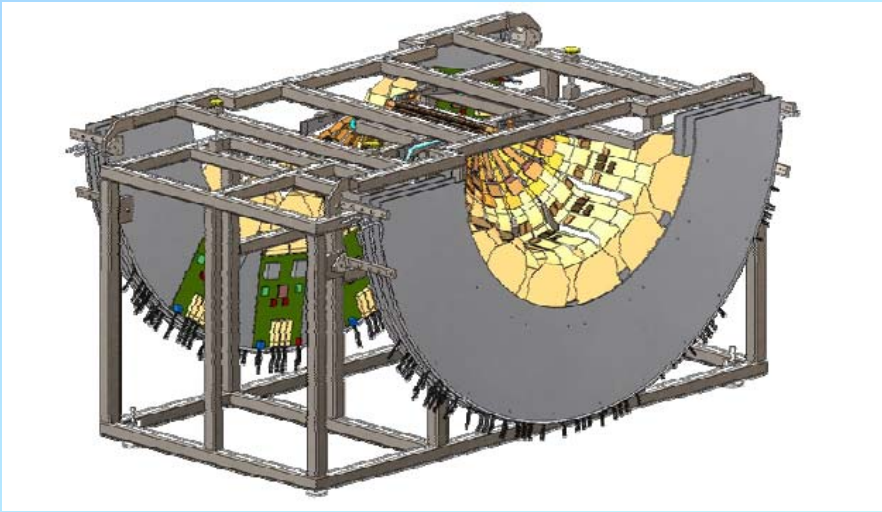

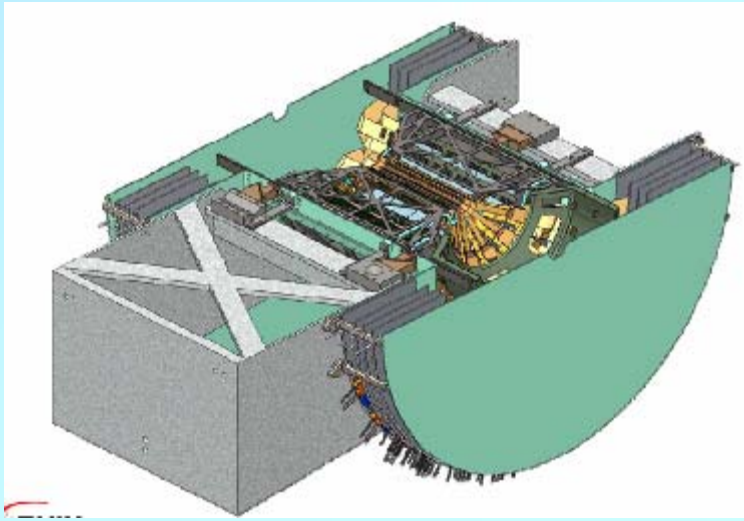

PHENIX

TECHNICAL SUPPORT 2010

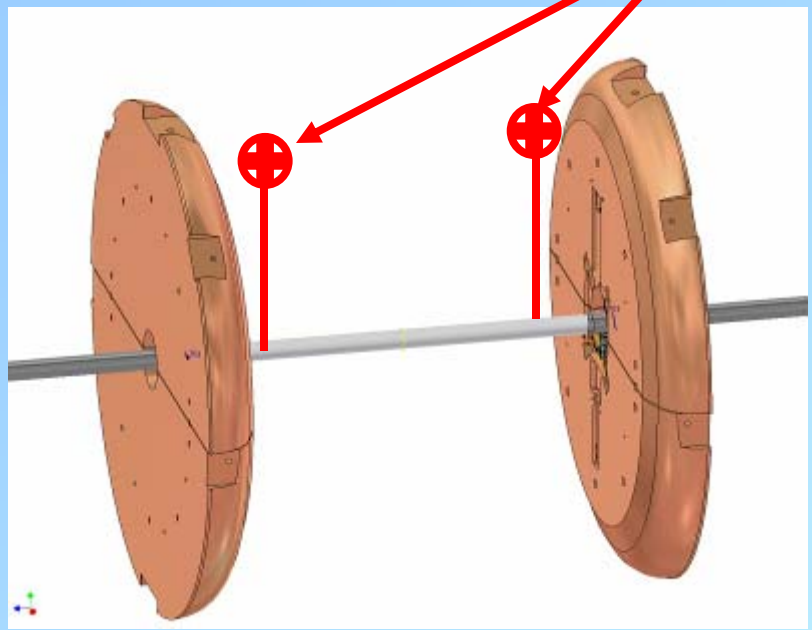

Survey Targets and fixtures TBD
Must be able to align BP to req'd radial and angular accuracy without VTX and with VTX in clamshells open configuration.

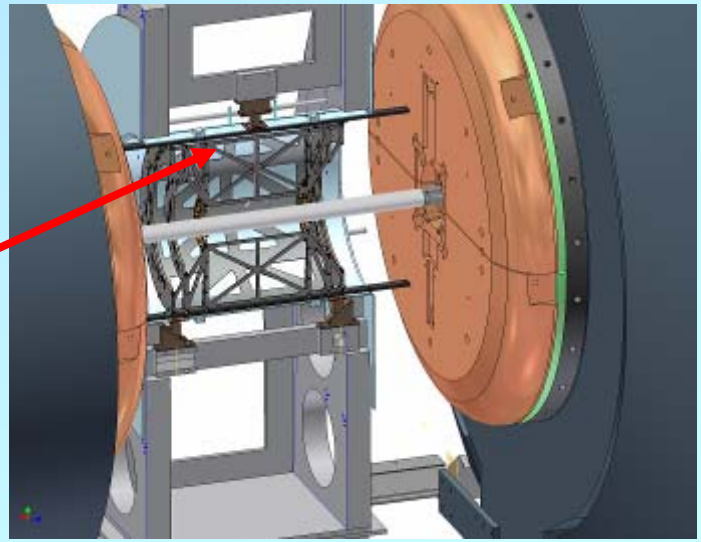

½ of VTX detector support structure

Bridge Electronics Concept

TECHNICAL SUPPORT 2010

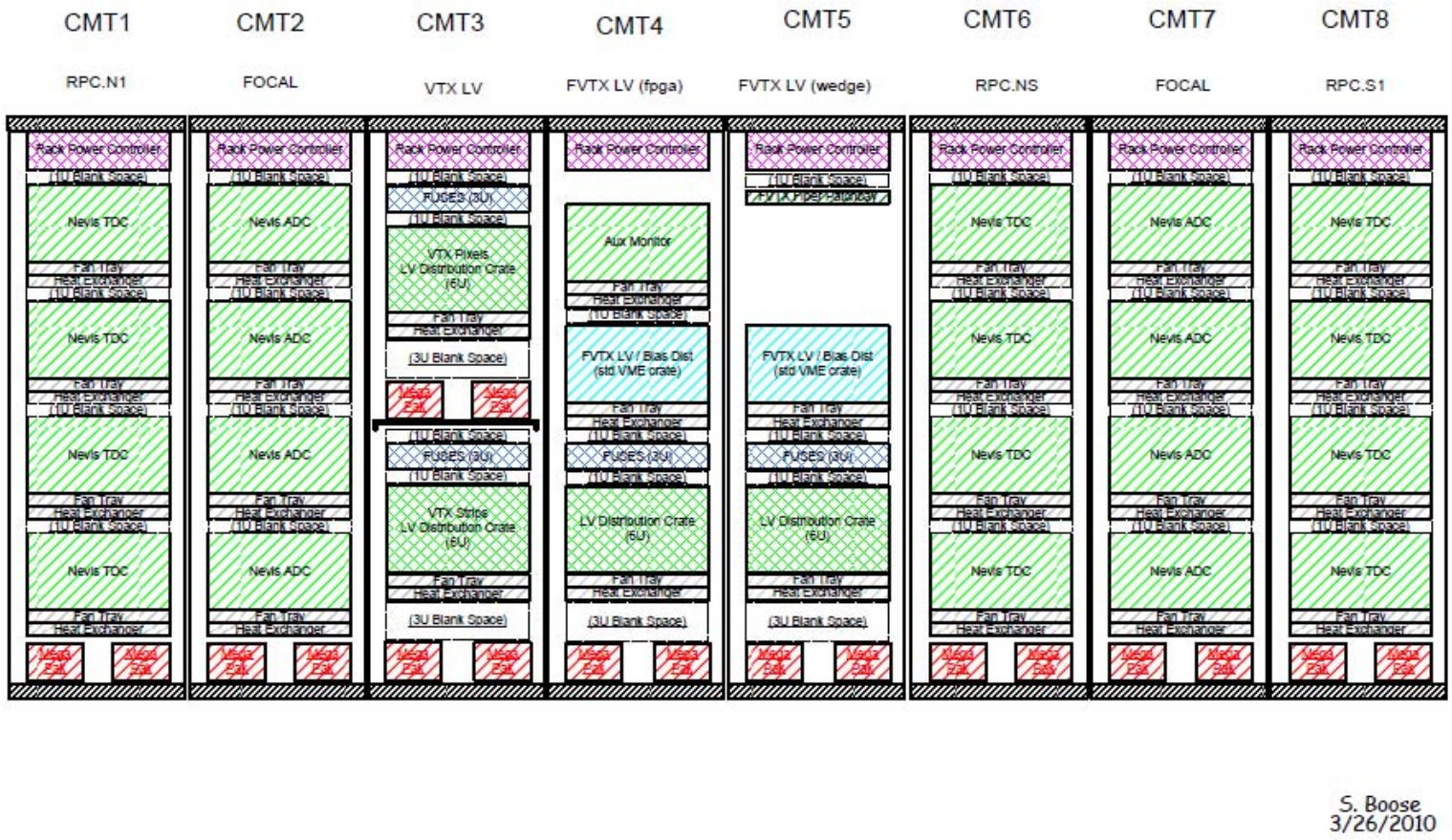

PHENIX

TECHNICAL SUPPORT 2010

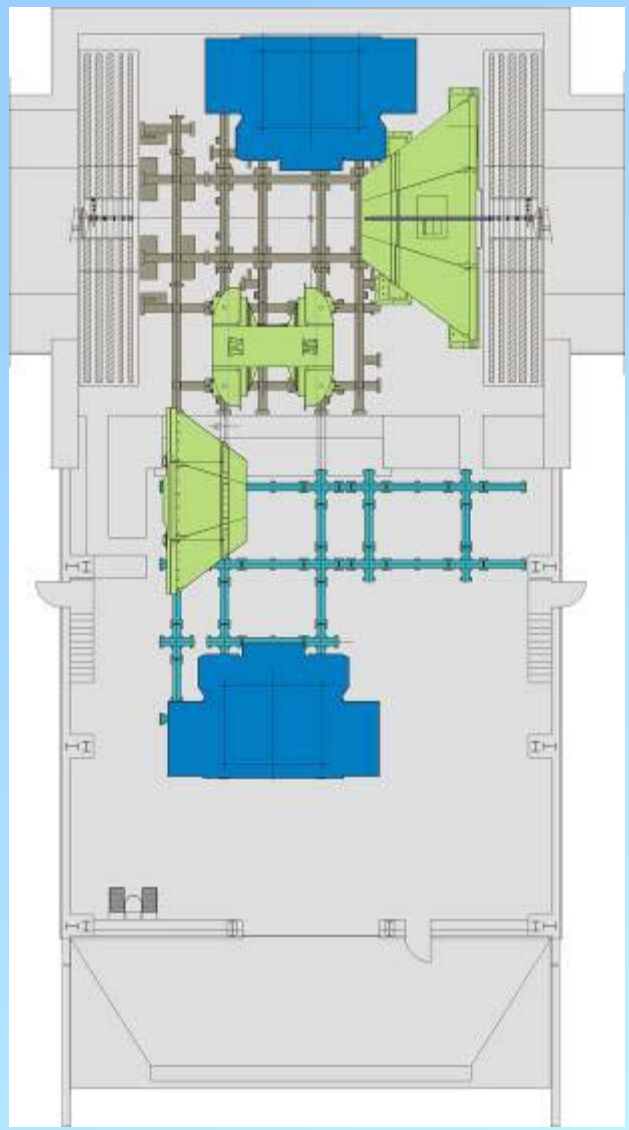

Major PHENIX Components during shutdown when Old beampipe is out and new beampipe is ready to go in. Approximately last week in July.

This is the optimal point for DC, MuTr Station 1, and/or RPC absorber work. Potential work in these areas is still under review by PM.

Note: Absorber installation to be done during this period. MuTr station 1 work shall be limited to work in situ (i.e. station 1 will not be removed). Similarly DC/PC1 work will be limited to work which can be accomplished with the DC in situ, although, if requested, it may be possible to translate the DC on its mounting rails to allow limited access to DC/PC1 electronics.

Shutdown 2010 – muTr FEE repairs

TECHNICAL SUPPORT 2010

FEE – one FEM in each station-1

- 11023, 11024 – south S1 Q3 C2 (top); may be glink/clink RX module
- 11197, 11198 – north S1 Q3 C4 (bottom east); probably controller

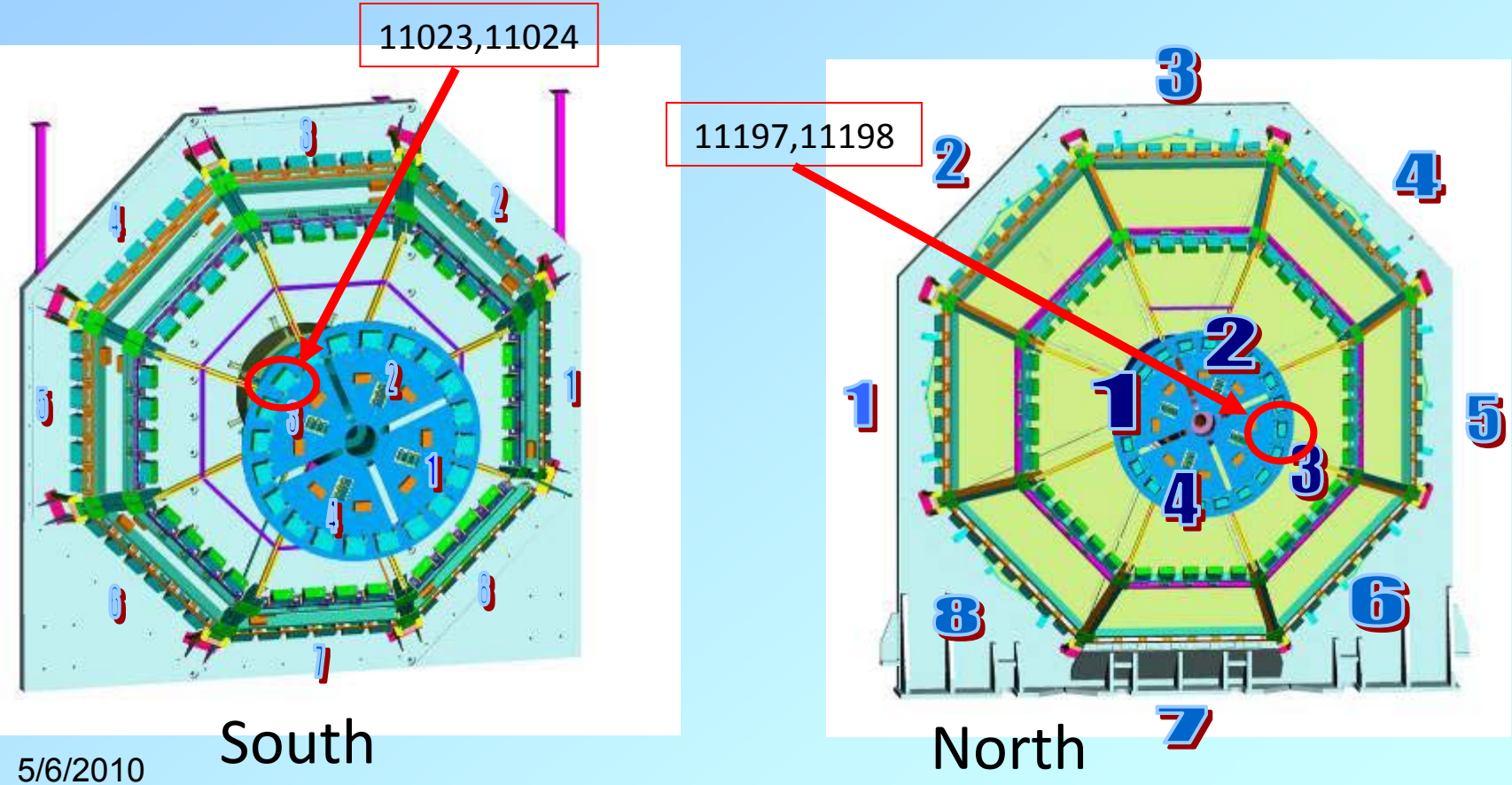

Shutdown 2010 – Calibration cable termination repairs

TECHNICAL SUPPORT 2010

Calibration cable connections – fix terminations

- north S1 – O2 G1; O3,4 G3; O6 G3; O8 G2 – all infinite termination now
- north S1 – O3,4 G1,2 – 57 ohms (rest all 105 ohms)
- north S2 – O5 G1 – ½ gain of all others (probably can't reach)

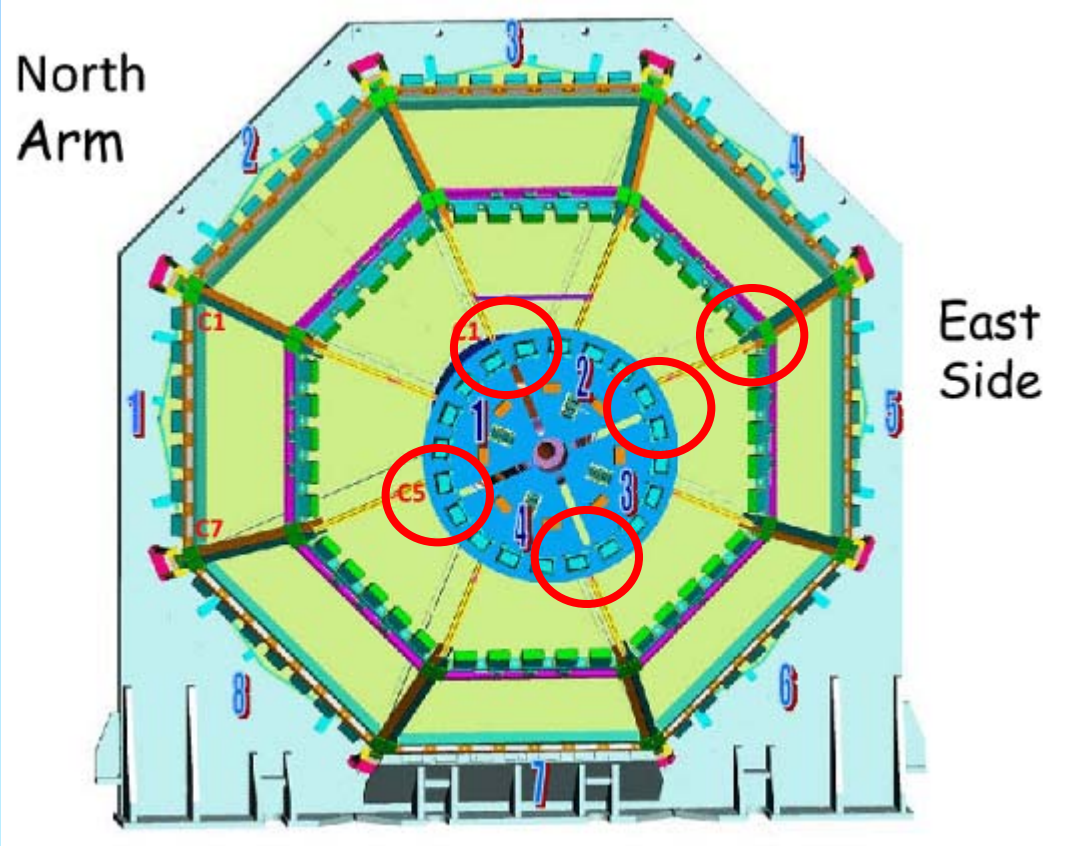

Shutdown 2010 – HV

- disabled but cannot be reached (S271-6, S311-0, S331-2, N222-6, N341-0)
- S381-5 high current – also can't be reached?

Nothing can be done w/o scaffolding

Apr 11 09:00:31 SOUTH MUON TRACKER HV SUMMARY

S111	S112	S113	S121	S122	S123	S131	S132	S133	S141	S142	S143
1885.5	1885.1	1885.0	1884.4	1885.4	1934.8	1936.0	1934.4	1885.4	1885.3	1885.3	1936.2
-.--	-.--	-.--	-.--	-.--	-.--	-.--	-.--	-.--	-.--	-.--	-.--
-.--	-.--	-.--	-.--	-.--	-.--	-.--	-.--	-.--	-.--	-.--	-.--
0.00	-0.02	0.01	0.03	0.01	0.11	-0.03	0.04	0.00	-0.01	0.03	0.04
-0.02	0.01	0.02	0.03	-0.01	0.08	-0.02	0.16	0.01	-0.01	0.02	0.01
0.02	0.05	0.01	0.02	-0.04	0.10	0.04	0.00	0.02	-0.02	0.02	0.00
0.01	0.01	0.00	0.02	0.01	0.09	0.00	0.01	-0.01	-0.02	0.06	-0.06
-0.01	-0.02	0.03	0.04	0.00	0.09	-0.01	0.00	-0.06	0.01	-0.01	-0.01
0.00	0.00	0.00	0.09	-0.06	0.08	0.00	0.05	0.00	0.00	0.00	-0.06

S151	S152	S153	S161	S162	S163	S171	S172	S173	S181	S182	S183
1886.9	1886.5	1885.1	1940.3	1935.6	1933.9	1885.1	1885.3	1936.0	1885.1	1885.0	1896.1
-.--	-.--	-.--	-.--	-.--	-.--	-.--	-.--	-.--	-.--	-.--	-.--
-.--	-.--	-.--	-.--	-.--	-.--	-.--	-.--	-.--	-.--	-.--	-.--
0.00	-0.01	0.01	0.08	0.03	0.00	-0.04	0.00	0.01	0.02	0.00	0.06
0.01	0.05	-0.01	0.15	0.10	0.02	-0.04	0.01	0.00	0.09	0.01	0.01
0.00	-0.01	0.00	0.08	0.10	0.00	0.01	0.00	0.00	0.03	0.01	-0.01
0.01	0.00	0.00	0.08	0.08	0.06	0.02	-0.02	0.00	-0.02	0.03	0.04
0.03	-0.03	-0.02	0.10	0.14	0.00	-0.01	0.01	0.00	0.02	0.02	0.00
0.09	-0.06	0.00	0.12	0.05	0.02	0.00	0.00	0.04	0.04	0.04	0.00

S211	S213	S222	S231	S233	S242	S251	S253	S262	S271	S273	S282
1959.2	1909.8	1911.6	1959.9	1960.5	1960.3	1910.2	1909.8	1961.0	1909.8	1911.2	1911.5
-0.03	-0.47	0.03	0.12	0.00	0.04	-0.03	-0.04	0.00	0.03	0.01	0.02
0.00	0.00	0.00	0.10	-0.01	0.05	-0.02	-0.01	0.03	0.02	0.03	0.07
0.01	-0.14	0.02	0.05	0.04	0.07	-0.01	0.01	-0.01	0.03	0.00	0.00
0.35	-0.11	0.00	0.06	0.04	0.06	0.02	0.00	-0.04	0.02	0.02	-0.01
0.01	-0.09	-0.01	0.03	0.08	0.01	0.01	-0.02	0.02	-0.01	-0.06	0.00
0.08	-0.06	-0.02	0.04	0.06	0.00	0.01	0.01	0.01	0.03	0.02	0.00
0.01	-0.09	0.00	0.02	0.03	0.00	0.00	0.00	0.01	0.00	-0.02	0.02
0.02	-0.03	-0.05	0.06	0.01	0.02	-0.02	0.00	0.00	-.--	0.00	0.04

S311	S321	S331	S341	S351	S361	S371	S381
1975.6	1954.3	1967.0	1934.0	1934.0	1935.2	1936.6	1935.3
-.--	0.01	0.01	0.03	-0.01	0.02	0.07	0.05
0.02	0.12	-0.02	0.11	-0.06	0.02	0.15	0.00
0.01	0.07	-.--	0.04	0.00	0.00	0.07	0.04
0.01	0.03	0.00	0.06	0.00	-0.07	0.11	0.05
0.02	0.01	-0.06	0.01	0.00	0.10	0.10	0.06
0.09	-0.03	0.08	0.05	0.06	0.06	0.11	16.16
0.00	-0.02	0.09	0.03	-0.02	0.01	0.07	0.04
0.15	-0.06	0.05	0.01	0.02	0.02	0.10	0.04

Mar 8 08:13:34 NORTH MUON TRACKER HV SUMMARY

N111	N112	N113	N121	N122	N123	N131	N132	N133	N141	N142	N143
1875.8	1875.2	1925.1	1876.1	1874.8	1876.2	1875.3	1894.9	1925.0	1875.2	1915.6	1926.4
-.--	-.--	-.--	-.--	-.--	-.--	-.--	-.--	-.--	-.--	-.--	-.--
-.--	-.--	-.--	-.--	-.--	-.--	-.--	-.--	-.--	-.--	-.--	-.--
0.53	0.49	0.55	0.53	0.53	0.53	0.50	0.54	0.57	0.51	0.57	0.58
0.53	0.54	0.57	0.58	0.55	0.51	0.51	0.57	0.56	0.54	0.58	0.58
0.56	0.51	0.59	0.55	0.54	0.54	0.55	0.55	0.61	0.50	0.57	0.60
0.56	0.51	0.58	0.53	0.52	0.49	0.47	0.56	0.54	0.54	0.52	0.53
0.48	0.54	0.53	0.52	0.58	0.53	0.52	0.52	0.53	0.50	0.57	0.56
0.54	0.49	0.53	0.53	0.49	0.50	0.50	0.53	0.59	0.48	0.52	0.51

N151	N152	N153	N161	N162	N163	N171	N172	N173	N181	N182	N183
1925.1	1925.3	1925.3	1884.4	1924.5	1926.4	1875.2	1875.3	1924.9	1874.0	1905.7	1926.1
-.--	-.--	-.--	-.--	-.--	-.--	-.--	-.--	-.--	-.--	-.--	-.--
-.--	-.--	-.--	-.--	-.--	-.--	-.--	-.--	-.--	-.--	-.--	-.--
0.55	0.58	0.55	0.50	0.56	0.58	0.50	0.50	0.53	1.13	0.56	0.55
0.60	0.60	0.54	0.54	0.58	0.55	0.53	0.50	0.54	1.12	0.55	0.54
0.56	0.63	0.53	0.59	0.78	0.54	0.51	0.48	0.55	1.16	0.51	0.58
0.52	0.60	0.62	0.51	0.47	0.54	0.53	0.51	0.54	1.12	0.56	0.54
0.53	0.50	0.56	0.52	0.52	0.54	0.53	0.47	0.55	1.09	0.51	0.55
0.50	0.48	0.51	0.54	0.53	0.55	0.54	0.48	0.54	1.09	0.50	0.52

N211	N213	N222	N231	N233	N242	N251	N253	N262	N271	N273	N282
1949.8	1950.6	1900.3	1939.9	1951.1	1899.8	1950.4	1939.2	1950.5	1900.4	1950.3	1901.2
0.56	0.54	0.53	0.57	0.54	0.49	0.57	0.52	0.53	0.49	0.53	0.51
0.58	0.63	0.54	0.59	0.56	0.58	0.73	0.62	0.54	0.61	0.60	0.56
0.56	0.58	0.52	0.58	0.56	0.55	0.58	0.51	0.49	0.50	0.55	0.52
0.53	0.53	0.52	0.55	0.53	0.51	0.51	0.49	0.51	0.51	0.52	0.49
0.58	0.53	0.49	0.55	0.53	0.51	0.59	0.43	0.52	0.52	0.58	0.52
0.62	0.57	0.57	0.60	0.78	0.51	0.55	0.51	0.67	0.53	0.62	0.55
0.61	0.52	-.--	0.59	0.57	0.54	0.65	0.55	0.51	0.52	0.57	0.51
0.53	0.52	0.47	0.52	0.54	0.50	0.53	0.47	0.52	0.54	0.58	0.48

N311	N321	N331	N341	N351	N361	N371	N381
1975.0	1924.4	1975.7	1926.0	1976.3	1975.4	1954.6	1925.3
1.06	0.84	0.87	-.--	1.20	0.64	0.57	0.57
1.49	0.85	1.08	0.59	1.24	0.61	0.58	0.64
1.28	0.91	1.05	0.70	1.30	0.63	0.66	0.60
1.18	0.88	1.19	0.71	1.35	0.57	0.57	0.61
1.26	0.82	1.18	0.51	1.23	0.54	0.58	0.48
1.23	0.89	1.13	0.73	1.32	0.74	0.66	0.62
1.09	0.91	1.00	0.59	1.38	0.65	0.60	0.53
1.30	0.89	1.19	0.62	1.35	0.65	0.59	0.58

Shutdown 2010 – Other

TECHNICAL SUPPORT 2010

muTrg, Itaru et al.
- south S3 O7 – threshold problem
- north S3 O1 – high noise (not reachable); S3 O4 – bad ADTX board

South arm disconnect/reconnect (fibers, power)
- lower glink/clink crates on top of eyebrow (to fit thru big IR door)
- move out/in; reconnect & test

Anode terminations
- station-1 gap-1 both arms – recap & terminate?
- station-2 all gaps, where we can reach w/o scaffolding (2 lower octants/arm) – terminate (under dry-air manifolds)?

PHENIX

TECHNICAL SUPPORT 2010

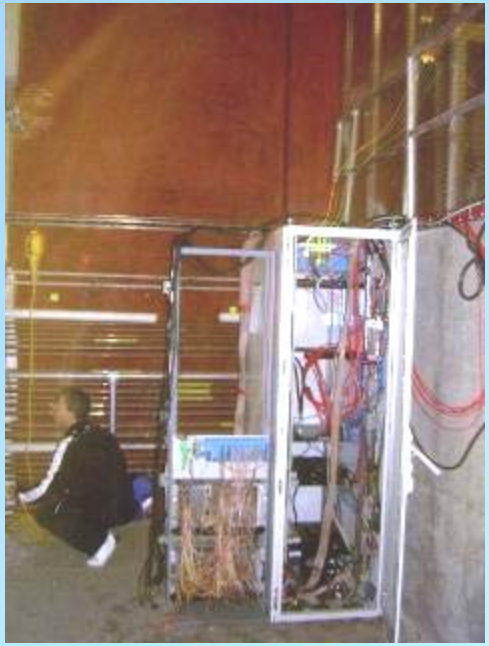

PHENIX

TECHNICAL SUPPORT 2010

New Beampipe Pre-Shutdown Prep

Task	Due By	NOTES
Bp and sections acceptance tests and inspection	Done	
Send BP transitions & spool to SAES for NEG Coating	5/7/2010	In Progress
Send beampipe to CERN for NEG Coating	5/15/2010?	
Fabricate beampipe supports	5/31/2010	In Progress
Design BP installation and survey tools/fixtures	5/31/2010	In Design queue
Memorial Day: Lab Holiday	5/31/2010	Enjoy the weekend
Choreograph removal of old beampipe and installation of new (final)	6/1/2010	In Progress
Test and inspect beampipe supports	6/15/2010	
Beampipe Installation Review (Final)	6/15/2010	
Receive bp back at BNL	7/31/2010	
Receive BP transitions & spool back at BNL from SAES after NEG Coating	7/31/2010	
Final acceptance and inspection bp and sections	8/6/2010	
Fabricate BP installation and survey tools/fixtures	8/6/2010	

PHENIX

TECHNICAL SUPPORT 2010

VTX Subassembly, Top Assembly, Installation and Integration Prep

Task	Due By	NOTES
Fabricate/prepare/procure assembly workspace, tools and fixtures	5/15/2010	In Progress
Mechanical re-design of BigWheels	5/15/2010	In Progress
Specify Cooling sensor & BigWheel system components	5/15/2010	In Progress
VTX Installation Plan	5/31/2010	
VTX Survey Plan	5/31/2010	Consult w/ F. Karl
Installation Review (ESRC)	5/31/2010	
Beampipe & VTX Installation Work Permits	5/31/2010	
Design fixtures, techniques and mockups for installation, alignment and survey	5/31/2010	
Memorial Day: Lab Holiday	5/31/2010	Enjoy the weekend
Specify components, assembly tools and fixtures, electronics for racks, cables, cable management etc.	6/15/2010	
BigWheel Fabrication & Procurement	7/15/2010	
Receive, inspect, test, rework and qualify components, assembly tools and fixtures, electronics for racks, cables, cable management etc.	7/15/2010	

PHENIX

TECHNICAL SUPPORT 2010

VTX Subassembly, Top Assembly, Installation and Integration Prep (cont'd)

Task	Due By	NOTES
Fabricate/procure detail components for installation, support and alignment, including station 1 work platforms	6/30/2010	
Fabricate fixtures, techniques and mockups for installation, alignment and survey	6/30/2010	
4th of July Holiday	7/5-7/6/2010	Enjoy the long weekend
Receive & inspect components (installation, support, alignment & Survey)	7/15/2010	
Assemble Hemisperes	7/15/2010	Probably will be delayed to the end of Aug
Mock installations/alignments, bench tests	7/31/2010	Probably will be delayed to the end of Aug
Cooling system procurement	8/31/2010	

RPC3 Pre Shutdown Prep

TECHNICAL SUPPORT 2010

Task	Due By	NOTES
Prepare Installation Plan	5/31/2010	In Progress
Design RPC Absorbers	5/31/2010	
Design Absorber Installation fixtures & tools	5/31/2010	
Fabricate PHENIX parts	5/31/2010	In Progress
Receive and inspect CS fabricated parts	5/31/2010	In Progress
Memorial Day: Lab Holiday	5/31/2010	Enjoy the weekend
Prepare work permit for installation	6/1/2010	
Receive purchased parts	6/4/2010	
Assemble, test and burn-in 1/2 octants	6/18/2010	
Pre-Assemble base components at PHENIX	6/18/2010	
Fabricate Absorber Details	7/31/2010	RPC Group and PHENIX
Fabricate/procure Absorber Installation fixtures & tools	7/31/2010	

PHENIX

TECHNICAL SUPPORT 2010

Start of Shutdown

Task	Due By	NOTES
DAQ Tests	6/4/2010	
Purge Gas From Detectors	6/8/2010	
EOR Party	6/11/2010	
End of Run 10	~6/14/2010	
Remove BP Collar	6/18/2010	As early as possible after 6/1
Move MMS south	6/18/2010	As early as possible after 6/1
Prep EC for move to EC	6/18/2010	As early as possible after 6/1
Close North and South BP gate valves and lock closed for until new BP is installed	6/18/2010	
Open and disassemble wall	6/18/2010	
Remove EC ladder and fold platforms	6/25/2010	
Move EC to AH	6/28/2010	
Install cart	6/28/2010	
Move Collars to AH	6/30/2010	
Install decking	6/30/2010	
Install Manlift	6/30/2010	
Remove RPC2 Prototype, support brackets, cabling & Piping	6/29/2010	
Remove MMS east vertical lampshade	6/30/2010	

Beampipe De-installation

TECHNICAL SUPPORT 2010

Task	Due By	NOTES
4th of July Holiday & Floating Holiday	7/5&7/6/2010	Enjoy
Remove HBD's and HBD cables Remove RXNP's and cables	7/9/2010	Concurrent with Start of shutdown tasks
Remove MPC's	7/16/2010	Concurrent w MPC's
Remove BBC's	7/16/2010	Concurrent with BBC's
Position MMS for Vacuum break	7/19/2010	
Install Temporary supports for old BP	7/19/2010	Supports TBD
Break vacuum on north side of MMS	7/19/2010	
Remove south bellows	7/19/2010	
Move MMS north, remove spool and south3-5 transition	7/20/2010	
Move the MMS south & Prep MMS for move to AH	7/23/2010	Begin MMS prep with shutdown start
Move CM south, remove north bellows	7/23/2010	
Move old Be bp south into MMS and move CM north	7/23/2010	
Move MMS to shutdown park position	7/23/2010	
Remove old Be BP	7/23/2010	
Move CM south and east	7/23/2010	
Remove north 3 to 5 transition	7/23/2010	

New Beampipe installation

PHENIX

TECHNICAL SUPPORT 2010

Task	Due By	NOTES
Prepare north 3 to 5 transition for installation with roller guides, bakeout wrap and thermocouples	7/23/2010	CAD
Prep CM North and South for Absorber and install	8/13/2010	(Install if absorber rec'd)
Install north 3 to 5 transition in MMN	8/13/2010	
Install new Be pipe in CM on temp supports	8/17/2010	
Move CM back to beamline & connect new Be BP to 1-5/8 transition and bellows and north 3-5 transition	8/17/2010	
Move CM to run position	8/18/2010	
Prealign Be/Alum pipe with transitions attached on new BP supports At MPC north, BBC south and north nosecone	8/19/2010	
Prepare south 3 to 5 transition for installation with roller guides, bakeout wrap and thermocouples	8/19/2010	
Install south 3 to 5 transition, bellows and 1-5/8 to 3" transition in MMS	8/20/2010	
Move MMS back into IR on beamline	8/20/2010	
Move CM south, slide Transition assembly in MMS north and connect to new Be BP	8/20/2010	
Move CM and MMS north and install south spool. Leak check. Move MMS South	8/27/2010	
Install temporary bakeout supports	8/27/2010	
Install bakeout blankets and monitoring	8/27/2010	
Labor Day Lab Holiday	9/6/2010	Enjoy
Bakeout New BP and activate NEG coating	9/10/2010	How Long?
Leak check BP	9/10/2010	
Re-install MPC's including Cables and services Re-install BBC's including Cables and services	9/24/2010	Concurrent efforts
Move CM to run position	9/24/2010	
Final alignment of new BP	10/1/2010	

VTX Installation, VTX Services and Electronics

PHENIX

TECHNICAL SUPPORT 2010

Task	Due By	NOTES
Install and align VTX rail attachment hardware to CM	10/1/2010	Install during bakeout?
Install and align VTX rails parallel to beam line	10/8/2010	
Install and align VTX rails perpendicular to beam line	10/8/2010	
Install and align west half detector module	10/15/2010	
Install and align east half detector module	10/22/2010	
Install mechanical support structures for VTX services and electronics	10/29/2010	Concurrent Effort
Install Cable trays	10/29/2010	|
Install racks	10/29/2010	|
Install chiller	10/29/2010	|
Install cables, plumbing	10/29/2010	|
Connect cables and plumbing	10/29/2010	V
Thanksgiving and Black Friday Holiday	11/25 & 11/26/2010	Enjoy
Test and commission	12/1/2010	

RPC3 South Prep, Early Shutdown

PHENIX

TECHNICAL SUPPORT 2010

Task	Due By	NOTES
Remove wiring, walkovers, FCAL and scintillator hardware that would otherwise interfere with installation	7/2/2010	PHENIX
4th of July Holiday	7/5 & 7/6/2010	Enjoy
Remove/relocate shielding	7/9/2010	Riggers
Remove crystal palace & vapor barrier	7/16/2010	CAD
Inspect Gap 5 south for legacy items/problems	7/23/2010	
Address legacy items/problems as convenient prior to shutdown start	7/30/2010	
Install lighting & relocate sensors as necessary	8/6/2010	Electrrician
Temporarily relocate, re-position or otherwise address interfering piping, cable trays	8/20/2010	PHENIX (w/ CAD Help?), Electrician
Remove RPC prototype	8/20/2010	
Pre-survey $\frac{1}{2}$ octant reference points	8/27/2010	Surveyors
Drill and tap $\frac{1}{2}$ octant and rotating piston mounting points	8/31/2010	
Build/install access and work platforms for walk on top of MuID steel including stairs from MMS eyebrow	8/31/2010	Carpenters
Final cleaning and prep of gap 5 for grouting	9/3/2010	
Labor Day Lab Holiday	9/6/2010	Enjoy
Pre-installation orientation meeting with masons and riggers	9/7/2010	
Position lifting equipment in tunnel	9/10/2010	Riggers
Move east and west base structures into south tunnel and assemble on east and west sides of pedestal respectively. Include translation control fixtures	9/10/2010	Riggers & PHENIX techs

RPC3 South Installation

PHENIX

TECHNICAL SUPPORT 2010

Task	Due By	NOTES
Install and align base structures on east and west sides of gap 5	9/14/2010	
Prepare for grouting	9/15/2010	
Install grout	9/16/2010	
Install pitch control rails on pedestal and gap 5 east & west inner walls	9/17/2010	
Install upper suspension support hardware	9/17/2010	
Install ½ octants, 2 at a time in accordance with work plan/work permit		
Transport ½ octants 2 at a time from RPC factory to south tunnel on angled transport carts		
Transfer ½ octants from angled transport carts one at a time to temporary free standing and re-orienting roller fixture (fore and aft wheels and axel)		
Lift (and re-orient if appropriate) ½ octant and install into base structure, previously installed ½ octant or upper suspension hardawre as appropriate per work plan		
Pre-align each ½ octant as installed		
Perform electrical integrity tests before proceeding to next pair of ½ octants		
After all ½ octants are in place and tested, join east and west halves of full south station 3 detector and align to survey markers	10/15/2010	Riggers & PHENIX Techs

PHENIX

RPC3 South Integration

TECHNICAL SUPPORT 2010

Task	Due By	NOTES
Final survey	10/22/2010	Surveyors
Install new cable trays and piping supports	10/29/2010	Electrician, earlier if possible
Re-install MuID wiring and pipes	11/5/2010	
Install south thermal/vapor barrier	11/19/2010	CAD
Thanksgiving and Black Friday Holiday	11/25 & 11/26/2010	Enjoy
Re-install MuID gas rack	11/30/2010	
Commissioning and final acceptance tests	11/30/2010	RPC Group
Install RPC3 HV, LV and signal wiring and gas lines	11/30/2010	
Install RPC3 South gas distribution rack	11/30/2010	
Re-install shielding	11/30/2010	Riggers
Install RPC3 South environmental controls (heaters and thermostats)	11/30/2010	Electrician

PHENIX

Shutdown 2010 Other Work

TECHNICAL SUPPORT 2010

Task support	Due By	NOTES
RPC3 North unfinished business	7/15/2010	Electronics and cabling, grounding issues, environmental controls
MuTrigger FEE unfinished business	7/15/2010	MMS cable trays,
RHIC Summer Sunday Tour	8/15/2010	During bakeout
DC/PC maintenance/repair	11/15/2010	FEM and wire troubleshooting and repairs, major efforts will require longer shutdon
Thanksgiving and Black Friday Holiday	11/25 & 11/26/2010	Enjoy
PHENIX Survey Review	11/30/2010	
Procedure Updating	11/30/2010	
FVTX support	11/30/2010	As required
FoCal	11/30/2010	As required
Gas Mixing House maintenance & Repair	11/30/2010	
PHENIX Infrastructure maintenance, repair, upgrade	11/30/2010	TBD
Gas Pad expansion completion (grouting)	11/30/2010	
Gas Pad: new gas storage details	11/30/2010	
Gas Pad: New Ar Dewar	11/30/2010	
Gas Pad services new dewar support, maintenance and improvements	11/30/2010	

PHENIX

TECHNICAL SUPPORT 2010

Shutdown 2010 Other Work (Cont'd)

Task support	Due By	NOTES
AH Flood prevention improvements	11/30/2010	
IR Bridge Electrical service upgrade	11/30/2010	Support for 4 full racks in 2010, 4 more (8 total) in future
RPC Factory Support	11/30/2010	
Rack Room upgrade	11/30/2010	TBD
PHENIX Design Documentation	11/30/2010	
CM Crane	11/30/2010	
CM alignment stops	11/30/2010	TBD
Gas System maintenance, repair, upgrade	11/30/2010	
Other subsystem maintenance, repair/upgrade	11/30/2010	TBD
Future upgrade support	11/30/2010	RPC1, RPC absorbers, FVTX, FOcal, other TBD
Prepare for Run 11	11/30/2010	Normal end of shutdown tasks, typically taking 3-4 weeks
Run 11 Start	12/1/2010	
End of Shutdown Party	~12/3/2010	

2009 Building Maintenance Issues

TECHNICAL SUPPORT 2010

- Roof leaks in utility bathroom at northwest corner behind tech offices, over door between rack room and assembly hall and over door between control room and elect. ass'y room.

- General maintenance for Trailer Offices (in progress)
- Trailer Office Modifications planning in progress (new exterior siding?)

- New roof leaks in laser room and IR (southeast corner)
- Flooding in AH/ Driveway heaving [Lake PHENIX]

PHENIX

TECHNICAL SUPPORT 2010

PHENIX Procedure Review Current Status:

147 Procedures Identified

84 Made Inactive (not currently in use, will require revision to re- activate if and when necessary, available for reference purposes)

10 CAD procedures relevant to PHENIX, all are current and up-to- date. (CAD web access to these documents is not up to date)

42 PHENIX approved procedures.

1 is currently under review
41 are current and up-to-date

11 Proposed/Draft Procedures (never previously formalized)

Web retrieval of latest procedures now available from PHENIX Internal:

http://www.phenix.bnl.gov/WWW/INTEGRATION/ME&Integration/DRL_procedures.htm

Nothing new to report this week.

New Argon Dewar and Empty Gas Bottle Storage Area

PHENIX

TECHNICAL SUPPORT 2010

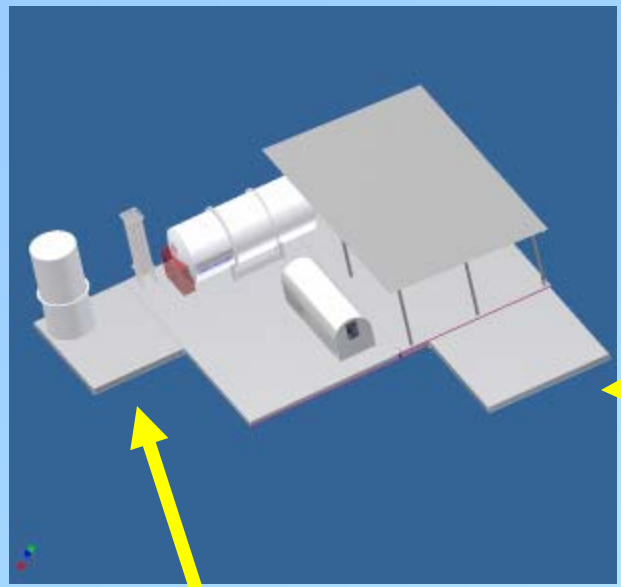

Pad for Empty Gas Bottles

Pad for argon Dewar

PO for material to fill cracks is in progress. PO for Ar Dewar installation and rental is in progress

PHENIX

TECHNICAL SUPPORT 2010

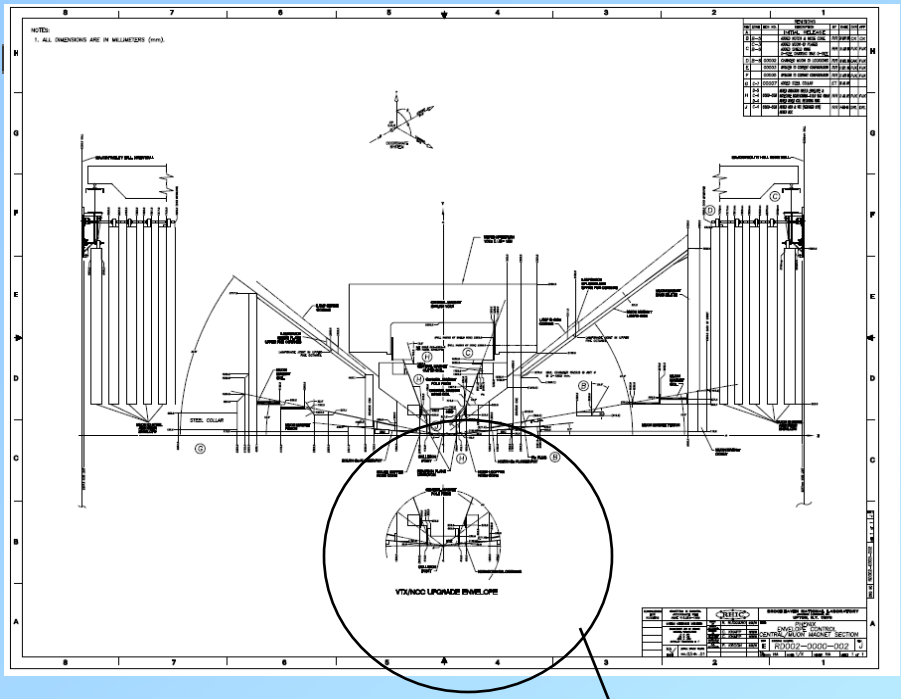

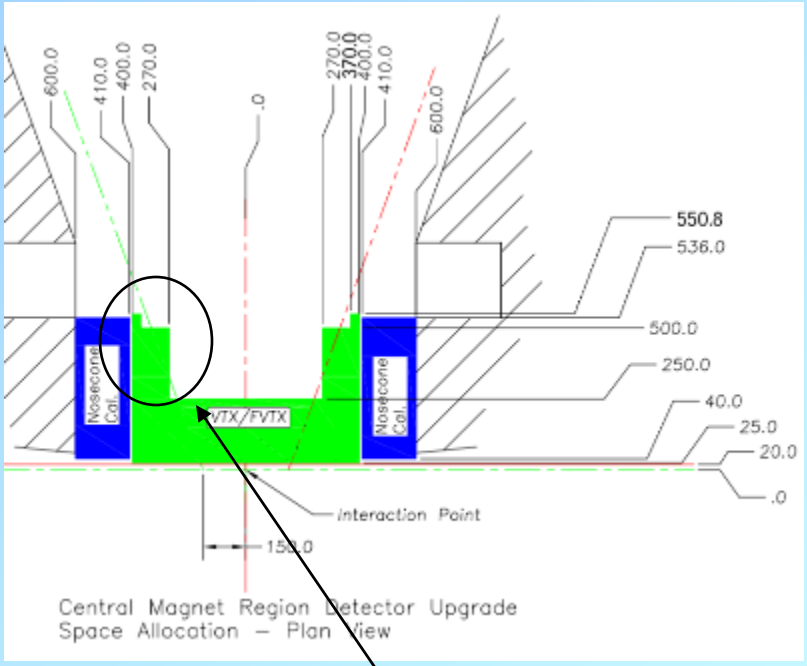

Requested Change from FVTX group

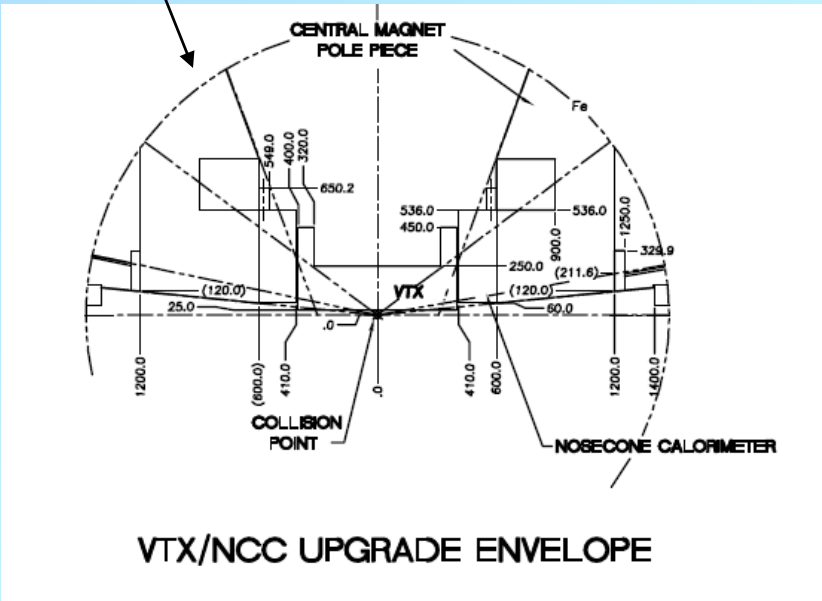

PHENIX

TECHNICAL SUPPORT 2010

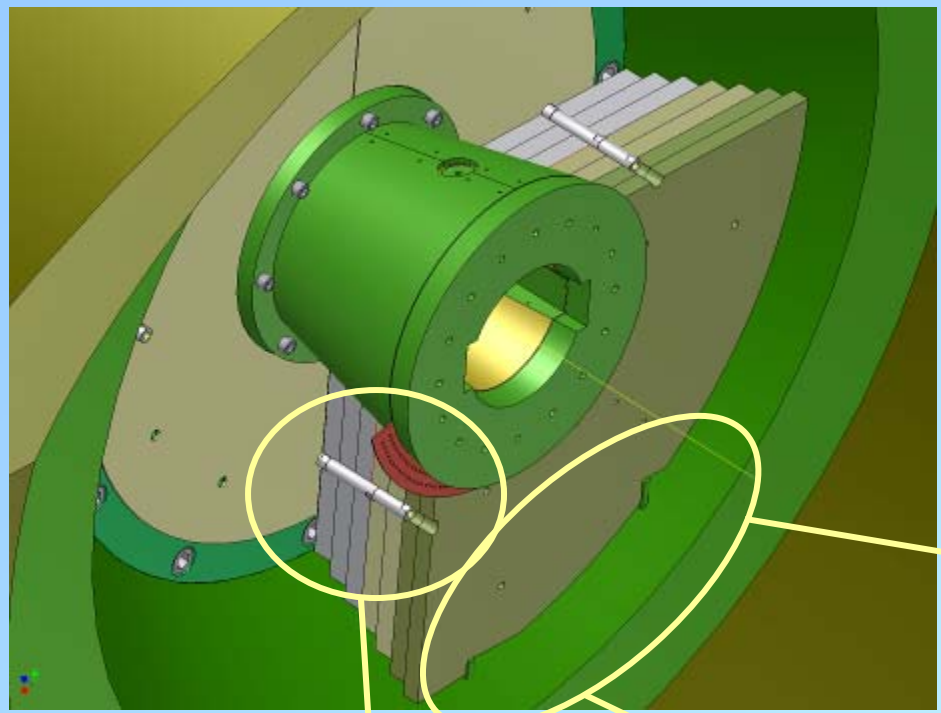

RPC Absorber Final Design

- Welded & tapped vertical support bossess
- 3 stage positioning rod

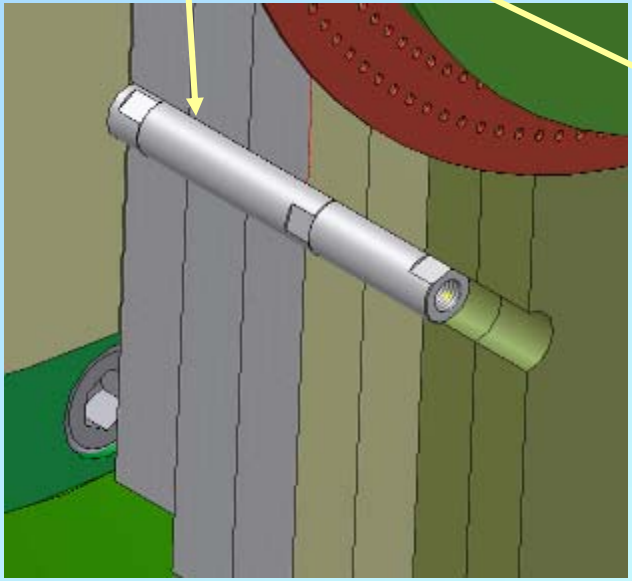

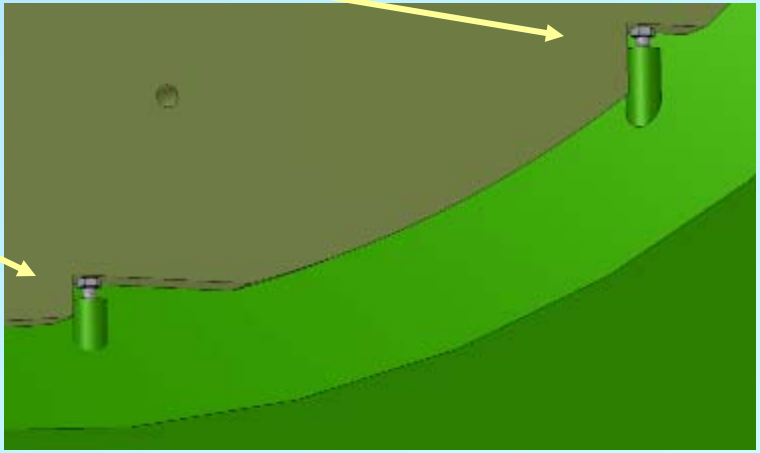

PHENIX

TECHNICAL SUPPORT 2010

Safety, Security, etc.

1. Training Report sent out: mostly up to date check your curent status for JTA's and required training.

2. "Hurry up and get hurt". Major root cause of injuries is when hazard was not recognized and controls were not planned. While we want to be efficient, timely and productive, it is always better to take a moment to reflect on the task at hand rather than move ahead with blinders on.

3. From John Maraviglia: all who use aerial lift please note the following requirements: (Carter, Jimmy, Kenny, John T., Rob, Frank, Mike R. & Mike L. are all up to date. Chris and Sal ?)

   All of the following must be met for Aerial Lift Operators:

   1) Complete Aerial Lift Classroom Training (TQ-AERIAL-C).
   2) Complete Fall Protection Classroom Training (GE-FALLPROTECT).
   3) Complete Aerial Lift "Practical" (TQ-AERIAL-P). The attached form is used to conduct the Practical.
   4) Supervisors must indicate 'working at heights' on the employees Job Assessment Form JAF) that is submitted to the BNL Clinic.
   5) All who operate an aerial lift should be linked to Training JTA Code GE-80.
   6) Items 1 and 2 MUST be completed before item 3; the Practical. They are pre-requisites.

Rack Room Gutter Cleaning

- Soon we are replacing the main Event Builder Switch with our new flagship switch.
- Means a lot of cable pulling in the “Event Builder Aisle”
- In particular the cable tray on top of the rack has a lot of sediments which would benefit from a start from scratch

This is how it looks

- The Event Builder Aisle
- This is the tray I'm talking about

The future Switch

Standard Gigabit ports

"MRJ-20" cable bundles with 6 Gig ports each go to patch panels (or directly to the machines) May make our cable distribution easier, bring a few bundles to the racks

10GbE ports

Standard fibers with "SFP+" connectors

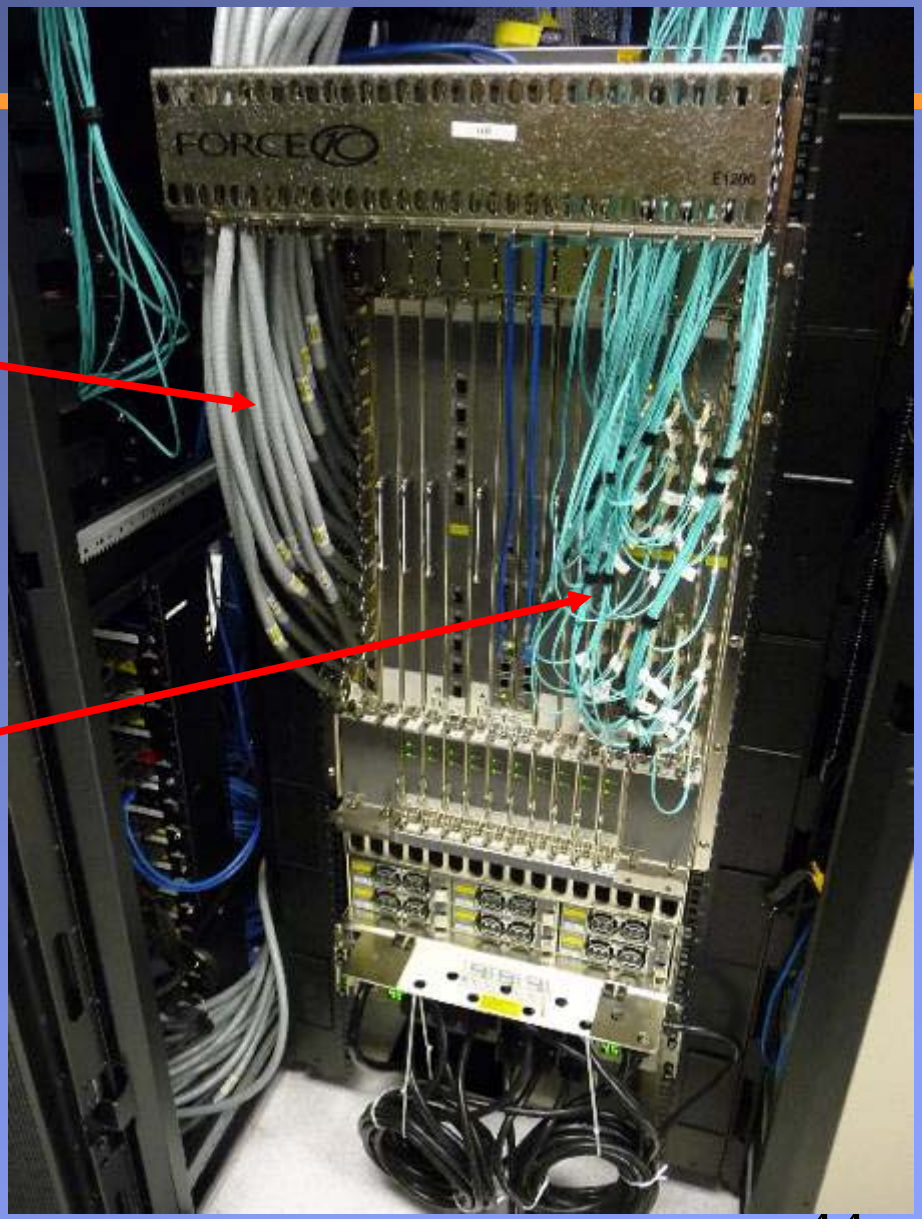

The Task

- We'll rig up a few alternate connections to the first two racks to keep them alive (I do that)
- We disconnect all network cables (about 150 or so) and pull them out, roll them up without tangling them up, remove labels
- More than 100 are local to the rack row, about 50 go somewhere else
- There are fibers mixed in, they have to go out first
- Not by count but by bulk the KVM cables are the biggest, they stay, but it looks like many of them are on top
- From above this doesn't look like much, but on the ground it looks like a big deal

Timeline

- When our run ends, we can get going (early June)
- Find some room to coil up the pulled cables
- Devise a good labelling scheme for the future
- Then think about putting the new stuff in
- 2 weeks? Reasonable?

Tray from above and below

- KVM Cables

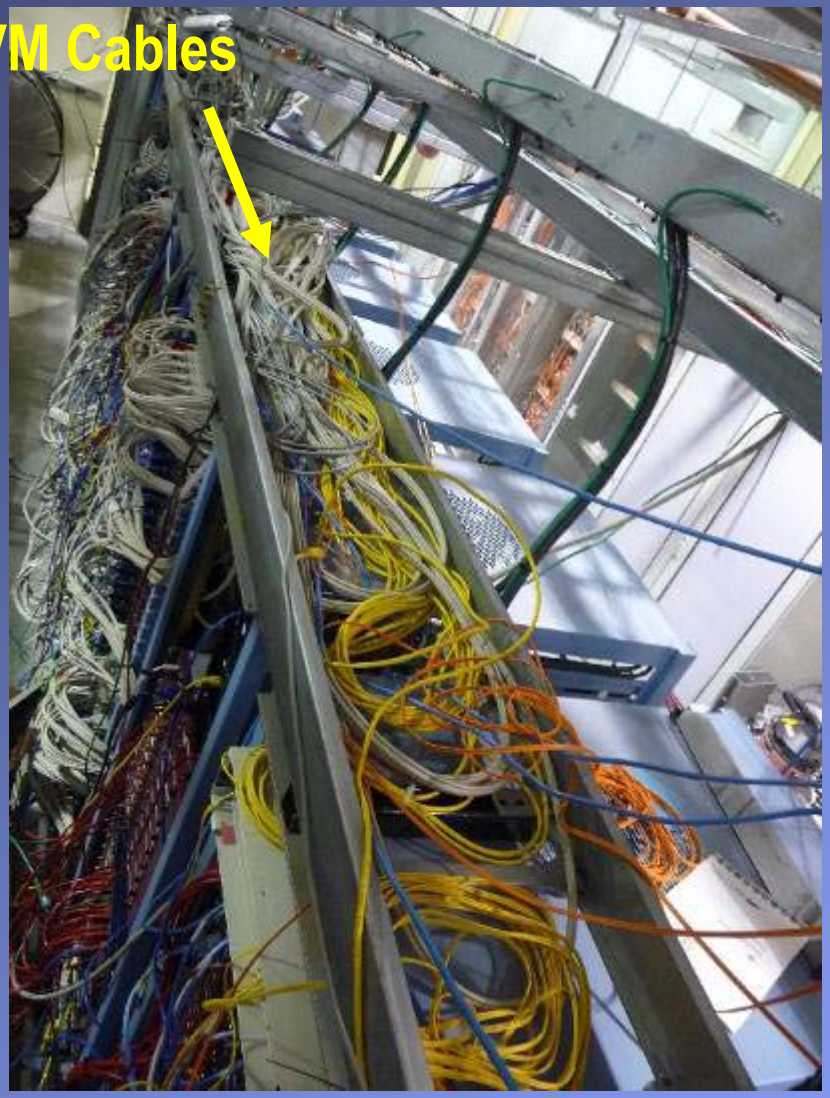

- Current Switch
- This goes away

Lots of ad-hoc cabling

Where To Find PHENIX Engineering Info

TECHNICAL SUPPORT 2010

Sunday is Mother's Day

Don't Forget Your Mom !

Links for the weekly planning meeting slides, archives of past meeting slides,long term planning, pictures, videos and other technical info can be found on the PHENIX Engineering web site:

http://www.phenix.bnl.gov/WWW/INTEGRATION/ME&Integration/DRL_SSint-page.htm