Gas System
Software Manual

Brookhaven National Laboratory

By Peter Kravtsov (E-mail: PAKravtsov@lbl.gov)
This document location: http://www-rnc.lbl.gov/~pkravt/pdf/phenix_soft.pdf

May 2000

Introduction

The software described in this document was developed for each of the TEC/TRD and DC/PC gas systems. The differences between these two programs are negligible, therefore we will consider TEC/TRD gas system software in this document. It provides manual control of the gas system, data acquisition, shows measured system parameters and maintains gas system database. Besides, the software reacts on some gas system faults and takes care for automatic recovering.

The gas system software consists of two on-line processes: main process, which does the most job, and DBWriter, which maintains database. In addition, third application – DBViewer [4], can be used to visualize gas system parameters from database or export the data to text files for further analysis. The database used for gas system data is MS Access 97 database, which requires Data Access Objects (DAO3.5) be installed on computer for normal work of DBWriter and DBViewer [4]. Data Access Objects are included in MS Office 97 installation. The main process logs every event into text file (may be changed to Windows NT application event log in future).

The main control process contains two threads. The first one provides graphical user interface (GUI) and events log, while the second thread does data acquisition, device control and alarms handling. The priority of the second thread is set to highest value for reliable work in crowded system.

Main Process

The main process of gas system software gives user a possibility to control gas system manually (Fig. 1). The buttons on the gas scheme represent every solenoid valve and device controlled by software. Red button state means either closed valve or switched off device, while green one stays for open valve or switched on device. Note that some solenoid valves and devices are controlled by the Alarm System (see Alarm System Manual [3] for details) and the pressure switch therefore they may block software control. The gas scheme at the main window is simplified [2,3].

All the sensors being read by software are displayed at right side of the window. There is a possibility to see sensor's voltages, which can be

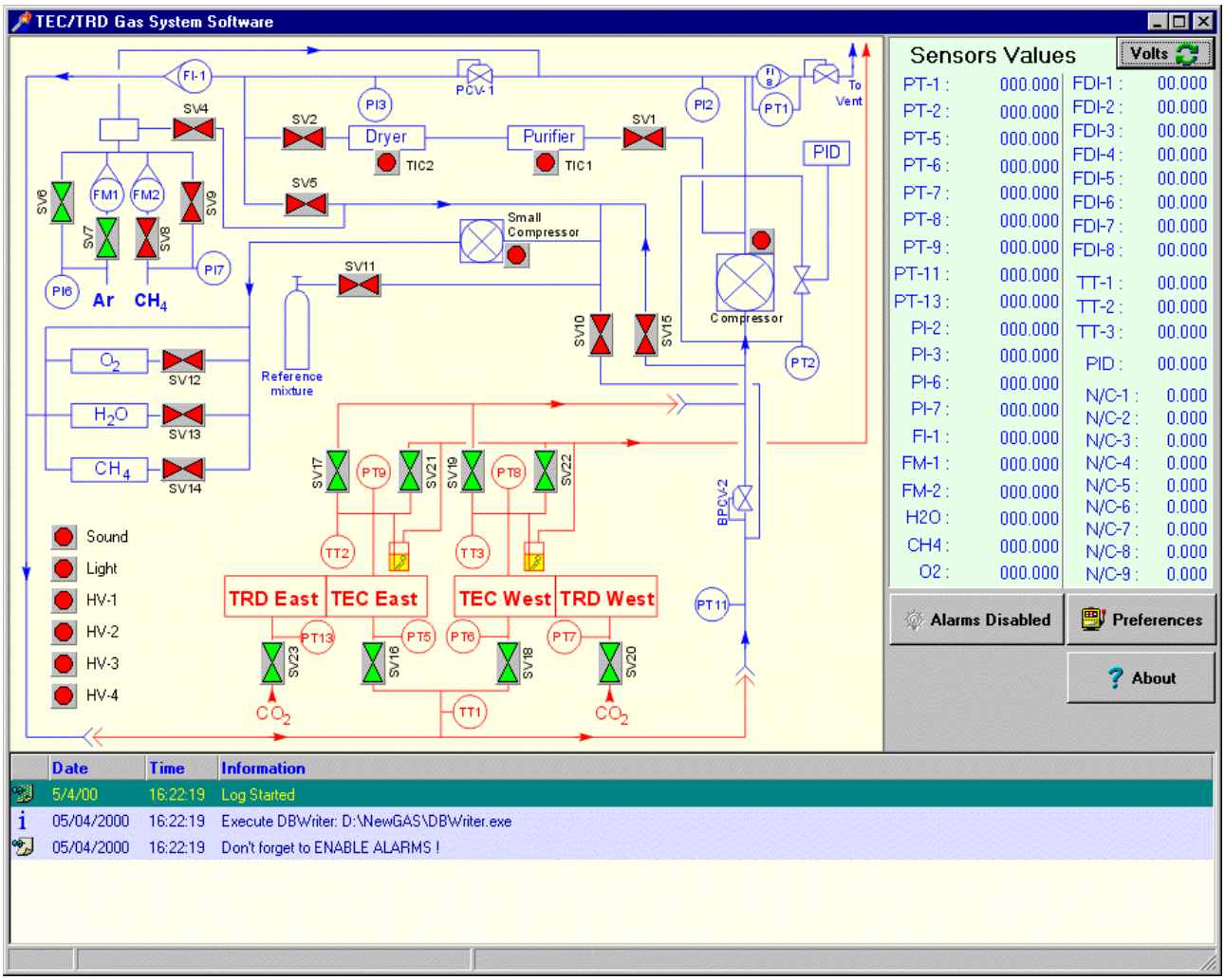

Fig. 1. Manual control of gas system.

useful for coefficients calculation. The buttons beneath sensors list are used to enable or disable alarms and open preferences window. Note that all alarms are disabled by default at program start. Each software event is logged into list at the bottom of window and into text log file as well. Event log at this window is capable to keep up to 200 lines. Text file is tab-delimited and it's easy to analyze it in MS Excel. When the program starts, it executes DBWriter automatically.

The Preferences dialog window contains two tabs: Analog inputs configuration and Alarms configuration. First tabsheet (Fig. 2) allows one to adjust translation coefficients for each sensor, it's name and physical units. Voltage is converted to physical value using the formula: $S = (V - KA) \cdot KB$, where V is voltage, S – physical value. The sensors configuration list can be saved to registry ([OK/Save] button), to binary file ([Save to file] button), loaded from binary file with [Load from file] button and exported to tab-

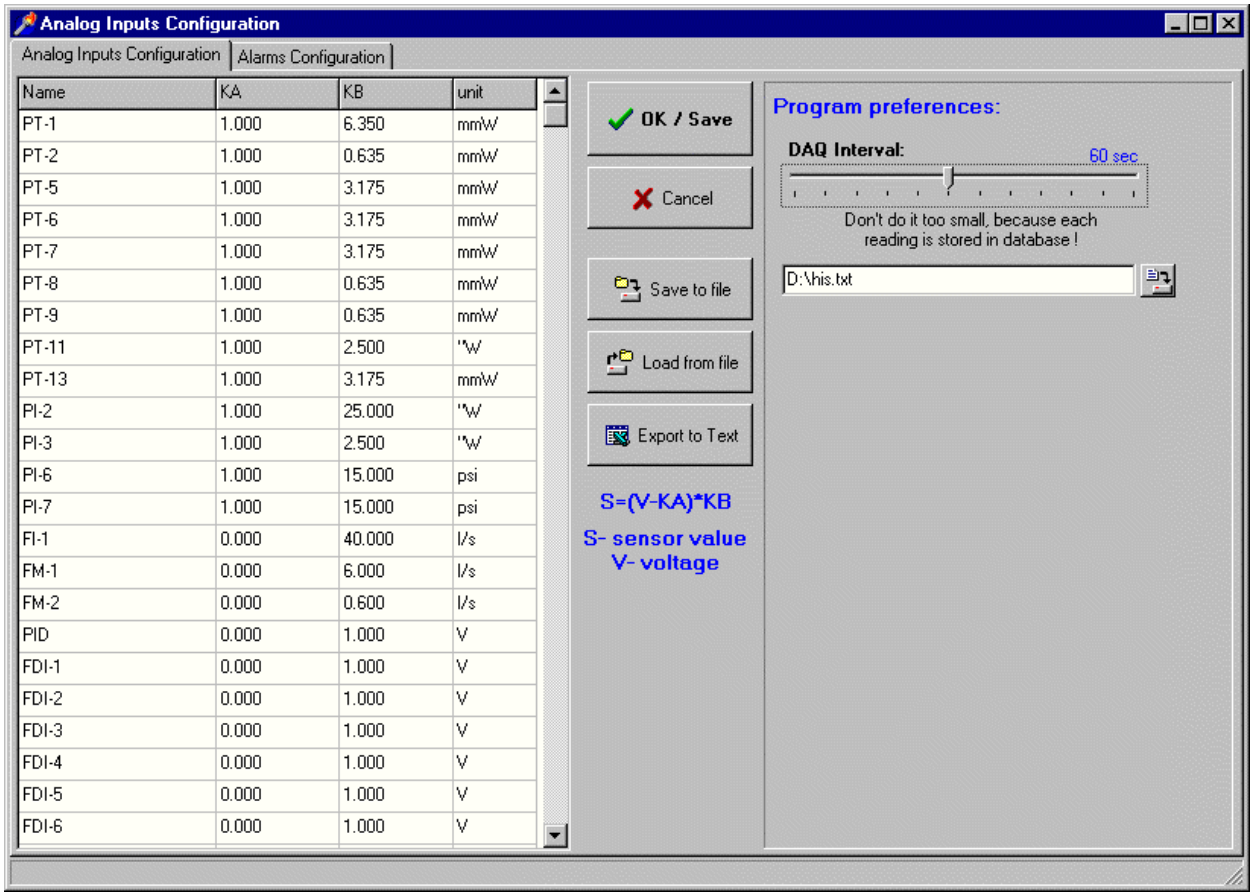

Fig. 2. Analog inputs configuration window.

delimited text file ([Export to Text] button).

There is also trackbar for changing DAQ interval, i.e. interval between reading of all sensors. User has not to do it too small, because it increases number of database records, seeing each reading is stored in database. History file location resides underneath DAQ interval trackbar. All these parameters are saved into registry by [Ok/Save] button and restored at program startup.

The Alarms configuration tabsheet (Fig. 3) is designed to display and change alarms levels and actions to be taken in case of any particular alarm. For every alarm one can change:

- Alarm name
- Active sensor for this alarm
- Alarm level (sensor value exceeding level causes alarm)
- Alarm return level (sensor value below this level recovers system from

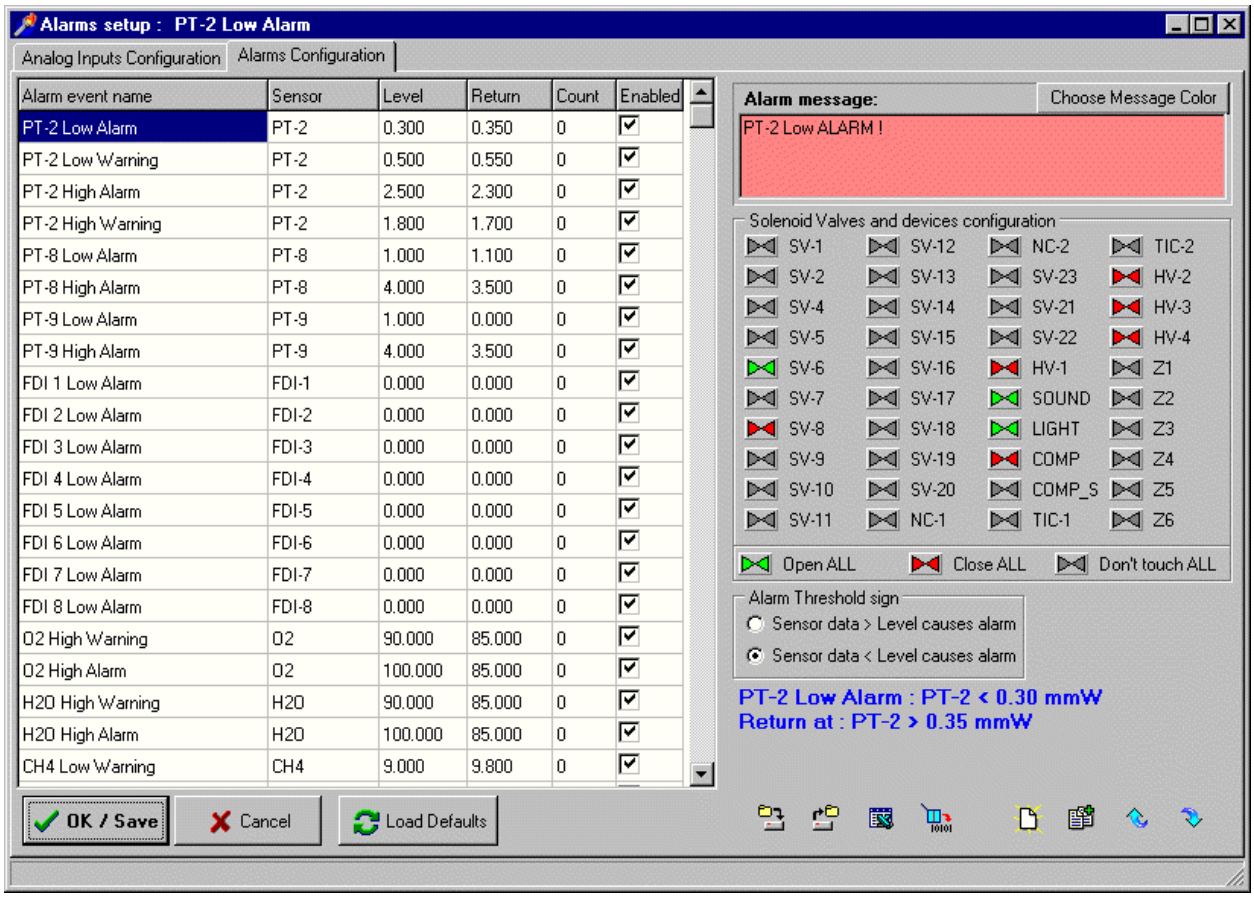

Fig. 3. Alarms configuration window.

alarm, once it has been triggered)

- Threshold sign (sensor value comparison sign)
- Count (number of exceeded sensor values for alarm) [*not used yet*]
- Enabled (allows enable or disable each alarm)
- Alarm message, which will be logged in case of alarm
- Alarm message color
- Valves configuration

Alarms handling algorithm is almost the same like in Alarm System (see Alarm System Manual [3] for details). After each measuring cycle, DAQ thread compares alarm thresholds for all enabled alarms with appropriate sensor values using alarm comparison signs. If sensor value exceeds the alarm level, it displays alarm message and updates valves accordingly alarm valves configuration (red valves will be closed, green will be open, while gray will be left intact), storing list of affected valves in memory. Upon alarm recovery event, i.e. if sensor value returns to alarm return level, the code changes only those valves, which were not alarmed by the other sensors, making use of the stored list of the changed outputs.

Note that instead of special **default state** used in Alarm System, PC software uses **current valves state** at every alarms checking cycle. This means that no valves and devices are affected if nothing happens with alarm situation, i.e. neither alarms nor alarm returns happened.

Alarms configuration is stored in registry. There are two copies of alarms setup: normal and defaults. Normal setup is used each time the program starts, while defaults intended to be used as a reference. The buttons at the window's bottom allows to perform service tasks:

– Save alarms configuration to binary file

– Load alarms configuration from binary file

– Export alarms configuration to tab-delimited text file

– Export alarms configuration to MS Excel file (takes about 2 minutes!)

– Save alarms configuration to registry as defaults

– Add new alarm to bottom of alarms list

– Copy current alarm to a new one at the bottom of the list

– Move current alarm up (just for aesthetic purposes)

– Move current alarm down (just for aesthetic purposes)

If user changed either alarms or analog inputs configuration and wants to switch to other tabsheet, he will be asked about saving changes (Fig. 4).

Fig. 4. Confirmation dialog.
[Yes] saves changes, [No] discards them,
[Cancel] returns to editor.

DBWriter

The DBWriter window (Fig. 5) is usually minimized and resides in system tray. It has it's own log, which is not saved to text file. Actually the DBWriter window is used only for solving problems with data recording to database or for changing database. One can create a new database in DBWriter. It is recommended to change database sometimes, because huge amount of data makes it difficult to search and select data. For example, the same database in STAR experiment has about 200,000 records for three and a half months and takes about 50Mb. Therefore it seems to be wise to start a new database every 3-5 months.

See DBViewer Manual [4] for information about data analysis and processing.

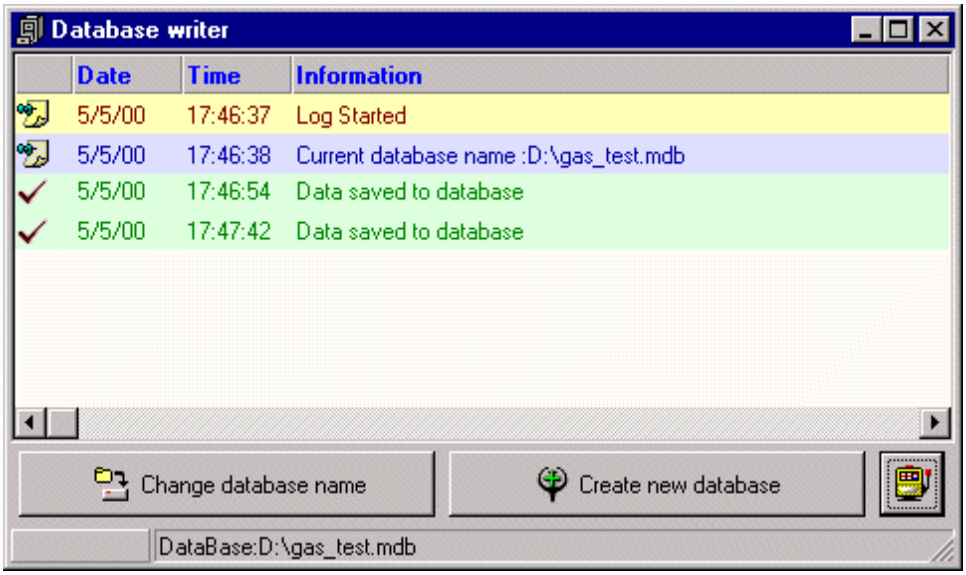

Fig. 5. DBWriter window.

References

1. TEC/TRD Gas System scheme.
2. DC/PC Gas System scheme.
3. Alarm System Manual: http://www-rnc.lbl.gov/~pkravt/pdf/alarm_manual.pdf
4. DBViewer Manual: http://www-rnc.lbl.gov/~pkravt/pdf/DBViewer.pdf