The Calorimeter Systems for the sPHENIX Experiment at RHIC

C Woody and E Kistenev, for the PHENIX Collaboration

Physics Department, Building 510C
Brookhaven National Lab
Upton, NY 11973

E-mail: woody@bnl.gov, kistenev@bnl.gov

Abstract. A major upgrade is being planned for the PHENIX experiment that will have greatly enhanced physics capabilities to measure jets in relativistic heavy ion collisions at RHIC, as well as in polarized proton interactions, and eventually electron ion collisions at an Electron Ion Collider. This upgrade, sPHENIX, will include two new calorimeter systems. One will be a hadronic calorimeter, which will be the first hadronic calorimeter ever used in an experiment at RHIC, and another will be a new compact electromagnetic calorimeter. Both calorimeters will cover a region of ±1.1 in pseudorapidity and 2π in phi. The hadron calorimeter will be based on scintillator plates interspersed between steel absorber plates and read out with wavelength shifting fibers. The electromagnetic calorimeter will be an accordion design that will utilize scintillating fibers embedded in a matrix consisting of tungsten plates, tungsten powder and epoxy. The readout for both calorimeters will use silicon photomultipliers. The overall design of these two calorimeter systems is described along with the R&D efforts currently being pursued to develop them along with their readout.

1. Introduction

The PHENIX Experiment is planning a major new upgrade that will greatly enhance its physic capabilities for measuring jets in heavy ion collisions at RHIC, and well as in polarized proton interactions, and eventually in electron ion collisions at an Electron Ion Collider. This upgrade, called sPHENIX [1], will involve removing the current PHENIX central magnet and two central spectrometer arms and replacing them with a new superconducting solenoid magnet and two new calorimeter systems, one electromagnetic and the other hadronic, that will cover approximately ± 1.1 units in pseudorapidity and 2π in phi. The hadronic calorimeter will be the first hadronic calorimeter ever used in an experiment at RHIC and will, for the first time, provide the ability to measure the total energy of jets produced in heavy ion collisions, and allow a detailed study of the Quark Gluon Plasma near the region of its critical temperature. The electromagnetic calorimeter will be located just outside the solenoid magnet at a radius of 95 cm. These calorimeters, along with the VTX silicon tracking detector from the current PHENIX experiment, will form the basis of the new central spectrometer for sPHENIX. Figure 1 shows this new configuration with the present PHENIX North and South Muon Arms still in place. However, there are also additional plans to upgrade both of these arms in the future to enhance the capabilities of sPHENIX for pA, polarized proton and EIC physics.

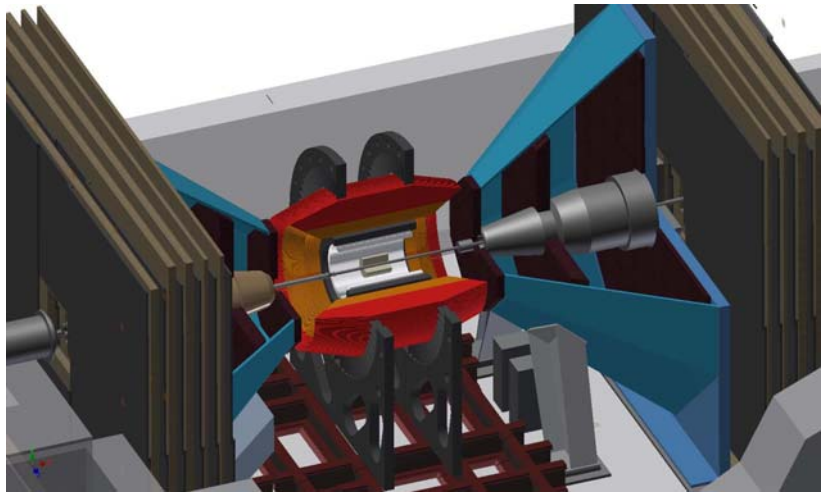

Figure 1. New central detectors for the sPHENIX Experiment with the present PHENIX North and South Muon Arms still in place. The yellow and red objects are the inner and outer sections of the hadron calorimeter and the dark grey cylinder is the electromagnetic calorimeter. The white cylinder is the superconducting solenoid and the small inner cylinder near the beam pipe is the current PHENIX VTX detector.

2. Detector requirements

The design of the two calorimeter systems is driven by the detector requirements to perform the physics measurements in the sPHENIX experiment. The primary goal is to measure jets in heavy ion collisions, which places demands on the energy resolution and segmentation of both the EMCAL and the HCAL. However, for events containing jets in heavy ion collisions, there is a significant amount of energy deposited in the calorimeter from the large number of particles produced in the underlying event of accompanying soft collisions. Various sophisticated algorithms have been developed to subtract this background energy from the total energy measured for the jet, but ultimately, the fluctuations on this energy limits the jet energy resolution. As a result, the calorimeter energy resolution need not be better than the limitations imposed on the jet energy resolution by the fluctuations in the energy of the underlying event. This leads to a requirement of ~ $100\%/\sqrt{E}$ for the HCAL and ~ $15\%/\sqrt{E}$ for the EMCAL for measuring the jet energy. Other physics measurements, such as measuring γ-jet correlations and direct photons at high p_T ($p_T > 10$ GeV/c) are also consistent with these requirements. The requirements on the segmentation are $\Delta\eta\times\Delta\phi \sim 0.1\times0.1$ for the HCAL and $\Delta\eta\times\Delta\phi \sim 0.025\times0.025$ for the EMCAL, which are mainly driven again by the high particle multicity in heavy ion collisions. For other physics measurements, such as measuring heavy quarkonia, tagged heavy flavor jets and high-z fragmentation functions, an additional tracking system that would add additional layers of silicon tracking to the current VTX detector would be required, and is being pursued as a future upgrade option. In addition, a future preshower detector would be added that would enable the measurement of high p_T π^0's (p_T up to ~ 40 GeV/c) and also provide the capability of resolving the high mass Y states.

We have performed a full GEANT4 simulation of the sPHENIX detector and used this to study the expected performance of the two calorimeter systems. The EMCAL was simulated using a simple geometry consisting of cylindrical layers of absorber and scintillator, as opposed to the actual geometry as described below, but with the same sampling fraction as the real calorimeter will have. The hadronic calorimeter was simulated using the actual geometry of the proposed design.

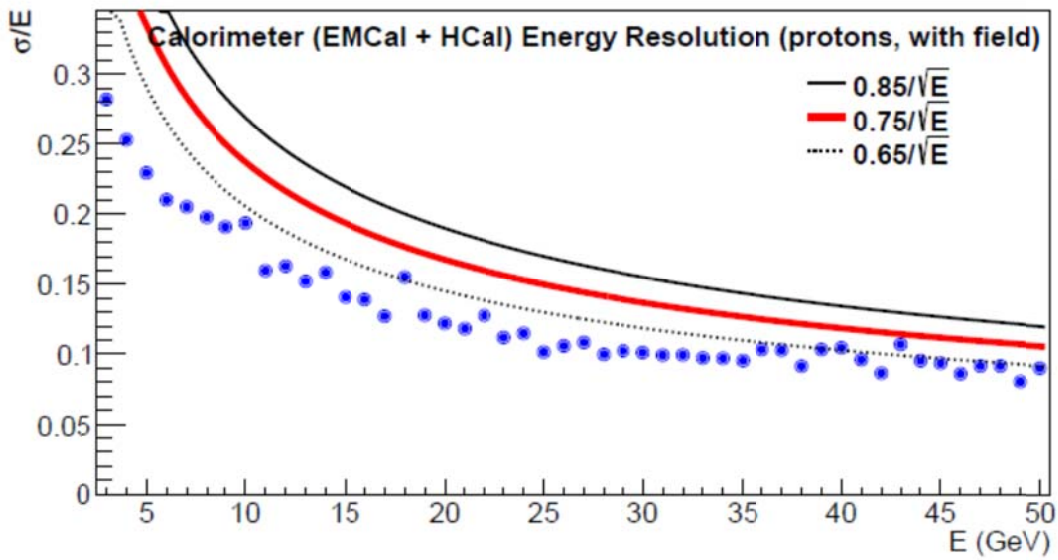

Figure 2. Energy resolution of the combined EMCAL and HCAL for protons in the full sPHENIX detector. Blue points are the simulated results compared with three resolution curves. The red curve at 75%/√E is the single particle design requirement.

Figure 2 shows the energy resolution of the combined EMCAL and HCAL systems for a single particle (proton) as a function of energy obtained from a full GEANT4 simulation of the sPHENIX detector. The calorimeters sit behind the solenoid magnet and VTX detector and include the effect of the magnetic field. The blue points give the simulated results, and the curves show three different values for the energy resolution. The design requirement for the single particle energy resolution is 75%/√E, and the results therefore indicate that the current design exceeds this requirement.

3. The Hadronic Calorimeter

The hadronic calorimeter will consist of alternating layers of steel and scintillator plates oriented parallel to the beam direction in a fin-like arrangement as shown in Fig. 3. The steel plates will be tapered such that their thickness increases with radius with uniform thickness (~7 mm) scintillator plates interspersed in between. Since the absorber thickness varies with the depth inside the calorimeter, the sampling fraction for the hadronic shower will also change with depth. However, the calorimeter will be divided into two longitudinal sections, as shown in Fig. 3a, which will allow a correction to the measured energy using the weighted average of the longitudinal shower position obtained from the two sections of the calorimeter. The total depth will be ~ 5 λ_{abs} (1 m), with approximately 1.5 λ_{abs} in the front section and 3.5 λ_{abs} in the back section. The electromagnetic calorimeter in front will add an additional 1 λ_{abs} to the total hadronic absorption length. It will be divided into 22 towers in η and 64 towers in ϕ for both the inner and outer sections for a total of 2816 towers. The plates will be slightly tilted (~ ± 5º) in the ϕ direction in order to avoid channeling of particles passing through the scintillator alone. The scintillator plates will be read out with wavelength shifting fibers placed in a serpentine groove, as shown in Fig. 3c, which in turn will be read out using silicon photomultipliers (SiPMs), similar to the readout used for the T2K experiment. We therefore expect a light yield similar to what T2K obtained (~ 12 p.e./MIP/tile, giving ~ 400 p.e./GeV) [3]. The front section of the calorimeter will be read out at the inner radius and the rear section will be read out at the outer radius. The steel plates will also serve as the flux return for the solenoid magnet.

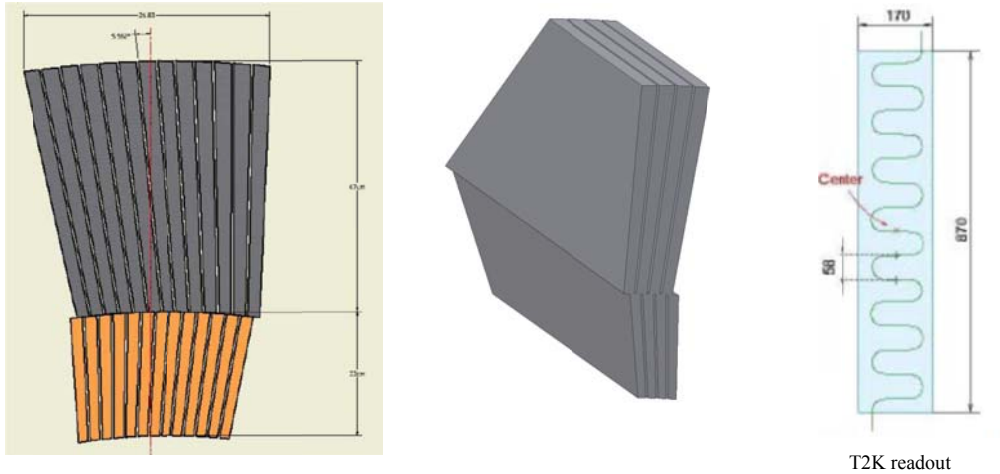

Figure 3. a) Orientation of the plates in the front (orange) and rear (grey) compartments of the hadronic calorimeter b) Steel plates joined together to form one section c) Readout of a scintillating tile using a wavelength shifting fiber in a serpentine groove used by the T2K experiment. A similar readout will be used for this calorimeter**.**

4. The Electromagnetic Calorimeter

The electromagnetic calorimeter will be an accordion design consisting of layers of scintillating fibers and tungsten plates held together with epoxy containing tungsten powder. The resulting matrix will have a very high density (~ 17 g/cm^3), a small Moliere radius (R_M = 1.5 cm) and a short radiation length (X_0 = 5 mm), making the calorimeter very compact, and allowing it to be placed at a small radial distance from the beam (~ 95 cm) and still provide good separation of nearby showers. The total depth will be ~ 17 X_0 and will extend only ~ 10 cm in the radial direction. It will have sampling frequency of ~ 0.6 X_0, a sampling fraction ~ 4%, and an energy resolution ~ 15%/$\sqrt{E}$. It will be projective in the transverse plane (perpendicular to the beam) and approximately projective in pseudorapidity (only approximate projectivity is required in η since the interaction verticies are spread over ~ ± 30 cm along the beam direction). The calorimeter will be divided into 96 towers in η and 256 towers in ϕ, each with a dimension of ~ 2x2 cm^2, for a total of 24,576 towers.

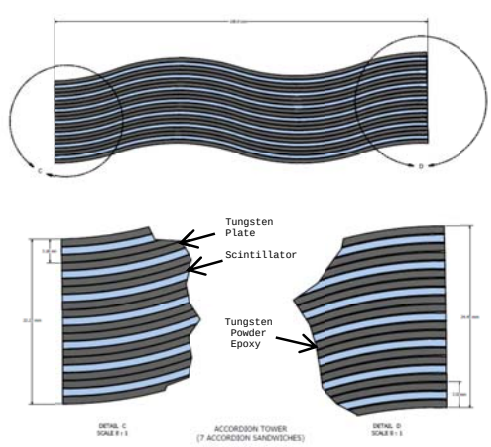

Figure 4. Layered structure of the tungsten-scintillating fiber accordion.

Fig 4 shows the layered structure of the tungsten scintillating fiber accordion design. It consists of 1 mm scintillating fibers embedded in a matrix of tungsten powder and epoxy that is glued between two thin (~ 1 mm) accordion shaped tungsten plates that have a length of ~ 1.4 m (half the length of the calorimeter) along the beam direction. The thickness of the tungsten-epoxy layer increases with depth, thus providing a projective geometry in the r-ϕ plane. The fibers are placed in a fan-like arrangement along the beam direction such that they point back towards the intersection region. Seven of the layer structures are glued together to form towers, then several towers are glued together to form modules, which are then assembled together in a ring to form the complete calorimeter.

Figure 5 shows an example of a tungsten powder epoxy layer containing several scintillating fibers that was produced by Tungsten Heavy Powder [2], which is a company that we are working with to develop the various calorimeter components. The results so far have been extremely encouraging in terms of producing thin tungsten sheets with embedded layers of scintillating fibers and tungsten powder epoxy that can be formed an accordion shape. During the coming year, we plan to build a prototype calorimeter module consisting of a 5x5 array of ~ 2x2 cm^2 towers that will be placed in a test beam in order to carry out a detailed study of its properties.

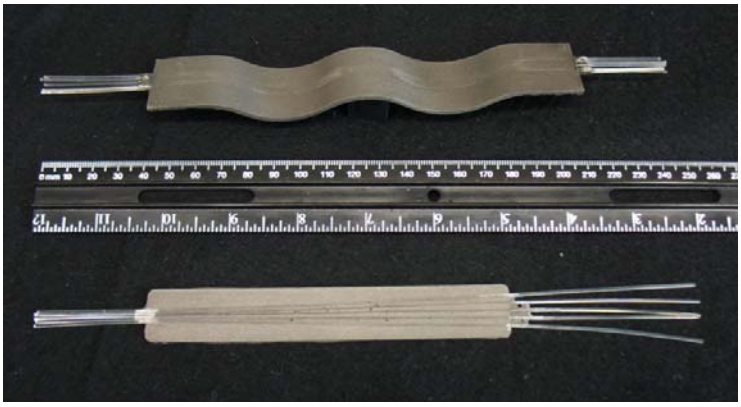

Figure 5. Accordion layer (top) containing tungsten powder epoxy and embedded scintillating fibers.

In the accordion configuration, the light output of the fibers is of primary concern, since it is important to have sufficient light output to achieve good energy resolution. We have studied the light output from various types of fibers embedded in different types of epoxies in a geometry similar to that of the accordion calorimeter. We find that the light output from the fibers is significantly reduced when they are embedded in the epoxy, mainly due to the loss of the cladding light, and the resulting light yield is ~ 100 photoelectrons per MeV of energy deposit in the scintillator when the fibers are read out directly with a photomultiplier tube. With a sampling fraction of ~ 4% in our current design, this corresponds to ~ 4000 p.e./GeV of energy deposit in the calorimeter. However, we will need to randomize and collect the light from approximately 150 fibers from a roughly 2x2 cm^2 tower onto a single 3x3 mm^2 SiPM within a very short distance (~ 2-3 cm). We plan to do this with either a small reflecting cavity or a wavelength shifting block at the back of the calorimeter tower. Assuming only a geometrical factor of 2% for the light collection (which we expect will be much higher with either the reflecting cavity or the WLS block), and a factor of 2.5 higher photon detection efficiency for the SiPM relative to the PMT, we should be able achieve a light yield ~ 200 p.e./GeV for the calorimeter, which is sufficient to not affect the overall energy resolution.

5. Electronics and Readout

Both the EMCAL and the HCAL will use silicon photomultipliers for their readout. We are currently investigating devices from different manufacturers, but a device such as the 3x3 mm^2 Hamamatsu S10362-33-025C would be suitable. It contains 14.4K 25 μm micropixels, which would provide a dynamic range of a few times 10^3, and a photon detection efficiency of ~ 25%. Each SiPM will have its own biasing circuit, temperature sensor and preamp. The temperature sensor will be used to measure the temperature locally and apply a small correction voltage to the bias in order to achieve gain equalization and stability. We are considering two different readout systems at the present time, one which is based on an existing PHENIX ADC system (previously used for the PHENIX Hadron Blind Detector) and another that would use a new custom designed ASIC (currently being developed by PHENIX collaborators at Oak Ridge National Lab) that would provide a preamp for the SiPMs which would be read out using the Beetle chip as an analog buffer and the CERN Scalable Readout System (SRS). Both readout systems are currently being investigated and a complete readout chain will be tested during the coming months.

6. Summary and Conclusions

The PHENIX Experiment at RHIC is planning a major upgrade that will include two new calorimeter systems. One will be a hadronic calorimeter that will provide a measurement of the total energy of jets produced in heavy ion collisions for the first time at RHIC, and a new electromagnetic calorimeter that will provide an independent measurement of the electromagnetic energy. Both calorimeters will cover a region of ± 1.1 units in pseudorapidity and 2π in phi. The requirements on the energy resolution for the two calorimeters is not particularly stringent due to the large background in measuring the jet energy from the fluctuations in the energy deposited in the calorimeter from the underlying event. The energy resolution requirement for measuring jets in the hadron calorimeter is ~ $100\%/\sqrt{E}$ and ~ $15\%/\sqrt{E}$ for the electromagnetic calorimeter. A preliminary design of both calorimeters has been completed and is included in the sPHENIX upgrade proposal that was submitted to Brookhaven National Laboratory in July of 2012, and will later be submitted as a Major Instrumentation and Equipment (MIE) proposal to the Nuclear Physics Office of the U.S. Department of Energy. R&D and further development on current design is proceeding and we expect to build and test prototypes of both calorimeters during the coming year.

7. References

[1] Aidala C 2012 *sPHENIX: An Upgrade Concept from the PHENIX Collaboration*, arXiv:1207.6378v1 [nucl-ex].

[2] Tungsten Heavy Powder, San Diego, CA, http://www.tungstenheavypowder.com/

[3] Izmaylov A, et.al., *Scintillator Counters with WLS fiber/MPPC Readout for the Side Muon Range Detector (SMD) for the T2K Experiment*, Nucl. Inst. Meth. A623 (2010) 382-384.