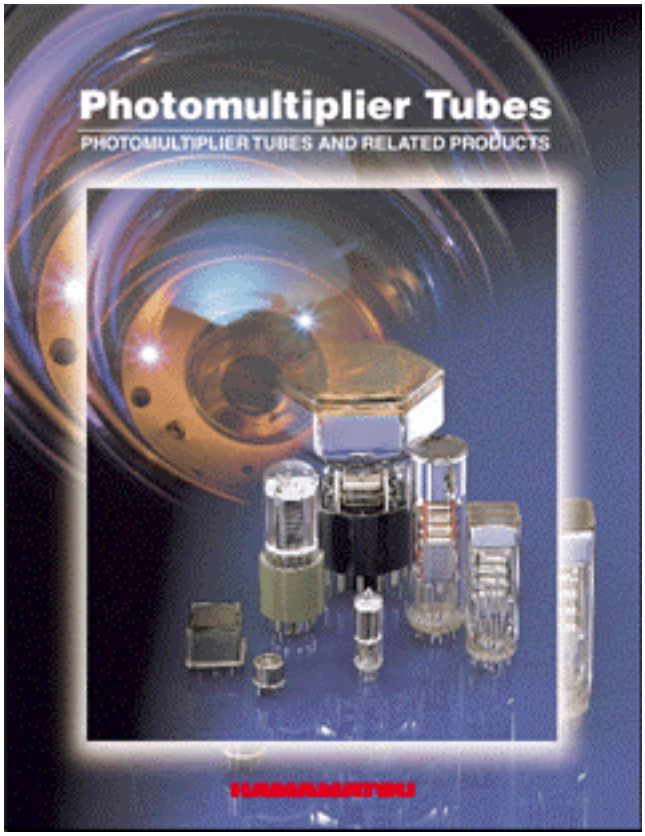

2002 Catalog Excerpts
Photomultiplier Tube Assemblies

For additional information visit us on the web at http://usa.hamamatsu.com

Photomultiplier Tube Assemblies

TACCF0133

Photomultiplier Tube Assemblies

Photomultiplier tube assemblies are made up of a photomultiplier tube, a voltage-divider circuit and other components, all integrated into a single case.

Type No.	Assembly Dia. (mm)	PMT Dia. (inch)	Built-in PMT	Curve Code	Wavelength (nm)	Out-line No.	Ⓕ Dynode Structure / Stages	Max. Rating: Anode to Cathode Voltage Max. (V)	Max. Rating: Divider Current Max. (mA)	Anode to Cathode Supply Voltage (V)	Cathode Sensitivity: Luminous Typ. (μA/lm)	Cathode Sensitivity: Blue Sensitivity Index (CS 5-58) Typ.
H3164-10	φ10.5	3/8	R1635	400K	300 to 650	1	L/8	-1500	0.41	-1250	100	9.5
H3695-10	φ11.3	3/8	R2496	400S	160 to 650	2	L/8	-1500	0.37	-1250	100	9.5
H3165-10	φ14.3	1/2	R647	400K	300 to 650	3	L/10	-1250	0.34	-1000	110	10.0
H6520	φ23.5	3/4	R1166	400K	300 to 650	4	L/10	-1250	0.33	-1000	110	10.5
H6524	φ23.5	3/4	R1450	400K	300 to 650	5	L/10	-1800	0.43	-1500	115	11.0
H6612	φ23.5	3/4	R3478	400K	300 to 650	6	L/8	-1800	0.35	-1700	115	11.0
H6152-70	φ31.0	1	R5505	—	300 to 650	7	FM/15	+2300	0.41	+2000	80	9.5
H6533	φ31.0	1	R4998	400K	300 to 650	8	L/10	-2500	0.36	-2250	70	9.0
H7415	φ33.0	1-1/8	R6427	400K	300 to 650	9	L/10	-2000	0.41	-1500	95	11.0
H3178-51	φ47.0	1-1/2	R580	400K	300 to 650	10	L/10	-1750	0.63	-1500	95	11.0
H8409-70	φ38.0	1-1/2	R7761	—	300 to 650	11	FM/19	+2300	0.33	+2000	80	9.5
H6410	φ60.0	2	R329-02	400K	300 to 650	12	L/12	-2700	0.67	-2000	90	10.5
H1949-51	φ60.0	2	R1828-01	400K	300 to 650	13	L/12	-3000	0.70	-2500	90	10.5
H2431-50	φ60.0	2	R2083	400K	300 to 650	14	L/8	-3500	0.61	-3000	80	10.0
H6614-70	φ60.0	2	R5924	—	300 to 650	15	FM/19	+2300	0.33	+2000	70	9.0
H6156-50	φ60.0	2	R5496	400K	300 to 650	16	L/10	-3000	0.71	-2500	80	10.0
H7195	φ60.0	2	R329-02	400K	300 to 650	17	L/12	-2700	1.23	-2000	90	10.5
H8318-70	φ71.0	2-1/2	R6504	—	300 to 650	18	FM/19	+2300	0.33	+2000	70	9.0
H6559	φ83.0	3	R6091	400K	300 to 650	19	L/12	-2500	0.62	-2000	90	10.5
H6525	φ84.5	3	R4143	400K	300 to 650	20	L/12	-3000	0.70	-2500	80	9.5
H6527	φ142.0	5	R1250	400K	300 to 650	21	L/14	-3000	1.02	-2000	70	9.0
H6528	φ142.0	5	R1584	400U	185 to 650	21	L/14	-3000	1.02	-2000	70	9.0
H8711	□30	—	R5900-00-M16	—	300 to 650	22	MC/12	-1000	0.35	-800	80	8.5
H7546	□30	—	R5900-00-M64	—	300 to 650	23	MC/12	-1000	0.46	-800	80	8.5
H7260	▭ 52 × 24	—	R7259	—	185 to 650	24	MC/10	-900	0.37	-800	70	8.0

CAUTION: Photomultiplier tube assemblies are not designed to operate in a vacuum.

Anode Characteristics

Luminous	Gain	Dark Current		Time Response			Pulse Linearity		Notes	Type No.
Typ. (A/lm)	Typ.	Typ. (nA)	Max. (nA)	Tr Typ. (ns)	Tt Typ. (ns)	TTS Typ. (ns)	2 % Typ. (mA)	5 % Typ. (mA)		
100	1.1×10^6	1	50	0.8	9.0	0.5	3	7	H3164-11 (with 50 Ω *)	H3164-10
100	1.1×10^6	2	50	0.7	9.0	0.5	3	7	H3695-11 (with 50 Ω *)	H3695-10
150	1.4×10^6	1	2	2.5	24	1.6	3	7	H3165-11 (with 50 Ω *)	H3165-10
110	1.0×10^6	1	5	2.5	27	2.8	2	7	H6520-01 (with 50 Ω *)	H6520
200	1.7×10^6	3	50	1.8	19	0.76	2	8	H6524-01 (with 50 Ω *)	H6524
200	1.7×10^6	10	300	1.3	14	0.36	2	8	H6612-01 (with 50 Ω *)	H6612
40	5.0×10^5	5	30	1.5	5.6	0.35	180	250		H6152-70
400	5.7×10^6	100	800	0.7	10	0.16	40	70	H6610 (R5320)	H6533
475	5.0×10^6	10	200	1.7	16	0.5	10	30	H7415-01 (with 50 Ω *) H7416 (R7056)	H7415
75	7.9×10^5	2	15	2.7	40	4.5	150	200		H3178-51
800	1.0×10^7	15	100	2.1	7.5	0.35	350	500		H8409-70
270	3.0×10^6	10	100	2.7	40	1.1	100	200	H6521 (R2256) H6522 (R5113)	H6410
1800	2.0×10^7	50	400	1.3	28	0.55	100	200	H3177-50 (R2059)	H1949-51
200	2.5×10^6	100	800	0.7	16	0.37	100	150	H3378-50 (R3377)	H2431-50
700	1.0×10^7	30	200	2.5	9.5	0.44	500	700		H6614-70
1000	1.3×10^7	100	800	1.5	24	0.27	100	150		H6156-50
270	3.0×10^6	10	100	2.7	40	1.1	80	110		H7195
700	1.0×10^7	50	300	2.7	11	0.47	700	1000		H8318-70
900	1.0×10^7	30	120	2.3	40	1.5	80	110		H6559
400	5.0×10^6	50	500	1.8	32	0.6	100	180		H6525
1000	1.4×10^7	50	300	2.5	54	1.2	100	150		H6527
1000	1.4×10^7	50	300	2.5	54	1.2	100	150		H6528
280	3.5×10^6	0.8/ch	—	0.83	—	0.3	0.5/ch	1/ch	16 Multianode H8711-10 (Taper Divider Type)	H8711
24	3.0×10^5	0.2/ch	—	1.0	—	0.3	0.3/ch	0.6/ch	64 Multianode	H7546
140	2.0×10^6	0.2/ch	2/ch	0.6	—	0.18	0.6/ch	0.8/ch	32 Linearanode H7260A (-HV Cable Input Type)	H7260

Note: * marks = 50 Ω is a terminal resistor at anode output.

Photomultiplier Tube Assemblies Dimensional Outlines and Diagrams (Unit: mm)

❶ H3164-10

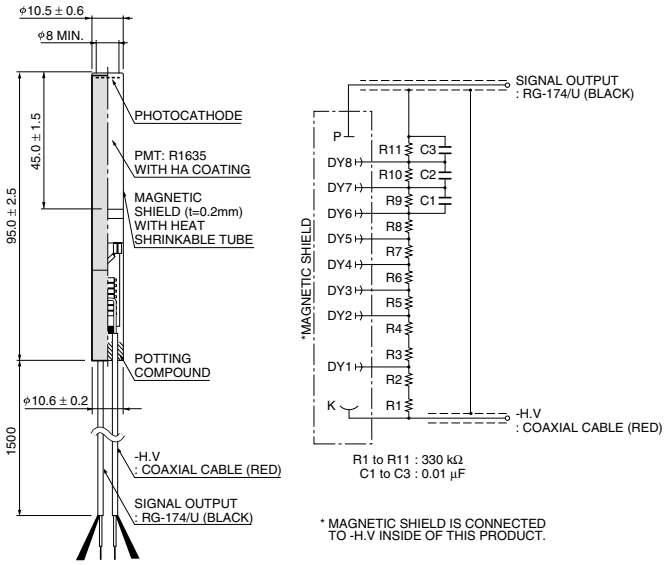

TPMHA0309EB

❷ H3695-10

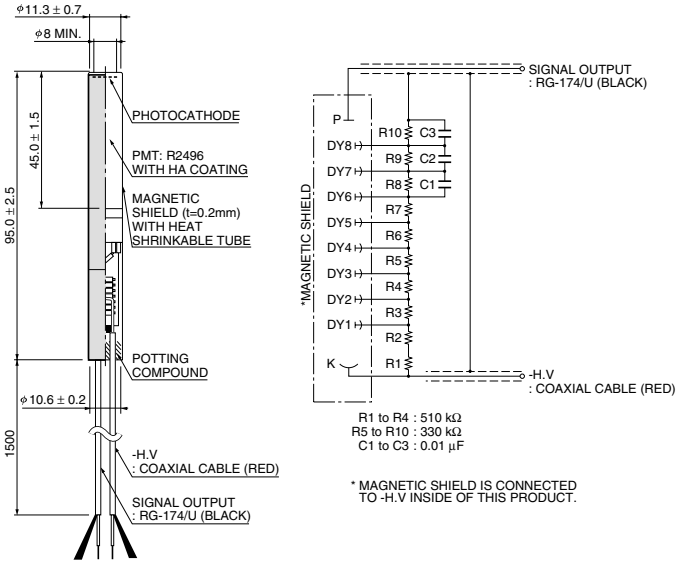

TPMHA0310EC

❸ H3165-10

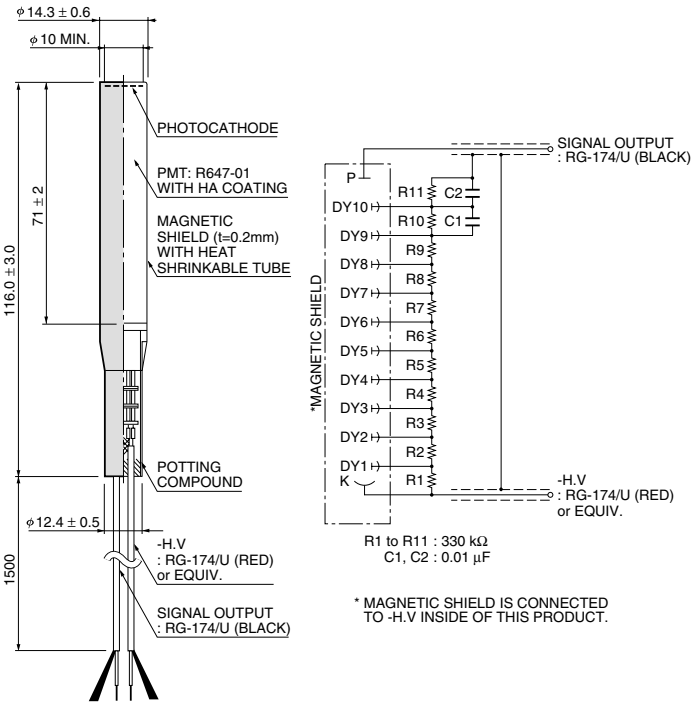

TPMHA0311EB

❹ H6520

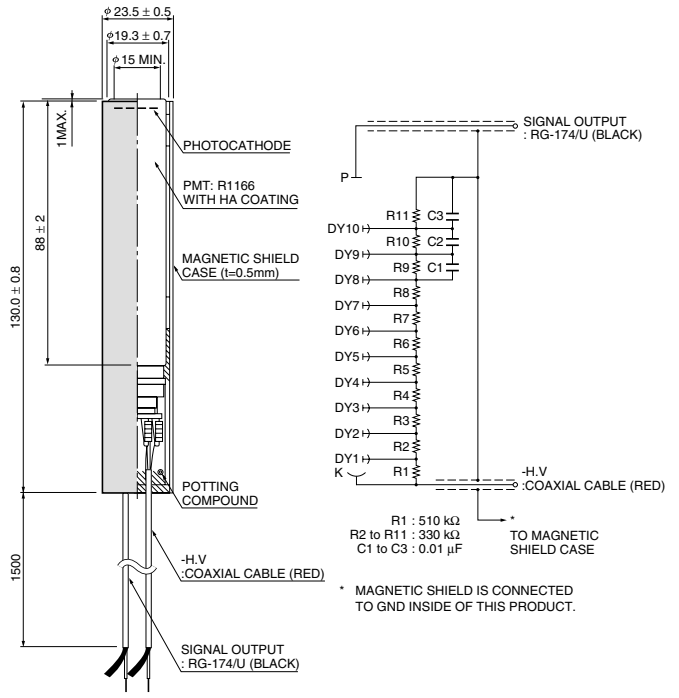

TPMHA0312EB

❺ H6524

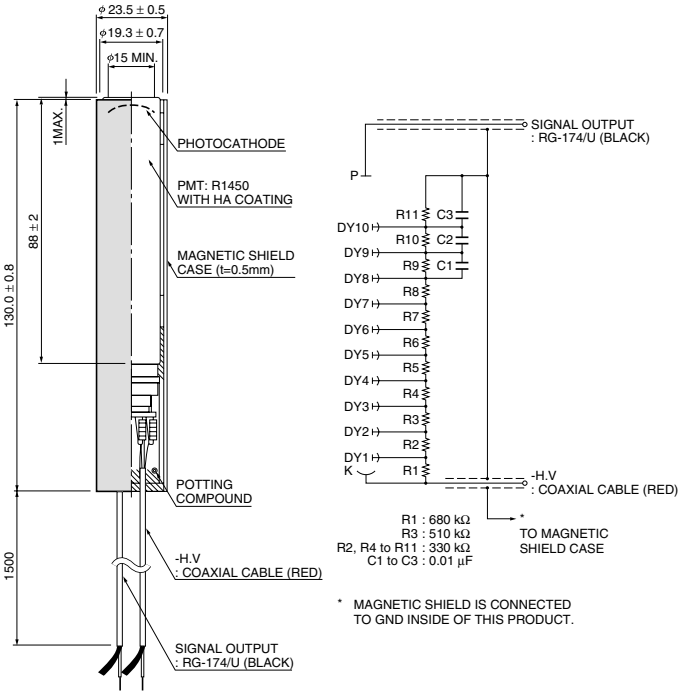

TPMHA0313EA

❻ H6612

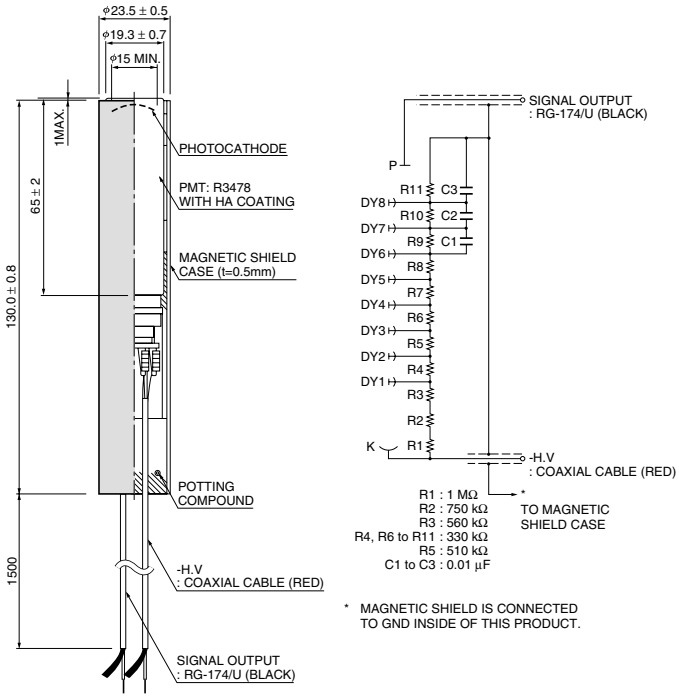

TPMHA0315EA

❼ H6152-70

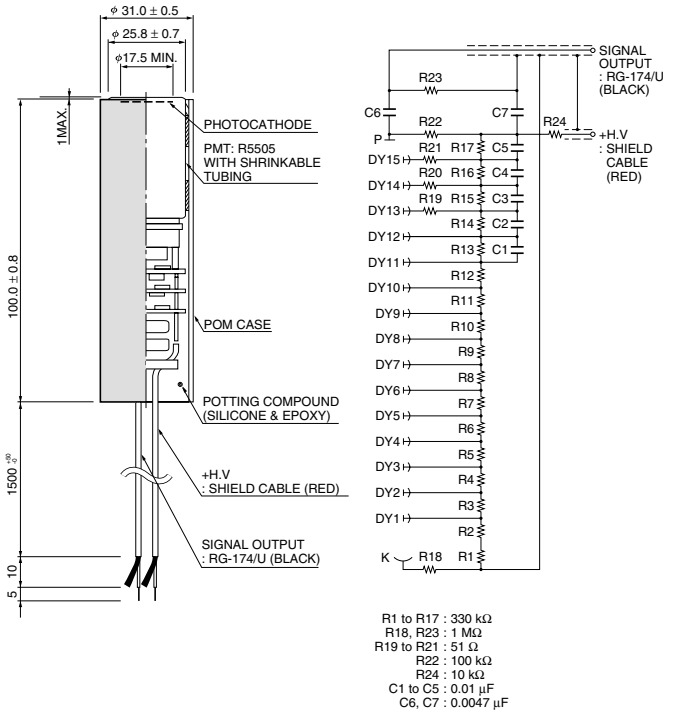

TPMHA0470EA

❽ H6533

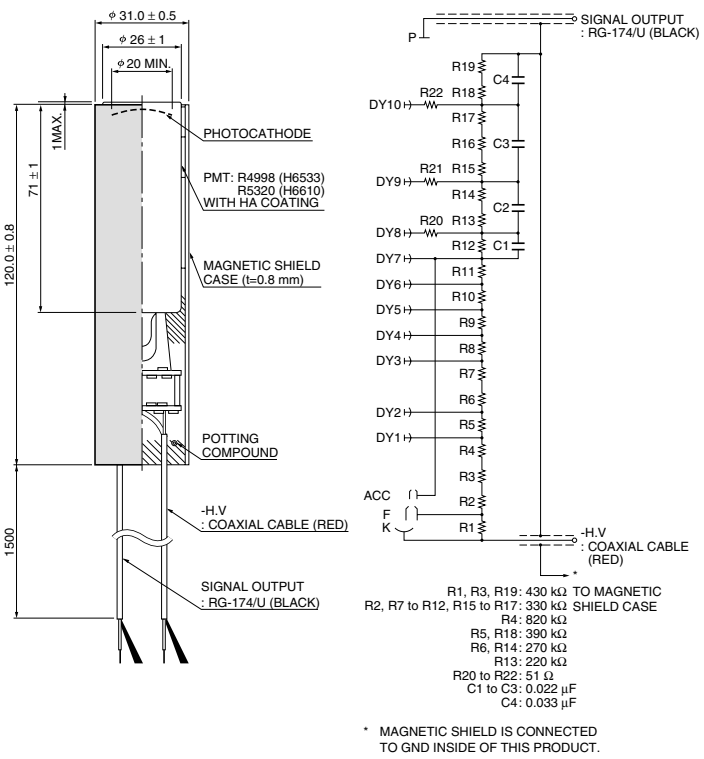

TPMHA0317EB

⑨ H7415

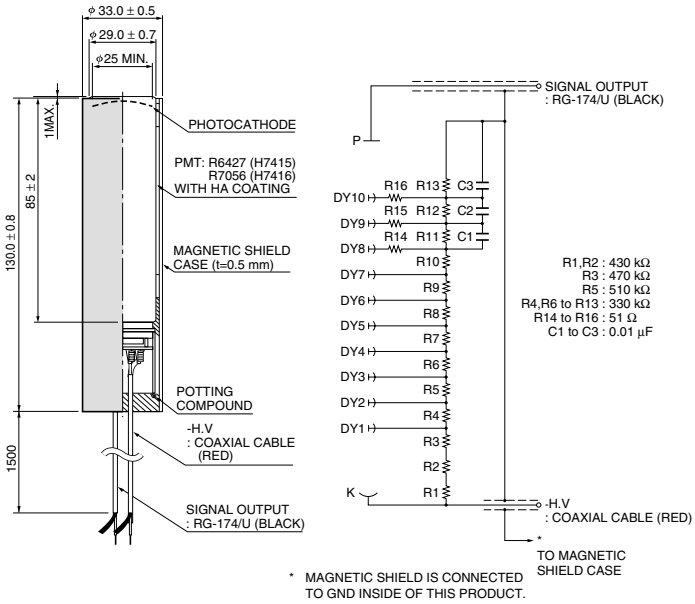

* MAGNETIC SHIELD IS CONNECTED TO GND INSIDE OF THIS PRODUCT.

TPMHA0318EB

⑩ H3178-51

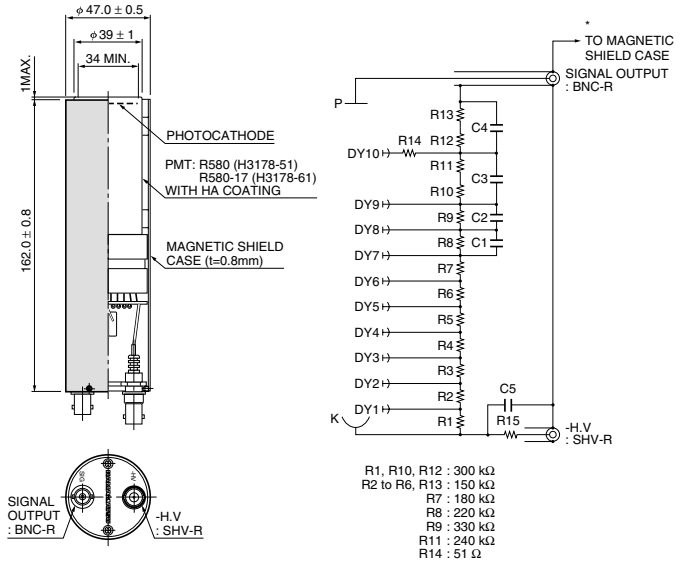

* R580-17 has a plano-concave face plate.

* MAGNETIC SHIELD IS CONNECTED TO GND INSIDE OF THIS PRODUCT.

TPMHA0320EB

⑪ H8409-70

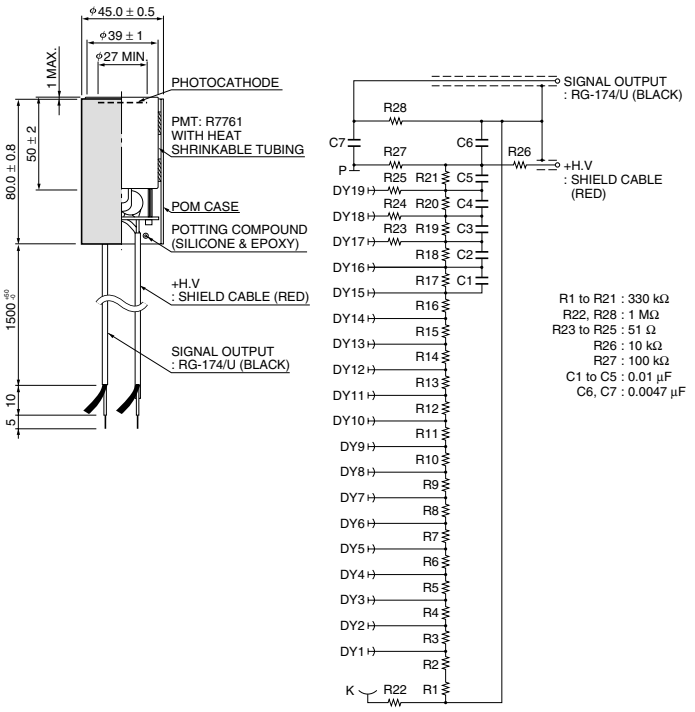

TPMHA0476EA

⑫ H6410

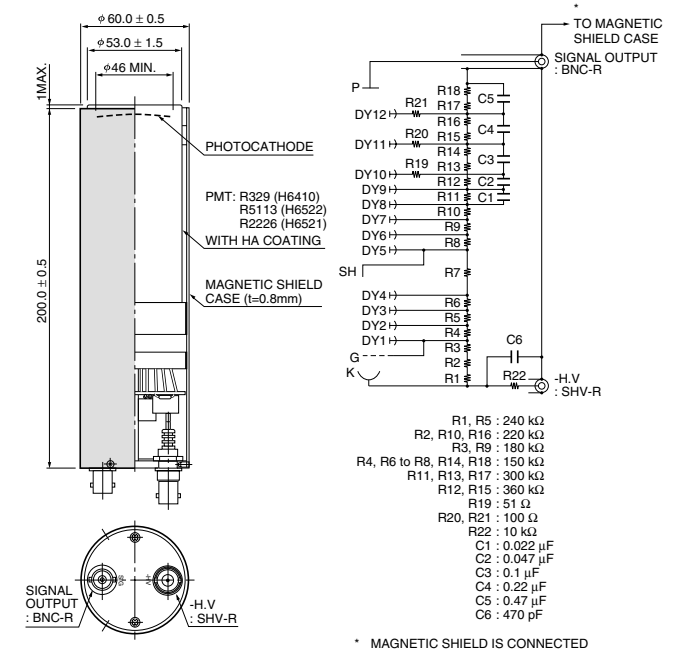

* MAGNETIC SHIELD IS CONNECTED TO GND INSIDE OF THIS PRODUCT.

TPMHA0324EB

⑬ H1949-51

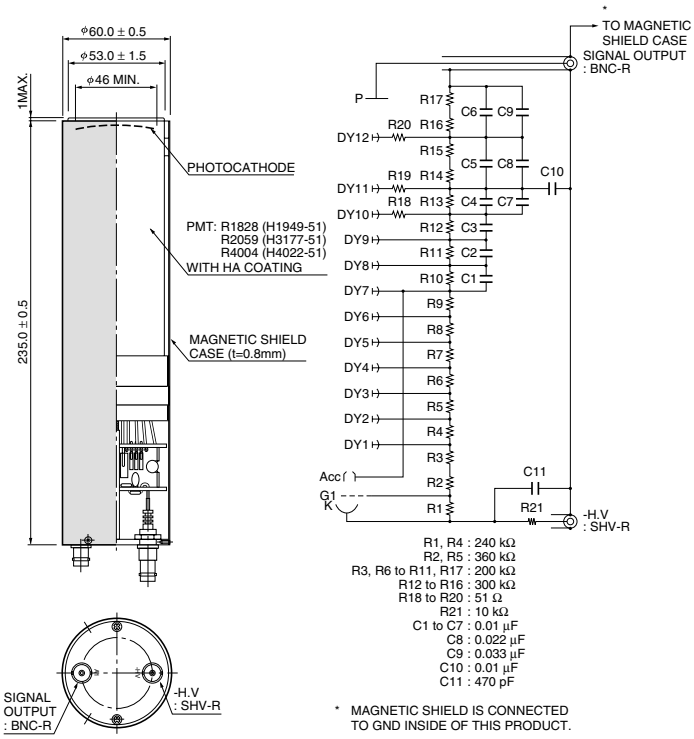

TPMHA0326EC

⑭ H2431-50

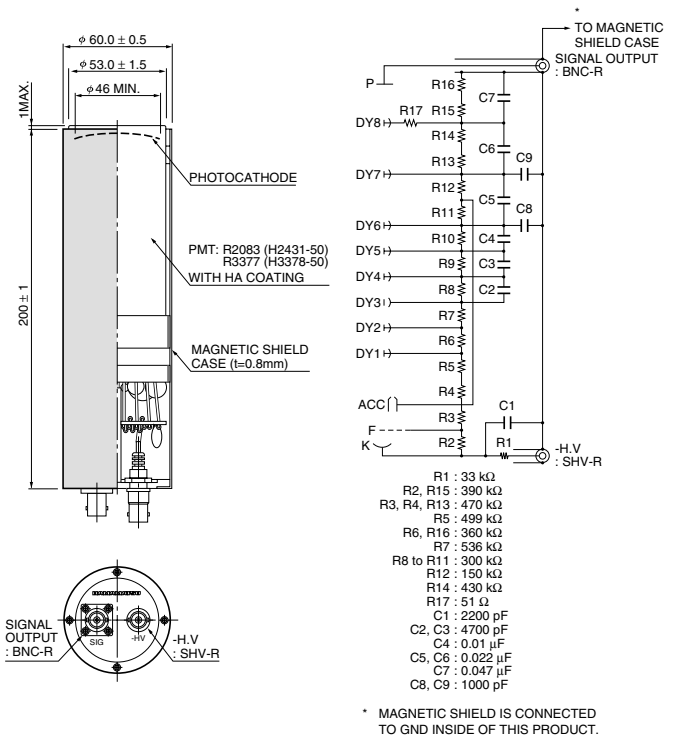

TPMHA0327EB

⑮ H6614-70

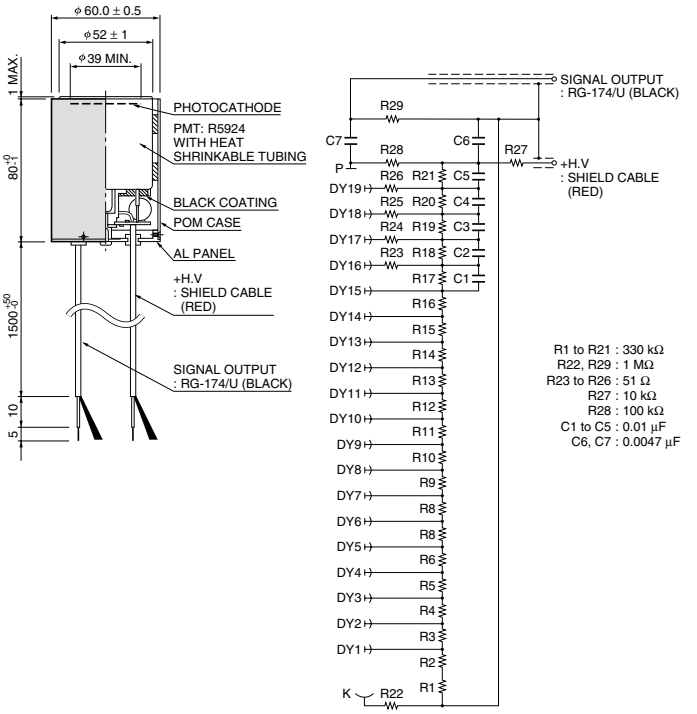

TPMHA0472EA

⑯ H6156-50

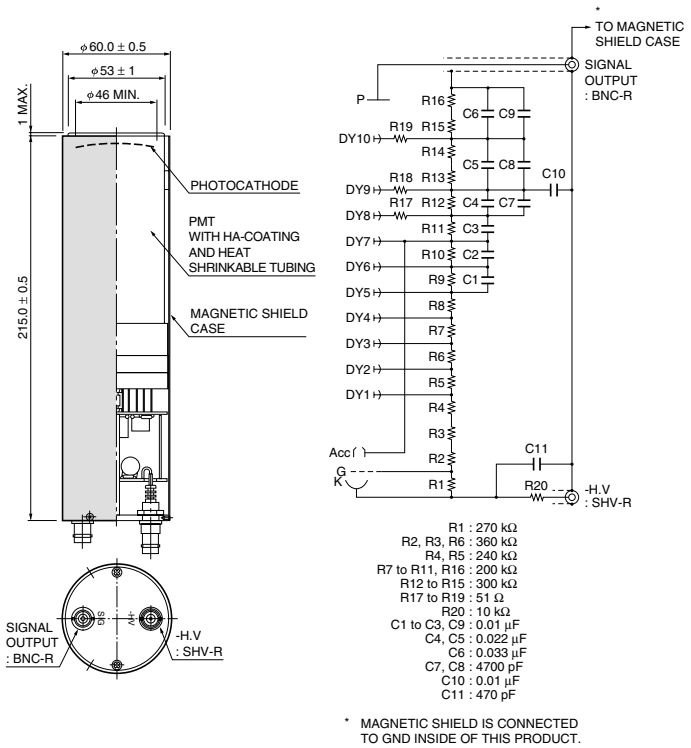

TPMHA0489EA

Photomultiplier Tube Assemblies Dimensional Outlines and Diagrams (Unit: mm)

⑰ H7195

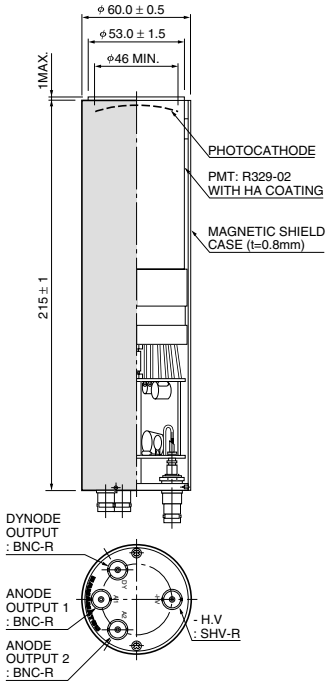

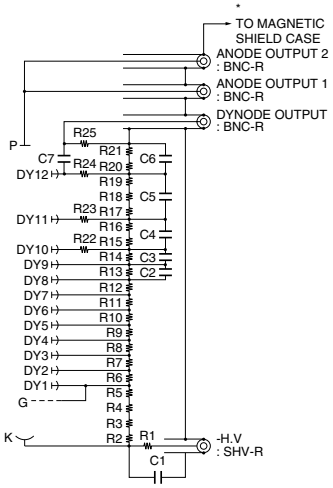

R1, R25 : 10 kΩ
R2 to R4, R17 to R19 : 110 kΩ
R5, R6, R8 to R13, R15
R16, R20, R21 : 100 kΩ
R7, R14 : 160 kΩ
R22 : 51 Ω
R23, R24 : 100 Ω
C1 : 470 pF
C2 : 0.022 μF
C3 : 0.047 μF
C4 : 0.1 μF
C5 : 0.22 μF
C6 : 0.47 μF
C7 : 0.01 μF

* MAGNETIC SHIELD IS CONNECTED TO GND INSIDE OF THIS PRODUCT.

TPMHA0323EB

⑱ H8318-70

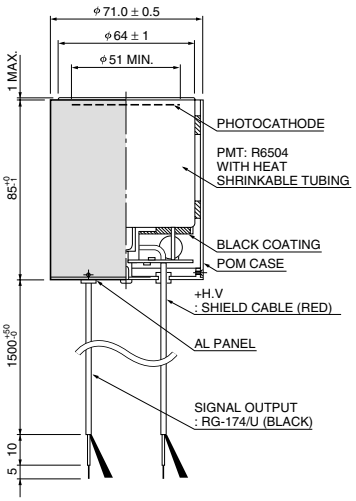

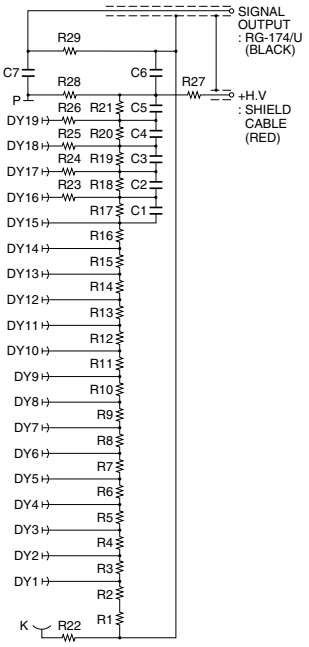

R1 to R21 : 330 kΩ
R22, R29 : 1 MΩ
R23 to R26 : 51 Ω
R27 : 10 kΩ
R28 : 100 kΩ
C1 to C5 : 0.01 μF
C6, C7 : 0.0047 μF

TPMHA0473EA

⑲ H6559

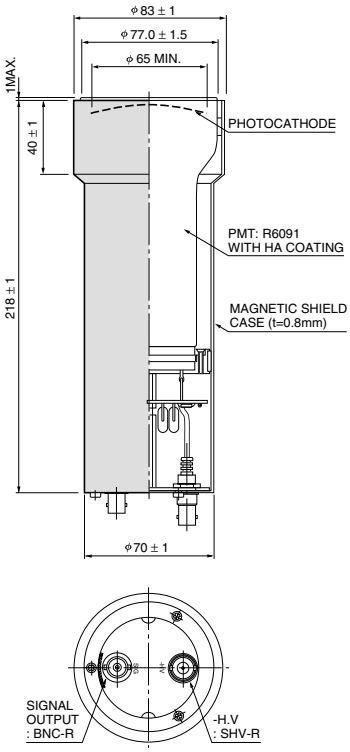

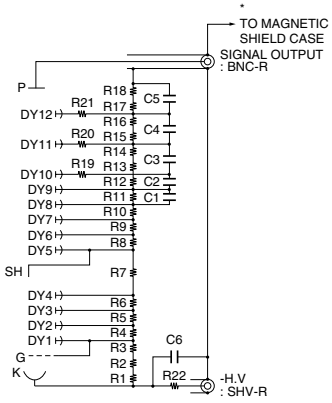

R1, R5 : 240 kΩ
R2, R10, R16 : 220 kΩ
R3, R9 : 180 kΩ
R4, R6 to R8, R14, R18 : 150 kΩ
R11, R13, R17 : 300 kΩ
R12, R15 : 360 kΩ
R19 : 51 Ω
R20, R21 : 100 Ω
R22 : 10 kΩ
C1 : 0.022 μF
C2 : 0.047 μF
C3 : 0.1 μF
C4 : 0.22 μF
C5 : 0.47 μF
C6 : 470 pF

* MAGNETIC SHIELD IS CONNECTED TO GND INSIDE OF THIS PRODUCT.

TPMHA0331EB

⑳ H6525

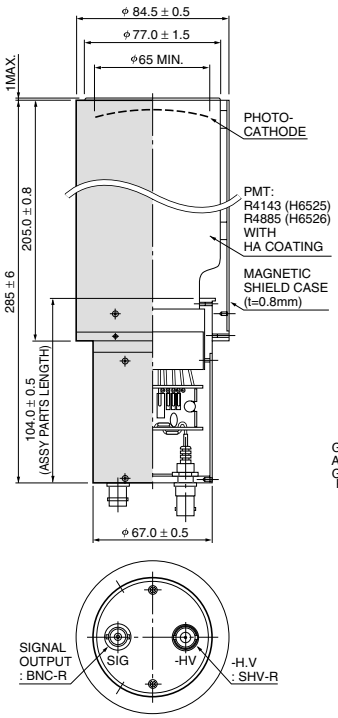

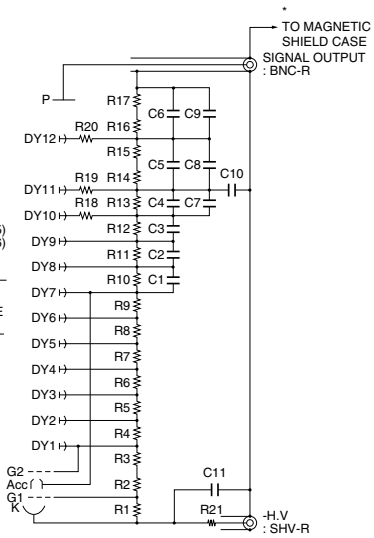

R3, R4 : 240 kΩ
R2, R5 : 360 kΩ
R1, R6 to R11, R17 : 200 kΩ
R12 to R16 : 300 kΩ
R18 to R20 : 51 Ω
R21 : 10 kΩ
C1 to C7 : 0.01 μF
C8 : 0.022 μF
C9 : 0.033 μF
C10 : 0.01 μF
C11 : 470 pF

* MAGNETIC SHIELD IS CONNECTED TO GND INSIDE OF THIS PRODUCT.

TPMHA0330EB

21 H6527, H6528

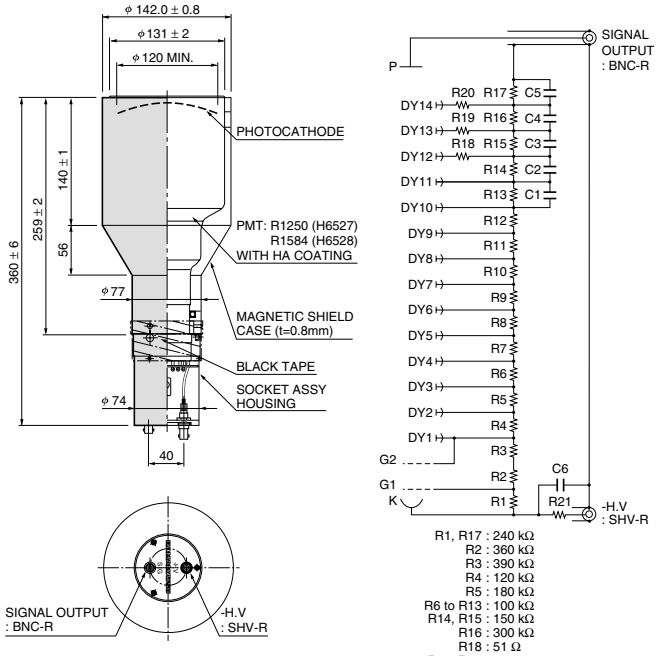

H6527=Flat window, Borosilicate
H6528=Curved window, UV glass

TPMHA0332EC

22 H8711

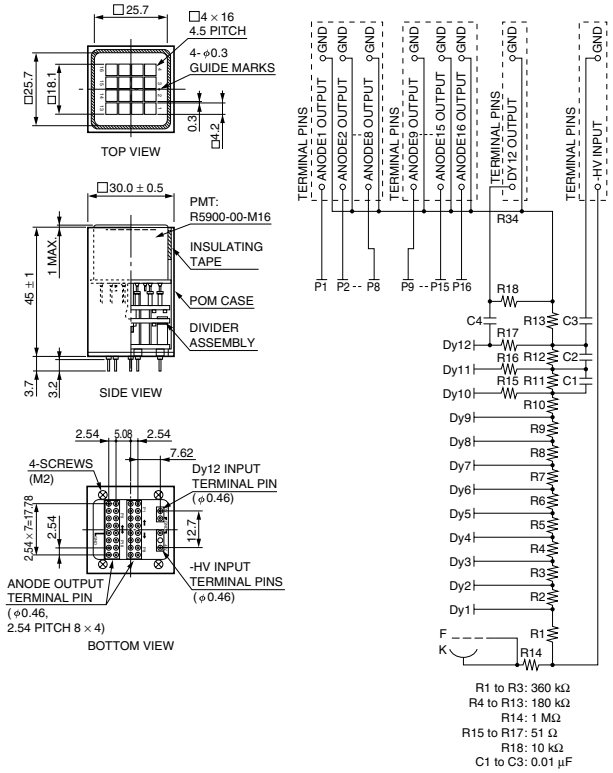

TPMHA0487EA

23 H7546

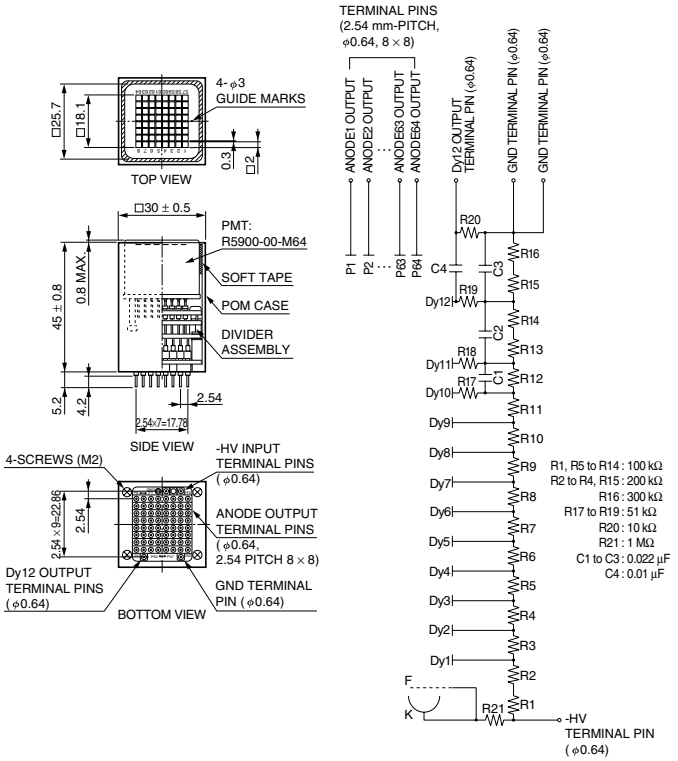

TPMHA0488EA

24 H7260

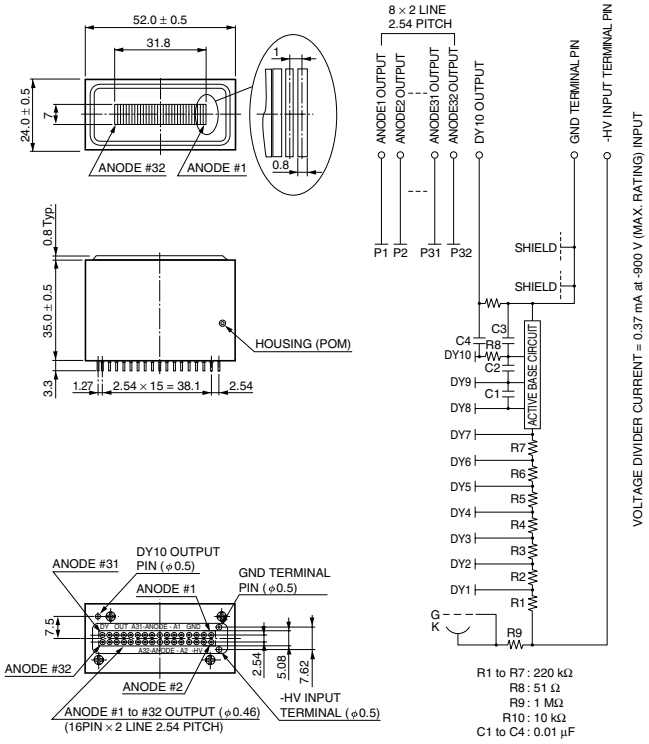

TPMHA0455ED

Notes

Ⓐ Types marked ∗ are newly listed in this catalog.

Ⓑ See pages 114 and 115 for typical spectral response charts.

Ⓒ Photocathode materials

BA :	Bialkali
LBA :	Low noise bialkali
HBA :	High temperature bialkali
MA :	Multialkali
EMA :	Extended red multialkali
DIA :	Diamond

Other photocathodes are indicated by the element symbols.

Ⓓ Window materials

MF :	MgF_2
Q :	Quartz (Fused silica or synthetic silica)
K :	Borosilicate glass
U :	UV glass

Ⓔ Base diagram

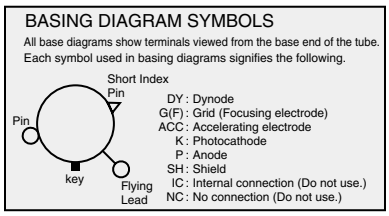

Ⓕ Dynode structure

B :	Box-and-grid
VB :	Venetian blind
CC :	Circular-cage
L :	Linear-focused
B + L :	Box and linear-focused
FM :	Fine mesh
CM :	Coarse mesh
MC :	Metal channel

Ⓖ See page 78 for suitable socket assemblies.
Mating sockets (E678 series)
*: A socket will be supplied with the tube.
No mark: Sockets may be obtained from electronics supply houses or our sales office.

Ⓗ Operating ambient temperature range for the photomultiplier itself is -30 °C to +50 °C except for some types of tubes.
However, when photomultiplier tubes are operated below -30 °C at their base section, please consult us in advance.

Ⓙ Averaged over any interval of 30 seconds maximum.

Ⓚ Measured at the peak sensitivity wavelength.

Ⓛ See page 62 for voltage distribution ratio.

Ⓜ Anode characteristics are measured with the supply voltage and voltage distribution ratio specified by Note L.

Cathode and anode characteristics are measured under the following conditions if noted.

ⓐ at 122 nm
ⓑ at 254 nm
ⓒ at 852 nm
ⓓ Measured using a red filter Toshiba IR-D80A
ⓔ at 4 A/lm
ⓕ at 10 A/lm
ⓖ at 1000 A/lm
ⓗ Dark count per second (s^{-1})
ⓙ Dark count per second (s^{-1}) after one hour storage at -20 °C
ⓚ Background noise per minute (min^{-1})

Caution and Warranty

SAFETY PRECAUTIONS

⚠ WARNING

HIGH VOLTAGE

A high voltage is applied to a photomultiplier tube during operation. Always provide adequate safety measures to prevent the operator or service personnel from electrical shock and the equipment from being damaged.

HIGH VOLTAGE

The outer surface of metal package PMT R7400 and R5900 is connected to the cathode. When this PMT is operated with a high negative voltage applied to the cathode, the package is also at a high negative voltage so caution is required.

HANDLING PRECAUTIONS

●Handle tubes with extreme care.
Photomultiplier tubes have evacuated glass envelopes. Allowing the glass to be scratched or subjected to shock can cause cracks. Take extreme care during handling, particularly for tubes with graded sealing on synthetic silica bulbs.

●Keep faceplate and base clean.
Do not touch the faceplate and base with bare hands. Dirt and grime on the faceplate causes loss of transmittance and dirt or grime on the base may cause ohmic leakage. If the faceplate becomes soiled wipe it clean using alcohol.

●Do not expose to strong light.
The photocathode of photomultiplier tubes may be damaged if exposed to direct sunlight or intense illumination. Never allow strong light to strike the photocathode.

●Carefully handle tubes with a glass base.
Photomultiplier tubes with a glass base (also called button stem) are less rugged than tubes with a plastic base, so sufficient care must be taken when handling this type of tube. When fabricating a voltage-divider circuit by soldering resistors and capacitors to socket lugs, solder them while the tube is fully inserted into the socket.

●Helium permeation through silica bulb
Helium will permeate through silica bulbs and increase noise, leading to damage that makes photomultiplier tubes unusable. Avoid operating or storing them in an atmosphere where helium is present.

WARRANTY

Hamamatsu photomultiplier tubes and related products are warranted to the original purchaser for a period of 12 months after delivery. The warranty is limited to repair or replacement of a defective product due to defects in workmanship or materials used in its manufacture.
Even if within the warranty period, the warranty shall not apply to failures due to misuse, mishandling, modification by the customer, or to accidents such as natural or man-made disasters.
The customer should inspect and test all products as soon as they are delivered.

ORDERING INFORMATION

hotomultiplier tubes and related products are warranted to the origiThis catalog lists photomultiplier tubes and related products currently available from Hamamatsu Photonics. Please select those products that best match your design specifications. If you do not find the products you want in this catalog, feel free to contact our sales office nearest you. We will modify our current products or design new types to meet your specific needs.

* Characteristics and specifications in this catalog are subject to change without prior notice due to product improvement or other factors.
Before you design equipment according to the characteristics and specifications of our products listed in this catalog, please con-

HAMAMATSU PHOTONICS K.K., Electron Tube Center
314-5, Shimokanzo, Toyooka-village, Iwata-gun, Shizuoka-ken, 438-0193, Japan
Telephone: (81)539/62-5248, Fax: (81)539/62-2205
http://www.hamamatsu.com

Main Products

Electron Tubes
Photomultiplier Tubes
Light Sources
Microfocus X-ray Sources
Image Intensifiers
X-ray Image Intensifiers
Microchannel Plates
Fiber Optic Plates

Opto-semiconductors
Si Photodiodes
Photo IC
PSD
InGaAs PIN photodiodes
Compound semiconductor photosensors
Image sensors
Light emitting diodes
Application products and modules
Optical communication devices
High energy particle/X-ray detectors

Imaging and Processing Systems
Video Cameras for Measurement
Image Processing Systems
Streak Cameras
Optical Measurement Systems
Imaging and Analysis Systems

JUN. 2002 REVISED

Information in this catalog is believed to be reliable. However, no responsibility is assumed for possible inaccuracies or omission. Specifications are subject to change without notice. No patent rights are granted to any of the circuits described herein.
© 2002 Hamamatsu Photonics K.K.

Sales Offices

ASIA:
HAMAMATSU PHOTONICS K.K.
325-6, Sunayama-cho,
Hamamatsu City, 430-8587, Japan
Telephone: (81)53-452-2141, Fax: (81)53-456-7889

U.S.A.:
HAMAMATSU CORPORATION
Main Office
360 Foothill Road, P.O. BOX 6910,
Bridgewater, N.J. 08807-0910, U.S.A.
Telephone: (1)908-231-0960, Fax: (1)908-231-1218
E-mail: usa@hamamatsu.com

Western U.S.A. Office:
Suite 110, 2875 Moorpark Avenue
San Jose, CA 95128, U.S.A.
Telephone: (1)408-261-2022, Fax: (1)408-261-2522
E-mail: usa@hamamatsu.com

United Kingdom:
HAMAMATSU PHOTONICS UK LIMITED
2 Howard Court, 10 Tewin Road Welwyn Garden City
Hertfordshire AL7 1BW, United Kingdom
Telephone: 44-(0)1707-294888, Fax: 44-(0)1707-325777
E-mail: info@hamamatsu.co.uk

France, Portugal, Belgiun, Switzerland, Spain:
HAMAMATSU PHOTONICS FRANCE S.A.R.L.
8, Rue du Saule Trapu, Parc du Moulin de Massy,
91882 Massy Cedex, France
Telephone: (33)1 69 53 71 00
Fax: (33)1 69 53 71 10
E-mail: infos@hamamatsu.fr

Swiss Office:
Richtersmattweg 6a
CH-3054 Schüpfen, Switzerland
Telephone: (41)31/879 70 70,
Fax: (41)31/879 18 74
E-mail: swiss@hamamatsu.ch

Belgian Office:
7, Rue du Bosquet
B-1348 Louvain-La-Neuve, Belgium
Telephone: (32)10 45 63 34
Fax: (32)10 45 63 67
E-mail: epirson@hamamatsu.com

Spanish Office:
Centro de Empresas de Nuevas Tecnologies
Parque Tecnologico del Valles
08290 CERDANYOLA, (Barcelona) Spain
Telephone: (34)93 582 44 30
Fax: (34)93 582 44 31
E-mail: spain@hamamatsu.com

Germany, Denmark, Netherland:
HAMAMATSU PHOTONICS DEUTSCHLAND GmbH
Arzbergerstr. 10,
D-82211 Herrsching am Ammersee, Germany
Telephone: (49)8152-375-0, Fax: (49)8152-2658
E-mail: info@hamamatsu.de

Danish Office:
Erantisvej 5, DK-8381 Tilst, Denmark
Telephone: (45)4346/6333, Fax: (45)4346/6350
E-mail: lkoldbaek@hamamatsu.de

Netherlands Office:
PO Box 50.075, 1305 AB Almere The Netherland
Telephone: (31)36-5382123, Fax: (31)36-5382124
E-mail: hamamatsu_NL@compuserve.com

Poland Office:
ul. Chodkiewicza 8, PL-02525 Warsaw, Poland
Telephone: (48)22-660-8340, Fax: (48)22-660-8352
E-mail: info@hamamatsu.de

North Europe:
HAMAMATSU PHOTONICS NORDEN AB
Smidesvägen 12
SE-171 41 Solna, Sweden
Telephone: (46)8-509-031-00, Fax: (46)8-509-031-01
E-mail: info@hamamatsu.se

Italy:
HAMAMATSU PHOTONICS ITALIA S.R.L.
Strada della Moia, 1/E
20020 Arese, (Milano), Italy
Telephone: (39)02-935 81 733, Fax: (39)02-935 81 741
E-mail: info@hamamatsu.it

Rome Office:
Via Fosso del Torrino, 51, 00144 Roma, Italy
Telephone: (39)06-52246492, Fax: (39)06-52246493
E-mail: inforoma@hamamatsu.it

Hong Kong:
HAKUTO ENTERPRISES LTD.
Room 404, Block B,
Seaview Estate, Watson Road, North Point, Hong Kong
Telephone: (852)25125729, Fax: (852)28073155

Taiwan:
HAKUTO Taiwan Ltd.
3F-6, No. 188, Section 5, Nanking East Road
Taipei, Taiwan R.O.C.
Telephone: (886)2-2753-0188, Fax: (886)2-2746-5282

KORYO ELECTRONICS CO., LTD.
9F-7, No.79, Hsin Tai Wu Road
Sec.1, Hsi-Chih, Taipei, Taiwan, R.O.C.
Telephone: (886)2-2698-1143, Fax: (886)2-2698-1147

Republic of Korea:
SANGKI TRADING CO., LTD.
Suite 431, World Vision Bldg.,
24-2, Yoido-Dong, Youngdeungpo-ku,
Seoul, 150-010 Republic of Korea
Telephone: (82)2-780-8515, Fax: (82)2-784-6062

Singapore:
HAKUTO SINGAPORE PTE. LTD.
Block 2, Kaki Bukit Avenue 1, #04-01 to #04-04
Kaki Bukit Industrial Estate, Singapore 417938
Telephone: (65)7458910, Fax: (65)7418201

Quality, technology, and service are part of every product.

TPMO0005E01
JUN. 2002 IP
(6000)