Bar 4

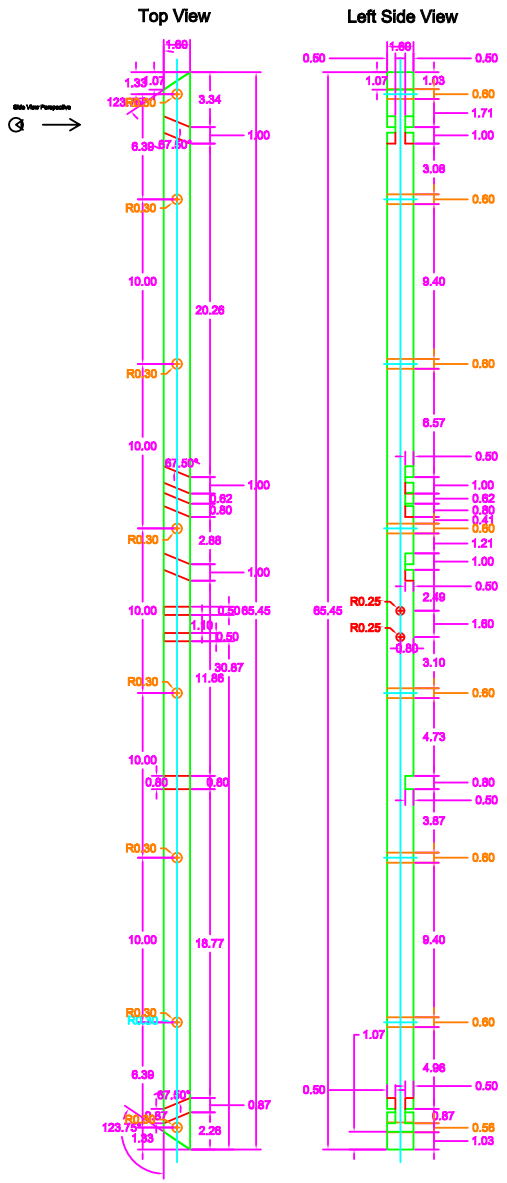

Bar 6

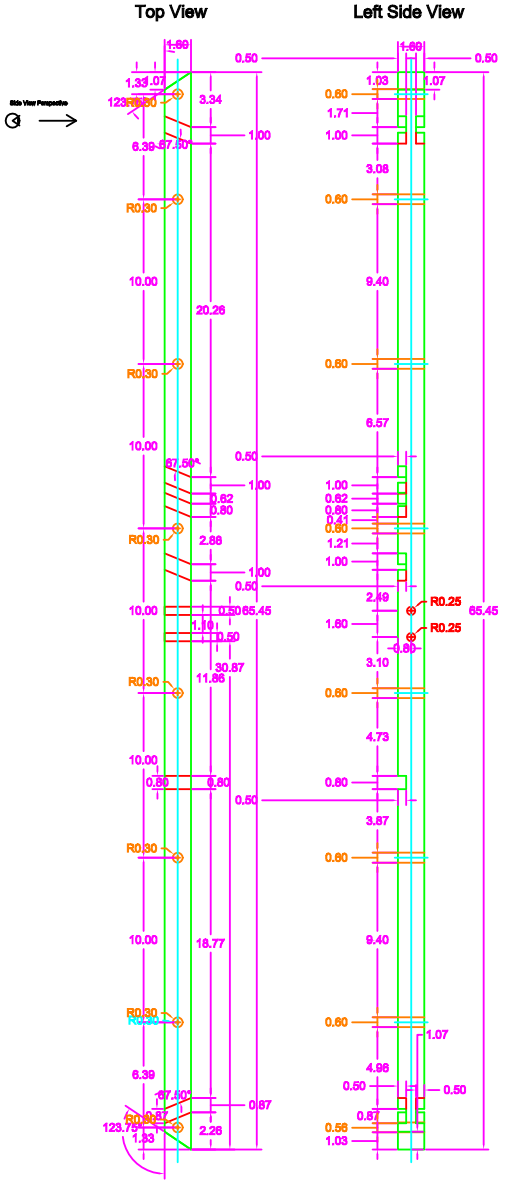

By Austin Basye (ACU)
e-mail:
austin.basye@gmail.com or
atb03a@acu.edu

Austin_Basye