REV.	REVISION DESCRIPTION	DRAWN BY	DATE
		APPROVED	DATE
A	CHANGED WIDTH OF STEPS	C.J. DAURER	10/22/08

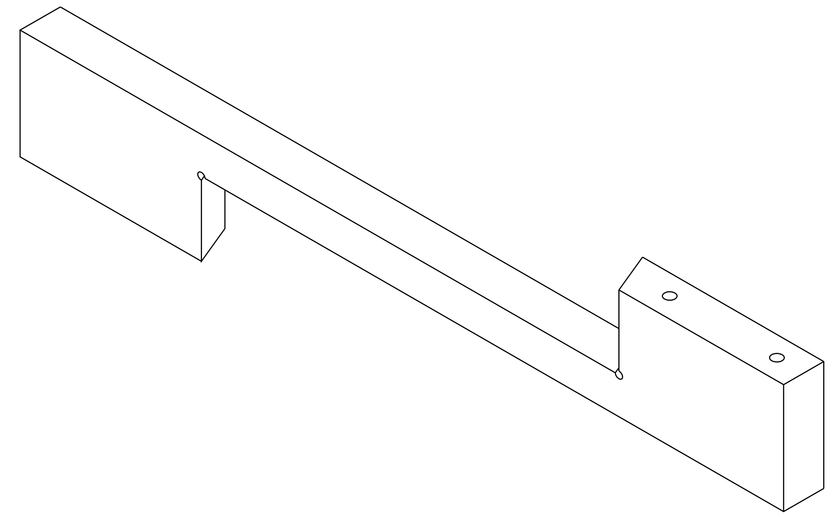

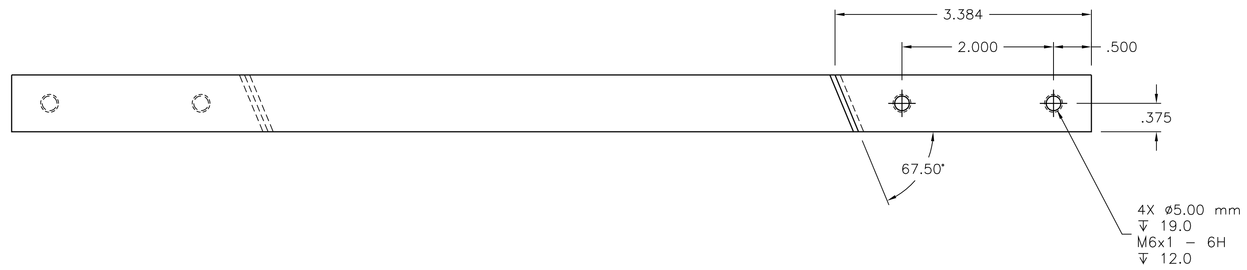

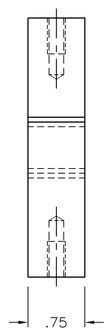

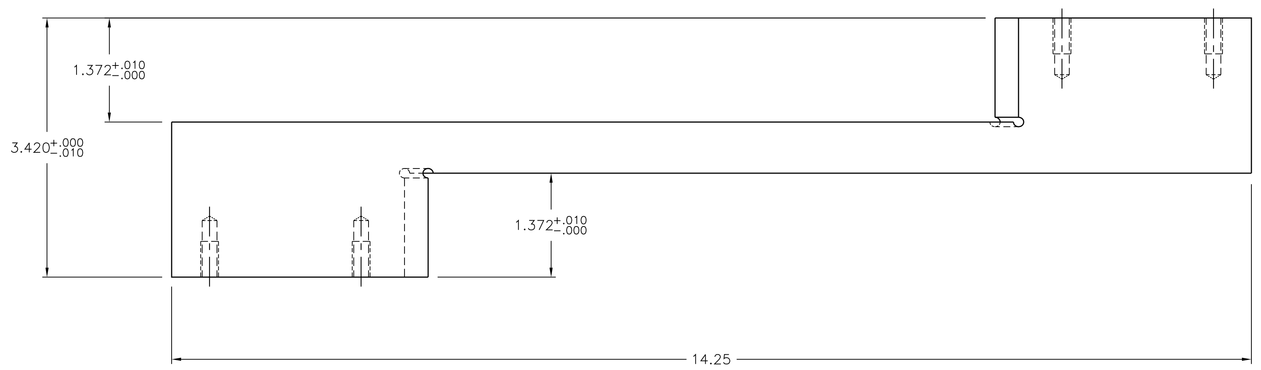

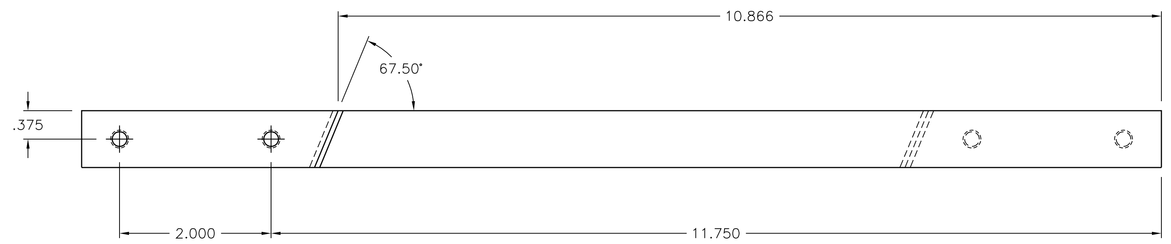

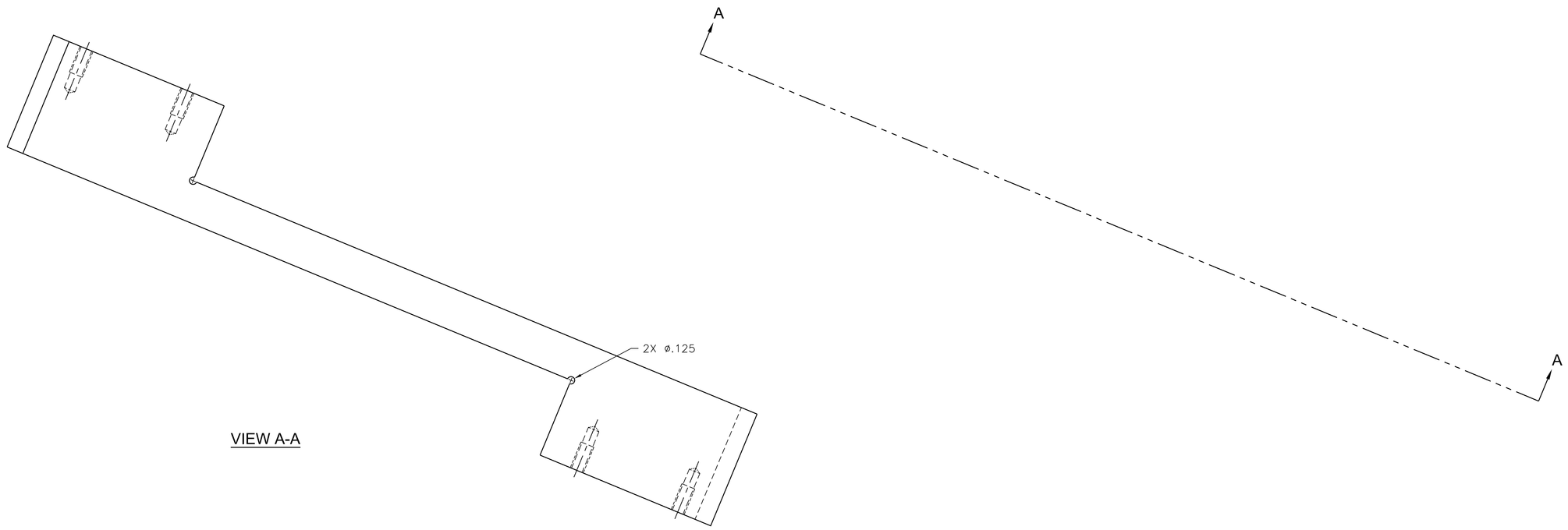

VIEW A-A

MATERIAL: AL 6061-T6		UNLESS OTHERWISE SPECIFIED • DIMENSIONS ARE IN INCHES • TOLERANCES ARE AS FOLLOWS:	BARTOSZEK ENGINEERING 818 WEST DOWNER PLACE AURORA, IL 60506-4904
		FRACTIONS ±1/32	
NEXT ASSEMBLY: PHENIX-E-0055, E-0056		DECIMALS .XX ±.02 .XXX ±.005	PHENIX RPC UPGRADE RPC3 FINAL DESIGN RPC3 S ALIGNMENT BRACKET ANGLED-BC DETAIL
		ANGLES ±0°30'	
ORIGINATOR	L. BARTOSZEK	SURFACE FINISH 125 MAX. ALL MACHINED SURFACES	
DRAWN BY	C.J. DAURER/L.B. 8/21/08	• BREAK ALL SHARP EDGES. • DO NOT SCALE DWG. • DIMENSIONING IN ACCORD WITH ANSI Y14.5 STANDARDS.	
CHECKED			
APPROVED			

SCALE	PROJECT NO.	SIZE	DRAWING NO.	SHEET NO.	REV
1=1		E	PHENIX-E-0079	1 of 1	A