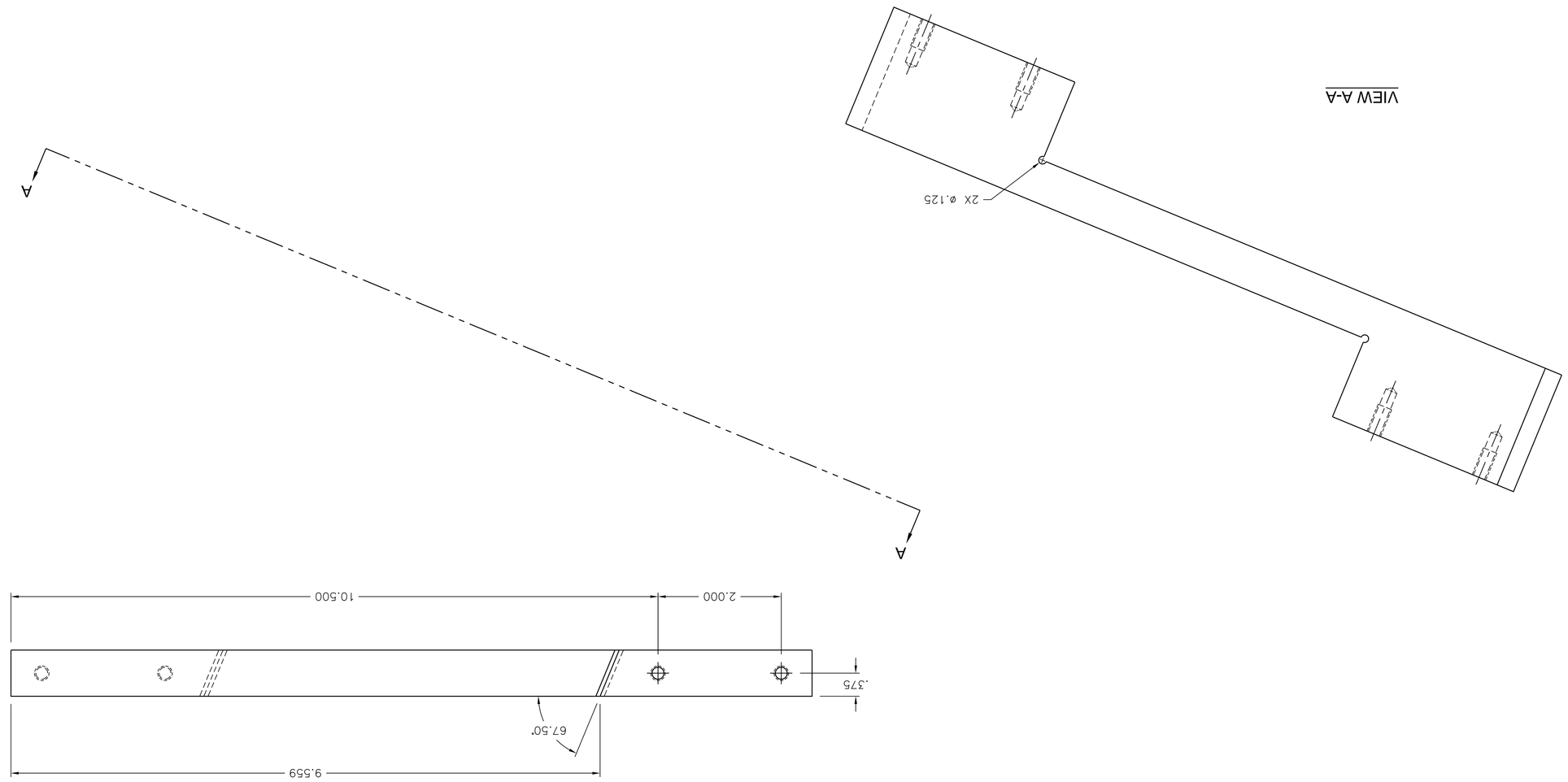

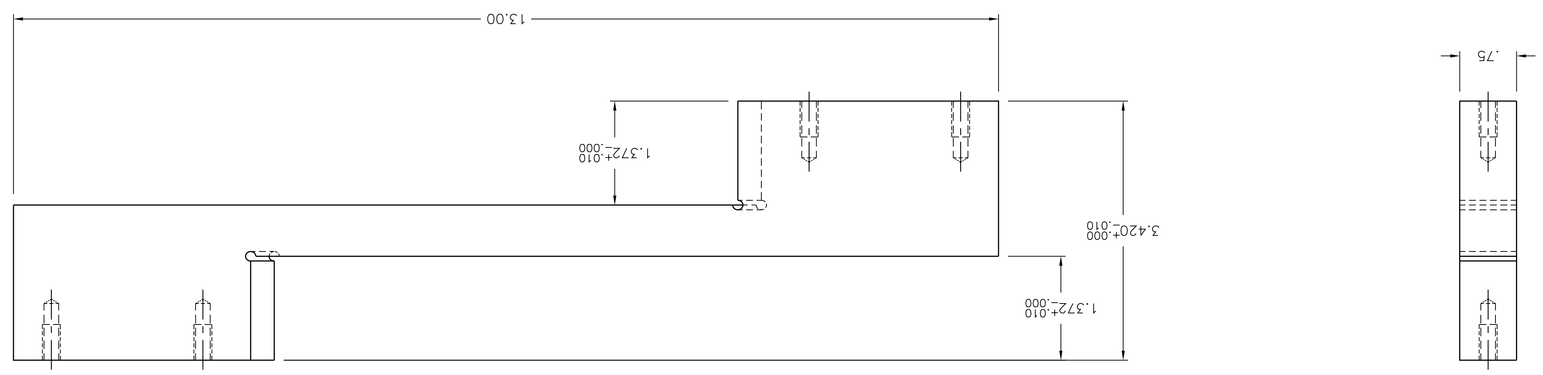

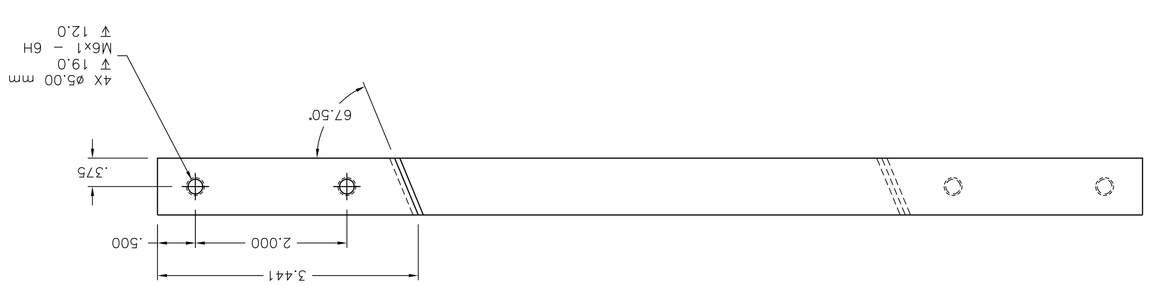

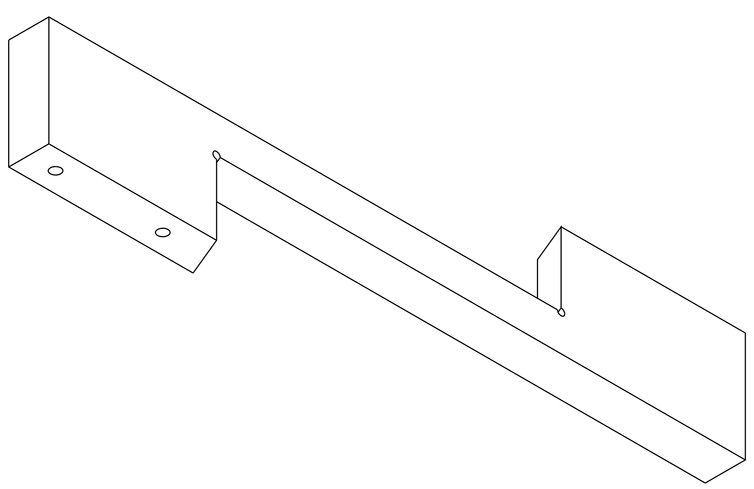

REV.	REVISION DESCRIPTION	DRAWN BY	DATE
A	CHANGED WIDTH OF STEPS	C.J. DAUBER	10/22/08
		APPROVED	DATE

BARTOSZEK ENGINEERING
818 WEST DOWNER PLACE
AURORA, IL 60506-4904

PHENIX RPC UPGRADE
RPC3 FINAL DESIGN
RPC3 S ALIGNMENT BRACKET ANGLED-AB DETAIL

MATERIAL: AL 6061-T6
NEXT ASSEMBLY: PHENIX-E-0055, E-0056
ORIGINATOR: L. BARTOSZEK
DRAWN BY: C.J. DAUBER/L.B. 8/21/08
CHECKED
APPROVED

UNLESS OTHERWISE SPECIFIED
• DIMENSIONS ARE IN INCHES
• TOLERANCES ARE AS FOLLOWS:
FRACTIONS ±1/32
DECIMALS .XX ±.02 .XXX ±.005
ANGLES ±0°30'
SURFACE FINISH 125√ MAX. ALL MACHINED SURFACES
• BREAK ALL SHARP EDGES.
• DO NOT SCALE DWG.
• DIMENSIONING ACCORD WITH ANSI Y14.5 STANDARDS.

SCALE	PRODUCT NO.	SIZE	DRAWING NO.	SHEET NO.	REV
1=1		E	PHENIX-E-0078	1 of 1	A