REV.	REVISION DESCRIPTION	DRAWN BY	DATE
		APPROVED	DATE
A	MOVED BOLT HOLE FOR REDESIGNED PART	L. BARTOSZEK	10/23/08

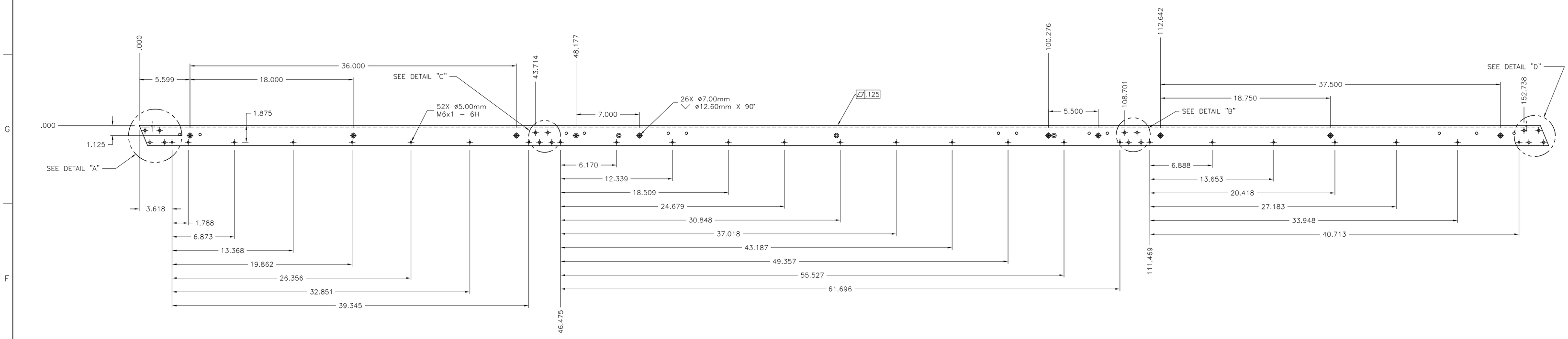

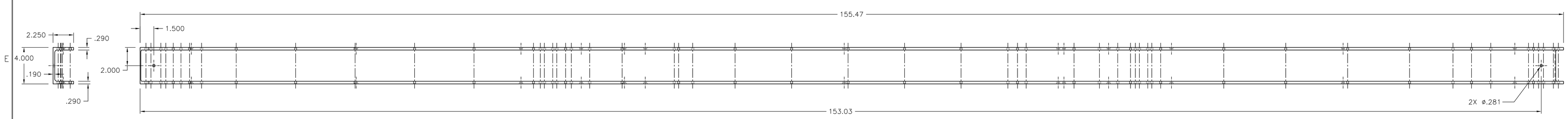

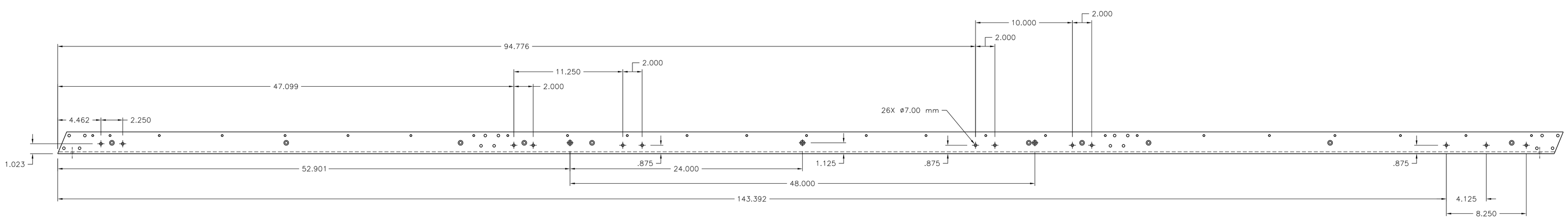

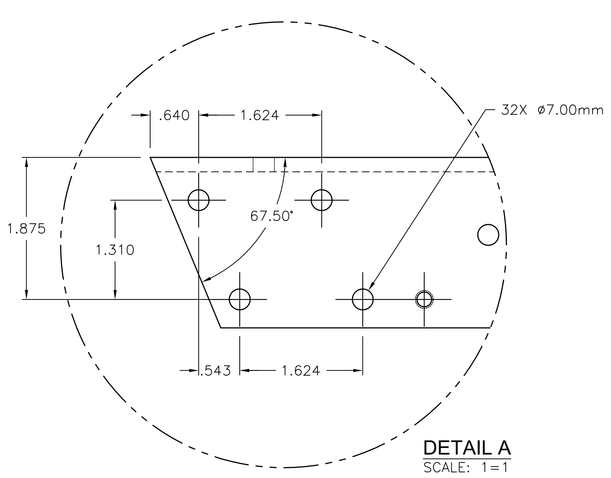

DETAIL A
SCALE: 1=1

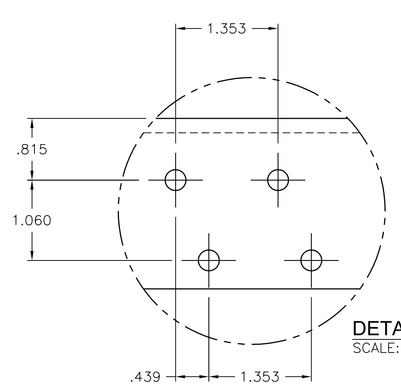

DETAIL B
SCALE: 1=1

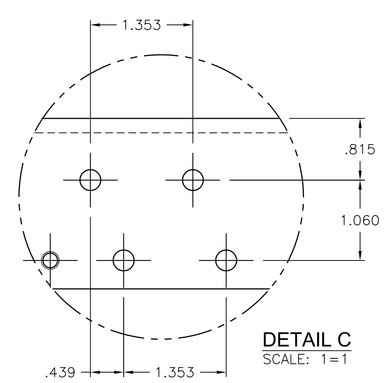

DETAIL C
SCALE: 1=1

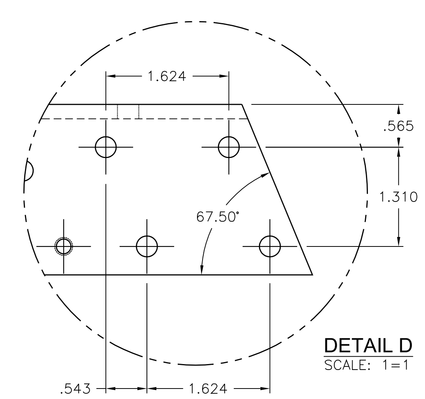

DETAIL D
SCALE: 1=1

NOTES:

1. ALL DIMENSIONED HOLE TYPE FEATURES ARE PRODUCED IN BOTH FLANGES OF C–CHANNEL.

MATERIAL: AL 6061–T6 ALUMINUM ASSOCIATION STANDARD CHANNEL, C54 X 2.33	UNLESS OTHERWISE SPECIFIED • DIMENSIONS ARE IN INCHES • TOLERANCES ARE AS FOLLOWS:		BARTOSZEK ENGINEERING 818 WEST DOWNER PLACE AURORA, IL 60506–4904
	FRACTIONS	±1/32	
	DECIMALS	.XX ±.02 .XXX ±.005	PHENIX RPC UPGRADE RPC3 FINAL DESIGN RPC3 OCTANT C–CHANNEL
NEXT ASSEMBLY: PHENIX–E–0055, E–0056	ANGLES	±0°30'	
	SURFACE FINISH	125 MAX. ALL MACHINED SURFACES	
ORIGINATOR: L. BARTOSZEK	• BREAK ALL SHARP EDGES. • DO NOT SCALE DWG. • DIMENSIONING IN ACCORD WITH ANSI Y14.5 STANDARDS.		
DRAWN BY: C.J. DAURER/L.B. 8/21/08			
CHECKED			
APPROVED			

SCALE	PROJECT NO.	SIZE	DRAWING NO.	SHEET NO.	REV
1=4		E	PHENIX–E–0058	1 of 1	A