REV.	REVISION DESCRIPTION	DRAWN BY	DATE
		APPROVED	DATE

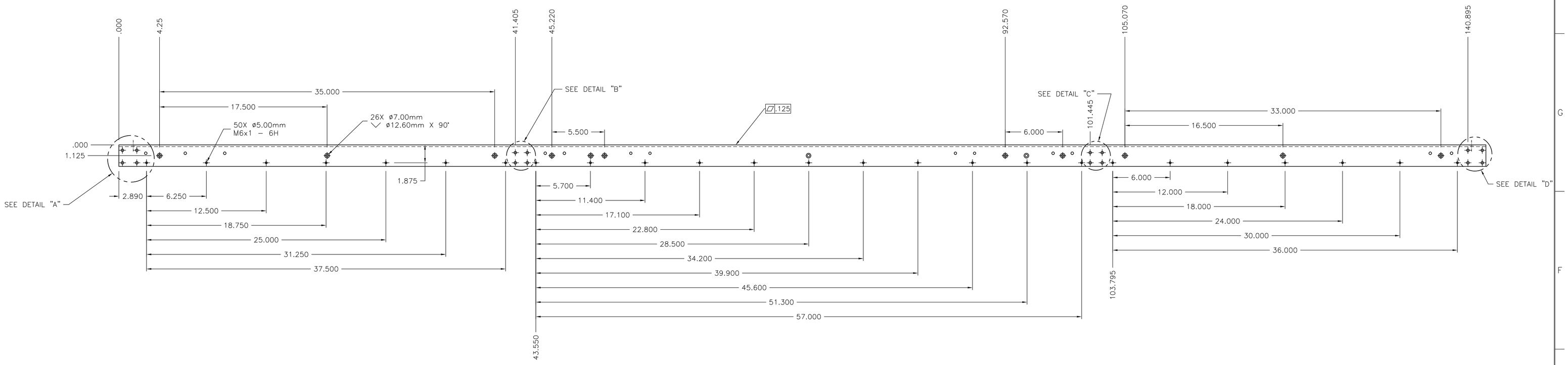

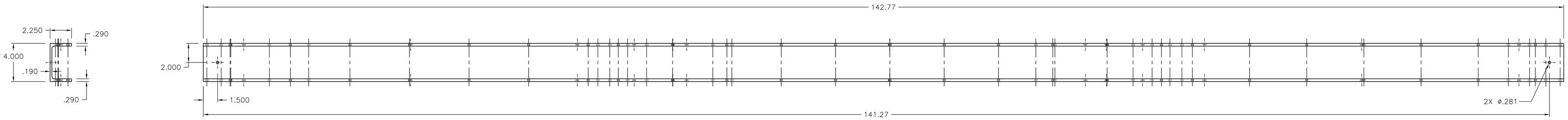

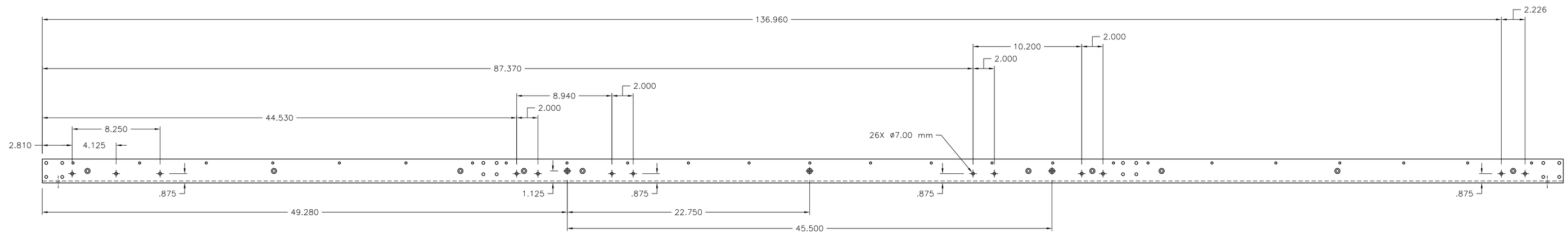

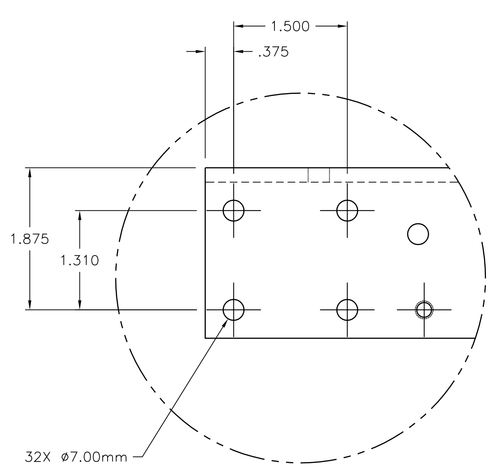

DETAIL A
SCALE: 1=1

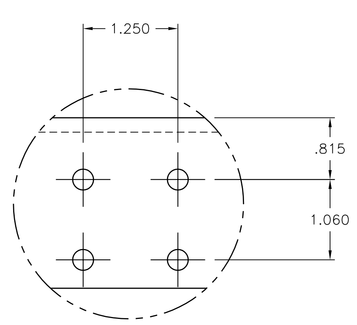

DETAIL B
SCALE: 1=1

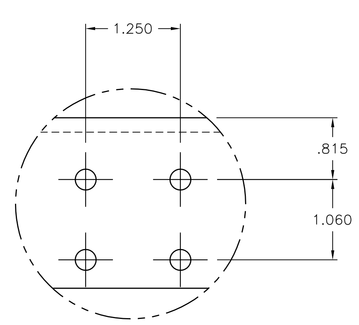

DETAIL C
SCALE: 1=1

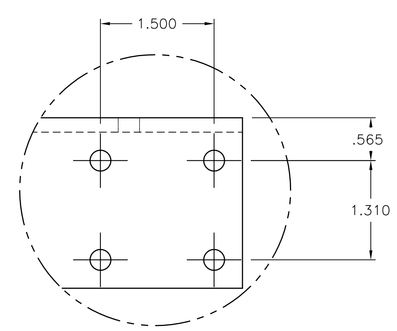

DETAIL D
SCALE: 1=1

NOTES:

1. ALL DIMENSIONED HOLE TYPE FEATURES ARE PRODUCED IN BOTH FLANGES OF C-CHANNEL.

MATERIAL: AL 6061-T6, ALUMINUM ASSOCIATION STANDARD CHANNEL, C54 X 2.33	UNLESS OTHERWISE SPECIFIED • DIMENSIONS ARE IN INCHES • TOLERANCES ARE AS FOLLOWS:	BARTOSZEK ENGINEERING, 818 WEST DOWNER PLACE, AURORA, IL 60506-4904
NEXT ASSEMBLY: PHENIX-E-0055, E-0056	FRACTIONS ±1/32; DECIMALS .XX ±.02, .XXX ±.005; ANGLES ±0°30'; SURFACE FINISH 125 MAX. ALL MACHINED SURFACES	PHENIX RPC UPGRADE, RPC3 FINAL DESIGN, RPC3 HALF OCTANT C-CHANNEL
ORIGINATOR: L. BARTOSZEK	• BREAK ALL SHARP EDGES. • DO NOT SCALE DWG. • DIMENSIONING IN ACCORD WITH ANSI Y14.5 STANDARDS.	
DRAWN BY: C.J. DAURER/L.B. 8/21/08		
CHECKED		
APPROVED		

SCALE	PROJECT NO.	SIZE	DRAWING NO.	SHEET NO.	REV
1=4		E	PHENIX-E-0057	1 of 1	–