REV.	REVISION DESCRIPTION	DRAWN BY	DATE
		APPROVED	DATE
A	UPDATED VIEWS TO SHOW UPDATED PARTS. ADDED ITEM 38, REDUCED QUANTITY OF ITEM 9	C.J. DAURER	10/22/08

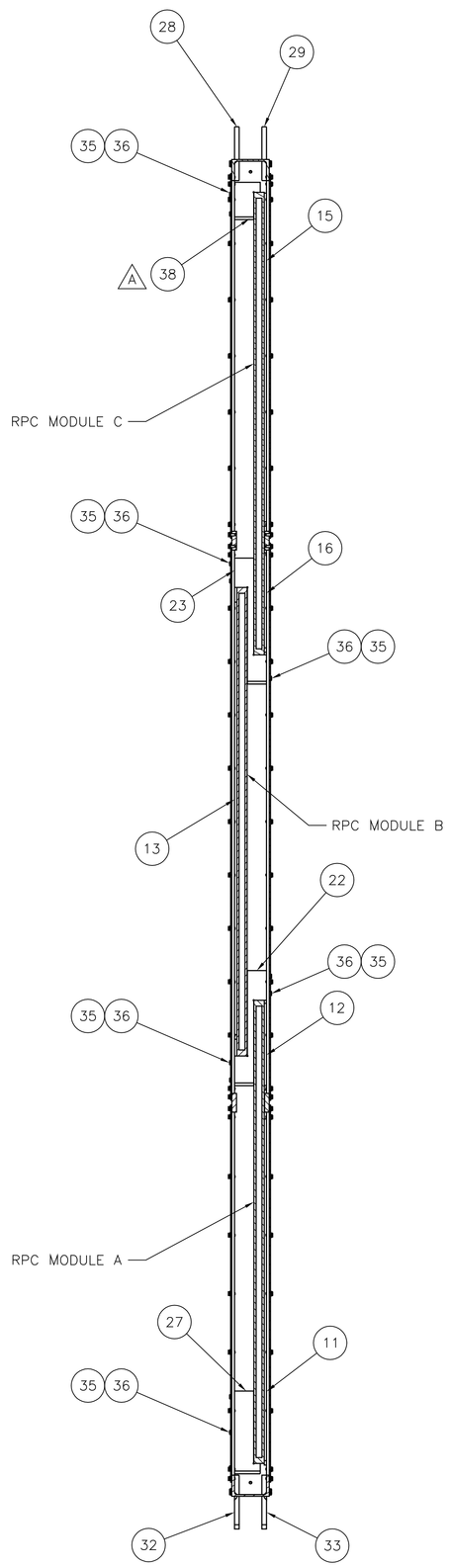

SECTION A-A

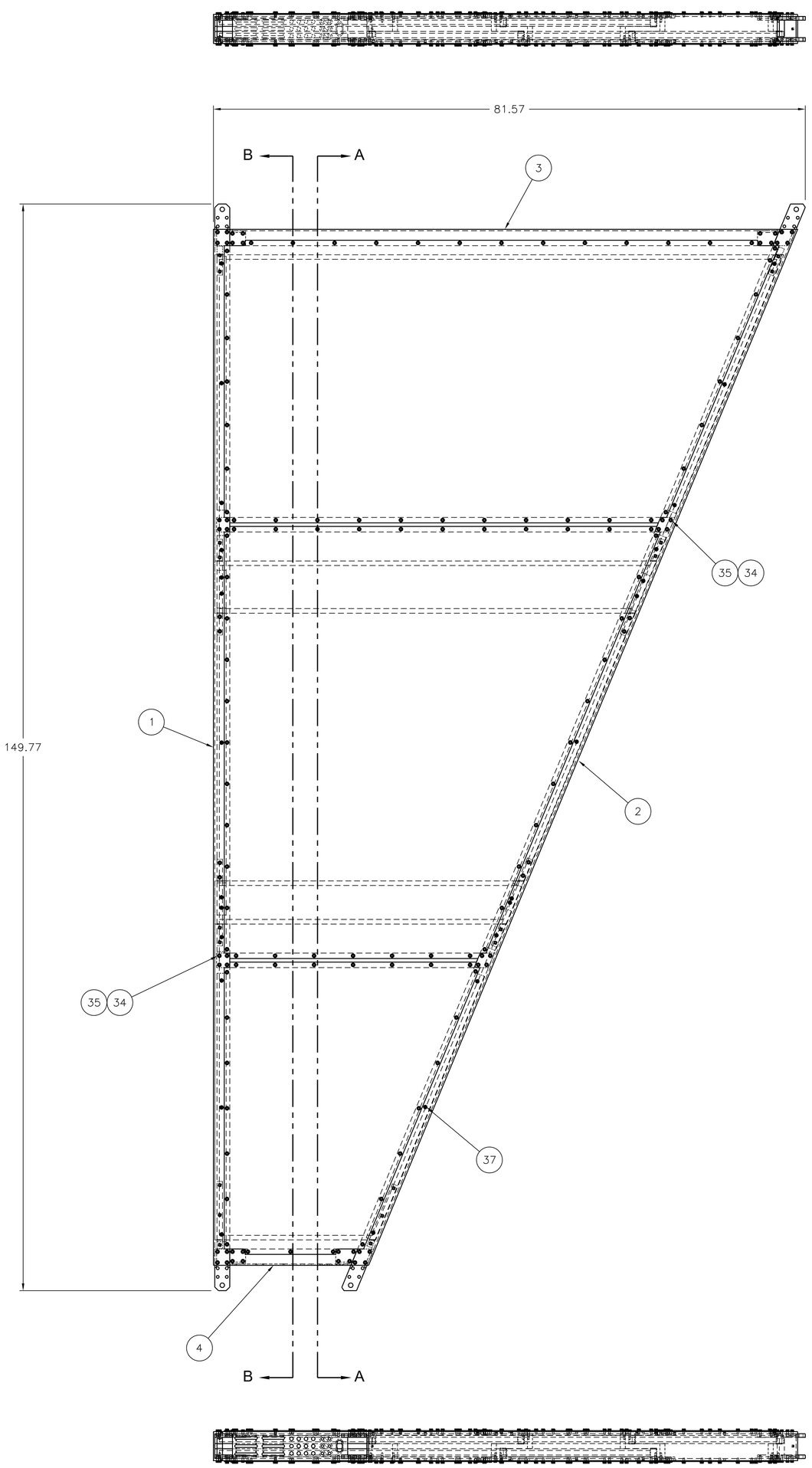

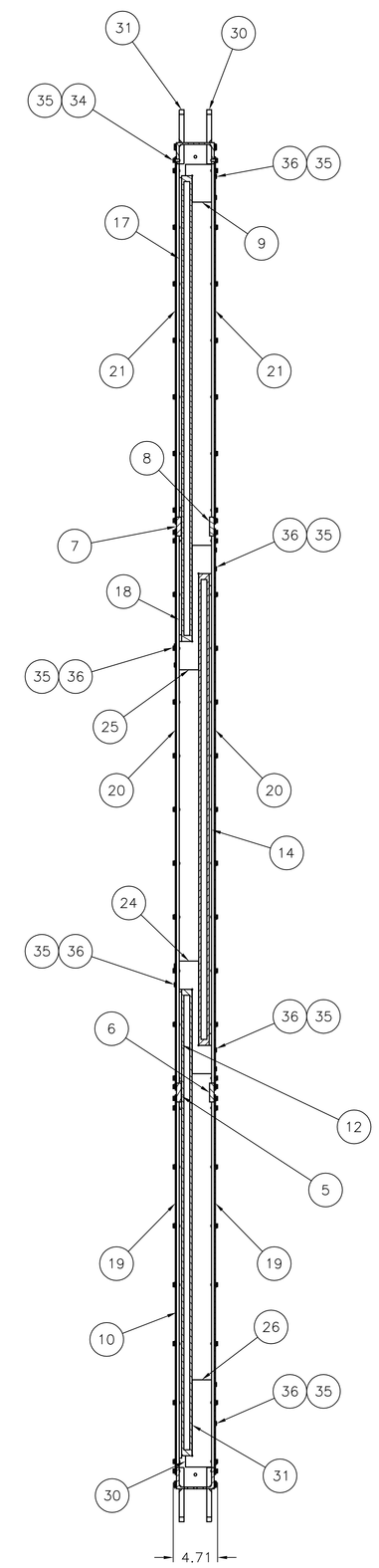

SECTION B-B

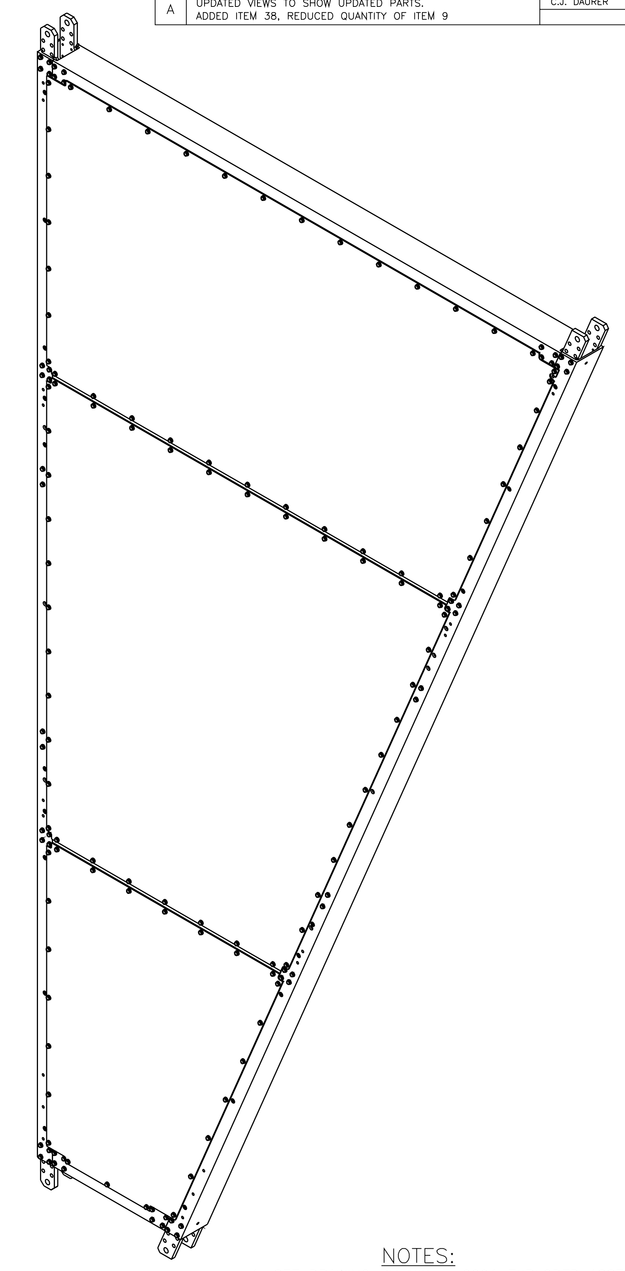

NOTES:

1. SEE DRAWING PHENIX-E-0091 EXPLODED ASSEMBLY (REFERENCE ONLY).

ITEM	PART NO.	DESCRIPTION OR SIZE	QTY.
A 38	PHENIX-C-0094	RPC3 LARGE END ANGLED BUMPER-MIR	1
37	PURCHASE	M6 X 1.0 X 13LG CROSS RECESSED FLAT HEAD SCREW, SS	26
36	PURCHASE	M6 X 1.0 X 20LG HHCS, SS	90
35	PURCHASE	M6 NARROW FLAT WASHER, SS	328
34	PURCHASE	M6 X 1.0 X 14LG HHCS, SS	238
33	PHENIX-C-0090	RPC3 CORNER BLOCK ANGLED INNER-LEFT	1
32	PHENIX-C-0089	RPC3 CORNER BLOCK ANGLED INNER-RIGHT	1
31	PHENIX-C-0088	RPC3 CORNER BLOCK STRAIGHT-LEFT DETAIL	2
30	PHENIX-C-0087	RPC3 CORNER BLOCK STRAIGHT DETAIL	2
29	PHENIX-C-0086	RPC3 CORNER BLOCK ANGLED OUTER LEFT DETAIL	1
28	PHENIX-C-0085	RPC3 CORNER BLOCK ANGLED OUTER RIGHT DETAIL	1
27	PHENIX-C-0084	RPC3 SMALL END BUMPER-ANGLED-LEFT DETAIL	1
26	PHENIX-C-0082	RPC3 SMALL END STRAIGHT BUMPER DETAIL	1
25	PHENIX-C-0081	RPC3 S ALIGNMENT BRACKET-BC DETAIL	1
24	PHENIX-C-0080	RPC3 S ALIGNMENT BRACKET DETAIL	1
23	PHENIX-E-0079	RPC3 S ALIGNMENT BRACKET ANGLED-BC DETAIL	1
22	PHENIX-E-0078	RPC3 S ALIGNMENT BRACKET ANGLED-AB DETAIL	1
21	PHENIX-E-0077	RPC3 MOD C COVER PLATE DETAIL	2
20	PHENIX-E-0076	RPC3 MOD B COVER PLATE DETAIL	2
19	PHENIX-E-0075	RPC3 MOD A COVER PLATE DETAIL	2
18	PHENIX-B-0074	RPC3 MOD C RECT SHIM-2 DETAIL	1
17	PHENIX-D-0073	RPC3 MOD C RECT SHIM DETAIL	1
16	PHENIX-B-0072	RPC3 MOD C ANGLED SHIM-2 DETAIL	1
15	PHENIX-D-0071	RPC3 MOD C ANGLED SHIM-1 DETAIL	1
14	PHENIX-D-0070	RPC3 MOD B RECT SHIM DETAIL	1
13	PHENIX-D-0069	RPC3 MOD B ANGLED SHIM DETAIL	1
12	PHENIX-B-0068	RPC3 MOD A RECT SHIM-2 DETAIL	2
11	PHENIX-D-0067	RPC3 MOD A RECT SHIM DETAIL	1
10	PHENIX-E-0066	RPC3 MOD A ANGLED SHIM DETAIL	1
9	PHENIX-C-0065	RPC3 LARGE END STRAIGHT BUMPER DETAIL	1
8	PHENIX-E-0064	RPC3 LONG ARM BC-LEFT DETAIL	1
7	PHENIX-E-0063	RPC3 LONG ARM BC DETAIL	1
6	PHENIX-D-0062	RPC3 LONG ARM AB-LEFT DETAIL	1
5	PHENIX-D-0061	RPC3 LONG ARM AB DETAIL	1
4	PHENIX-E-0060	RPC3 INNER BULKHEAD CHANNEL DETAIL	1
3	PHENIX-E-0059	RPC3 OUTER BULKHEAD CHANNEL DETAIL	1
2	PHENIX-E-0058	RPC3 OCTANT C-CHANNEL	1
1	PHENIX-E-0057	RPC3 HALF OCTANT C-CHANNEL	1

PARTS LIST

MATERIAL: SEE BOM	UNLESS OTHERWISE SPECIFIED • DIMENSIONS ARE IN INCHES • TOLERANCES ARE AS FOLLOWS:	BARTOSZEK ENGINEERING 818 WEST DOWNER PLACE AURORA, IL 60506-4904
NEXT ASSEMBLY	FRACTIONS ±1/32 DECIMALS .XX ±.02, .XXX ±.005 ANGLES ±0°30'	PHENIX RPC UPGRADE RPC3 FINAL DESIGN TOP RIGHT HAND RPC3 ASSEMBLY
ORIGINATOR: L. BARTOSZEK	SURFACE FINISH 125 √ MAX. ALL MACHINED SURFACES	
DRAWN BY: C.J. DAURER/L.B. 8/21/08	• BREAK ALL SHARP EDGES. • DO NOT SCALE DWG. • DIMENSIONING IN ACCORD WITH ANSI Y14.5 STANDARDS.	
CHECKED		
APPROVED		

SCALE	PROJECT NO.	SIZE	DRAWING NO.	SHEET NO.	REV
1=8		E	PHENIX-E-0055	1 of 1	A