REV.	REVISION DESCRIPTION	DRAWN BY	DATE
		APPROVED	DATE

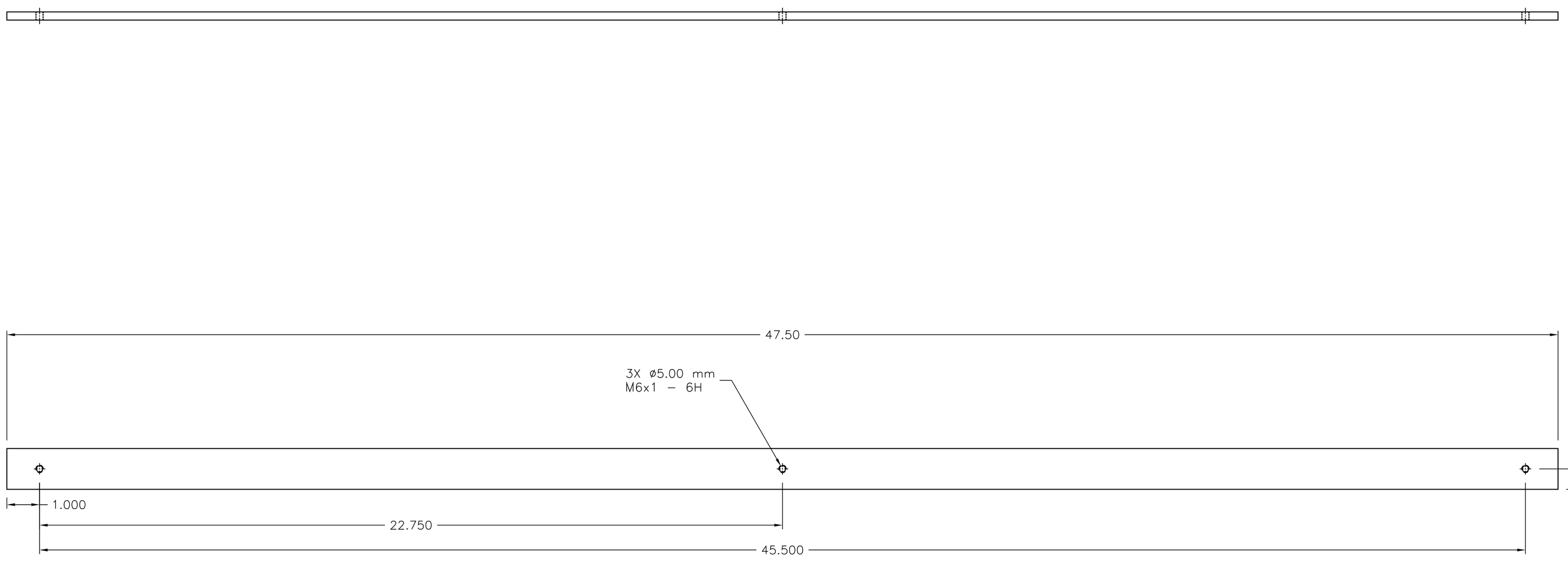

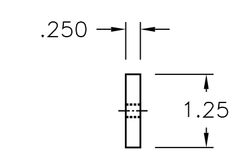

MATERIAL	AL 6061–T6	
NEXT ASSEMBLY	PHENIX–E–0055, E–0056	
ORIGINATOR	L. BARTOSZEK	
DRAWN BY	C.J. DAURER/L.B.	8/21/08
CHECKED		
APPROVED		

UNLESS OTHERWISE SPECIFIED
- DIMENSIONS ARE IN INCHES
- TOLERANCES ARE AS FOLLOWS:

FRACTIONS	±1/32
DECIMALS	.XX ±.02 .XXX ±.005
ANGLES	±0°30'
SURFACE FINISH	125 √ MAX. ALL MACHINED SURFACES

- BREAK ALL SHARP EDGES.
- DO NOT SCALE DWG.
- DIMENSIONING IN ACCORD WITH ANSI Y14.5 STANDARDS.

BARTOSZEK ENGINEERING
818 WEST DOWNER PLACE
AURORA, IL 60506–4904

PHENIX RPC UPGRADE
RPC3 FINAL DESIGN
RPC3 MOD B RECT SHIM DETAIL

SCALE	PROJECT NO.	SIZE	DRAWING NO.	SHEET NO.	REV
1=2		D	PHENIX–D–0070	1 of 1	–