REV.	REVISION DESCRIPTION	DRAWN BY	DATE
		APPROVED	DATE
A	CHANGED WIDTH OF STEP	C.J. DAURER	10/22/08

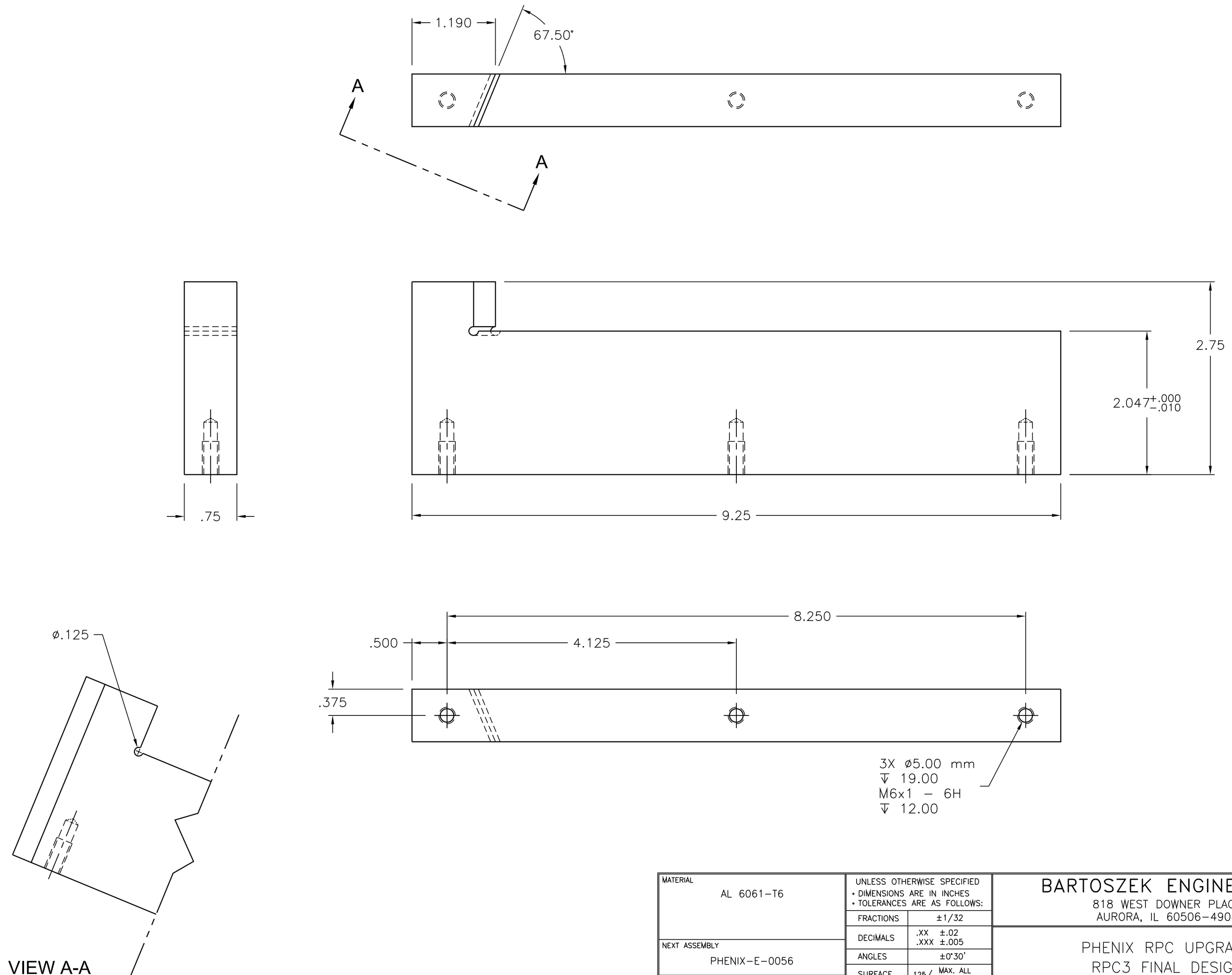

MATERIAL		
AL 6061–T6		
NEXT ASSEMBLY		
PHENIX–E–0056		
ORIGINATOR	L. BARTOSZEK	
DRAWN BY	C.J. DAURER/L.B.	8/21/08
CHECKED		
APPROVED		

UNLESS OTHERWISE SPECIFIED
- DIMENSIONS ARE IN INCHES
- TOLERANCES ARE AS FOLLOWS:

FRACTIONS	±1/32
DECIMALS	.XX ±.02 .XXX ±.005
ANGLES	±0°30'
SURFACE FINISH	125 √ MAX. ALL MACHINED SURFACES

- BREAK ALL SHARP EDGES.
- DO NOT SCALE DWG.
- DIMENSIONING IN ACCORD WITH ANSI Y14.5 STANDARDS.

BARTOSZEK ENGINEERING
818 WEST DOWNER PLACE
AURORA, IL 60506–4904

PHENIX RPC UPGRADE
RPC3 FINAL DESIGN
RPC3 SMALL END BUMPER–ANGLED DETAIL

SCALE	PROJECT NO.	SIZE	DRAWING NO.	SHEET NO.	REV
1=1		C	PHENIX–C–0083	1 of 1	A