REV.	REVISION DESCRIPTION	DRAWN BY	DATE
		APPROVED	DATE
A	CHANGED WIDTH OF STEP	C.J. DAURER	10/22/08

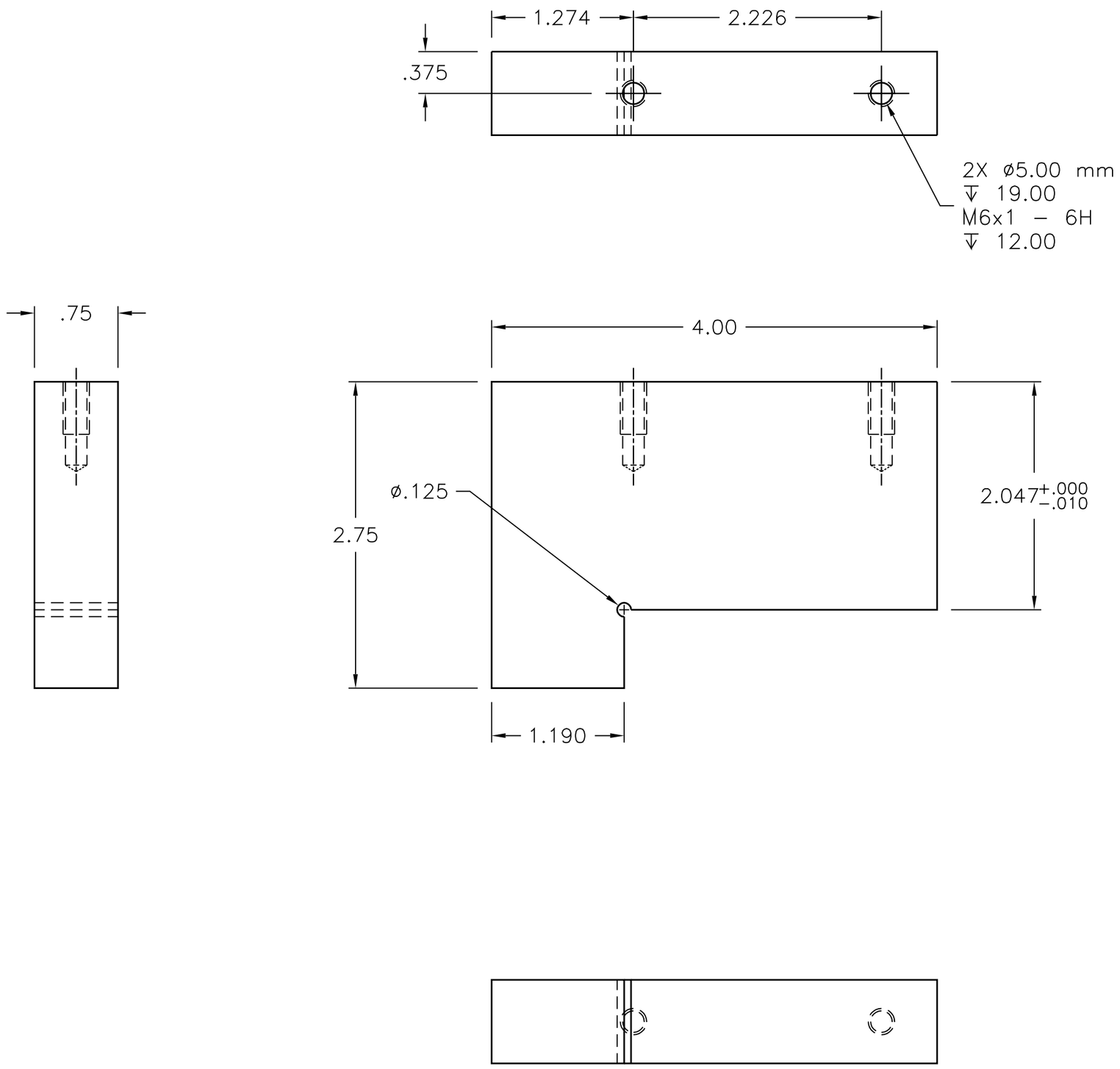

MATERIAL		
AL 6061-T6		
NEXT ASSEMBLY		
PHENIX-E-0055, E-0056		
ORIGINATOR	L. BARTOSZEK	
DRAWN BY	C.J. DAURER/L.B.	8/21/08
CHECKED		
APPROVED		

UNLESS OTHERWISE SPECIFIED
- DIMENSIONS ARE IN INCHES
- TOLERANCES ARE AS FOLLOWS:

FRACTIONS	±1/32
DECIMALS	.XX ±.02 .XXX ±.005
ANGLES	±0°30'
SURFACE FINISH	125√ MAX. ALL MACHINED SURFACES

- BREAK ALL SHARP EDGES.
- DO NOT SCALE DWG.
- DIMENSIONING IN ACCORD WITH ANSI Y14.5 STANDARDS.

BARTOSZEK ENGINEERING
818 WEST DOWNER PLACE
AURORA, IL 60506-4904

PHENIX RPC UPGRADE
RPC3 FINAL DESIGN
RPC3 LARGE END STRAIGHT BUMPER DETAIL

SCALE	PROJECT NO.	SIZE	DRAWING NO.	SHEET NO.	REV
1=1		C	PHENIX-C-0065	1 of 1	A