| REV. | REVISION DESCRIPTION | DRAWN BY | DATE |
|---|---|---|---|
| | | APPROVED | DATE |

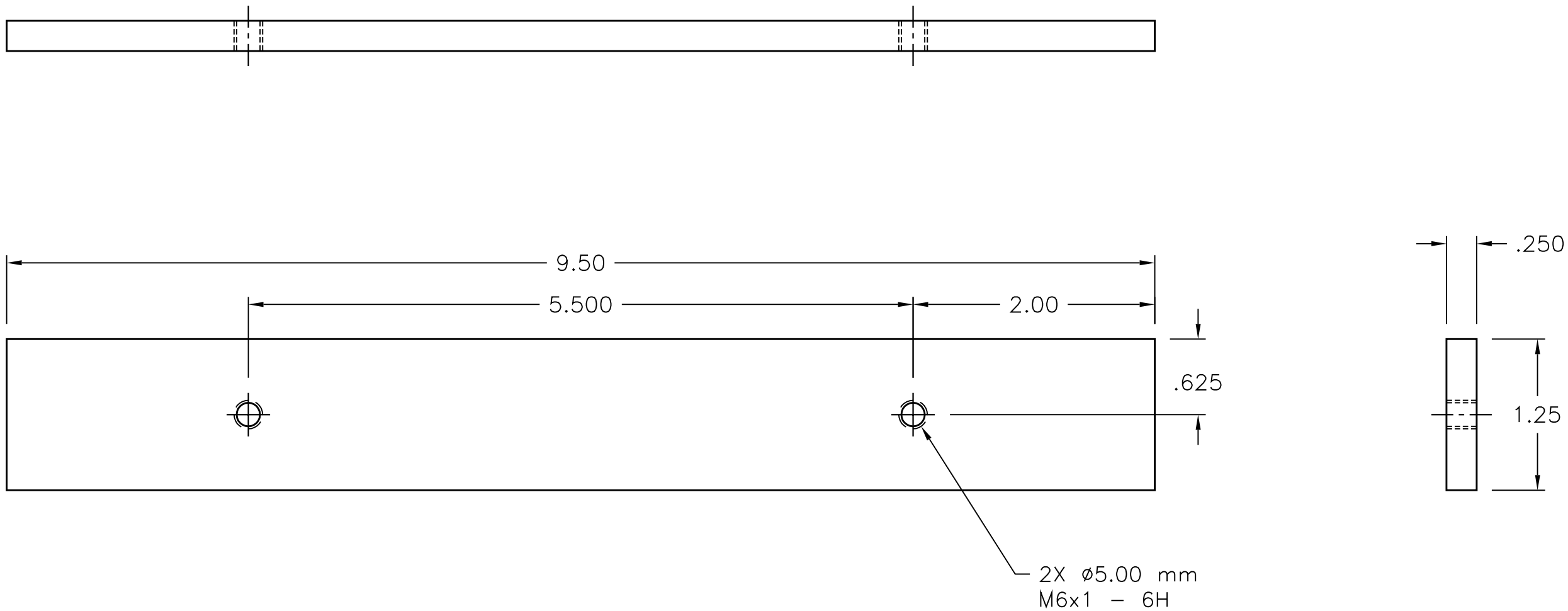


| MATERIAL | | |
|---|---|---|
| AL 6061–T6 | | |
| NEXT ASSEMBLY | | |
| PHENIX–E–0055, E–0056 | | |
| ORIGINATOR | L. BARTOSZEK | |
| DRAWN BY | C.J. DAURER/L.B. | 8/21/08 |
| CHECKED | | |
| APPROVED | | |

UNLESS OTHERWISE SPECIFIED
- DIMENSIONS ARE IN INCHES
- TOLERANCES ARE AS FOLLOWS:

| | |
|---|---|
| FRACTIONS | ±1/32 |
| DECIMALS | .XX ±.02<br>.XXX ±.005 |
| ANGLES | ±0°30' |
| SURFACE FINISH | 125 √ MAX. ALL MACHINED SURFACES |

- BREAK ALL SHARP EDGES.
- DO NOT SCALE DWG.
- DIMENSIONING IN ACCORD WITH ANSI Y14.5 STANDARDS.

BARTOSZEK ENGINEERING
818 WEST DOWNER PLACE
AURORA, IL 60506–4904

PHENIX RPC UPGRADE
RPC3 FINAL DESIGN
RPC3 MOD A RECT SHIM–2 DETAIL

| SCALE | PROJECT NO. | SIZE | DRAWING NO. | SHEET NO. | REV |
|---|---|---|---|---|---|
| 1=1 | | B | PHENIX–B–0068 | 1 of 1 | – |