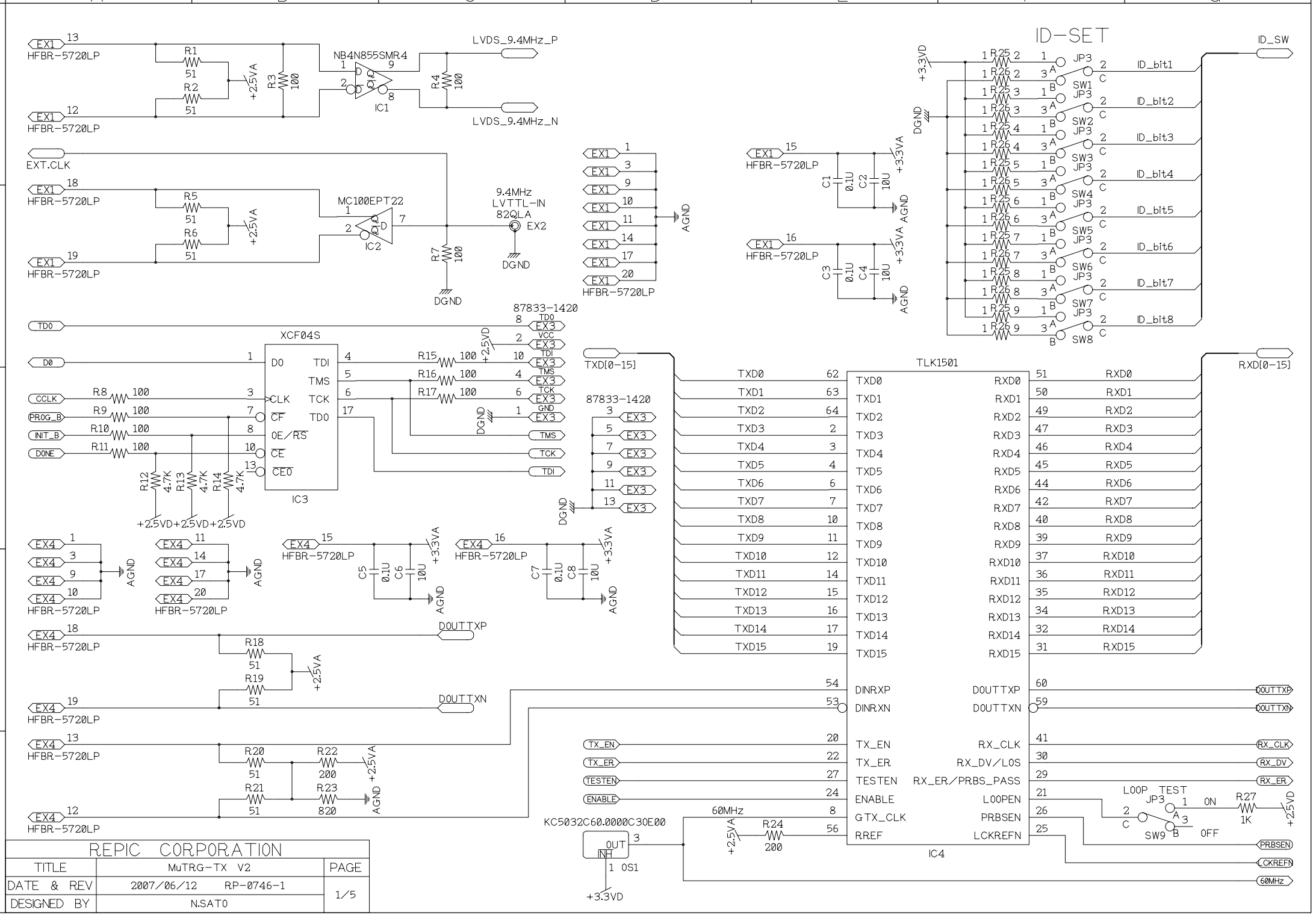
ID-SET
NB4N855SMR4
IC1
LVDS_9.4MHz_P
LVDS_9.4MHz_N
EXT.CLK
MC100EPT22
IC2
9.4MHz
LVTTL-IN
82QLA
EX2
DGND
AGND
HFBR-5720LP
87833-1420
XCF04S
IC3
TLK1501
IC4
TXD[0-15]
RXD[0-15]
DOUTTXP
DOUTTXN
TX_EN
TX_ER
TESTEN
ENABLE
RX_CLK
RX_DV
RX_ER
PRBSEN
LCKREFN
60MHz
KC5032C60.0000C30E00
OUT
INH
OS1
+3.3VD
+2.5VD
+2.5VA
+3.3VA
ID_SW
ID_bit1
ID_bit2
ID_bit3
ID_bit4
ID_bit5
ID_bit6
ID_bit7
ID_bit8
LOOP TEST
ON
OFF
REPIC CORPORATION
TITLE
MuTRG-TX V2
PAGE
DATE & REV
2007/06/12 RP-0746-1
1/5
DESIGNED BY
N.SATO

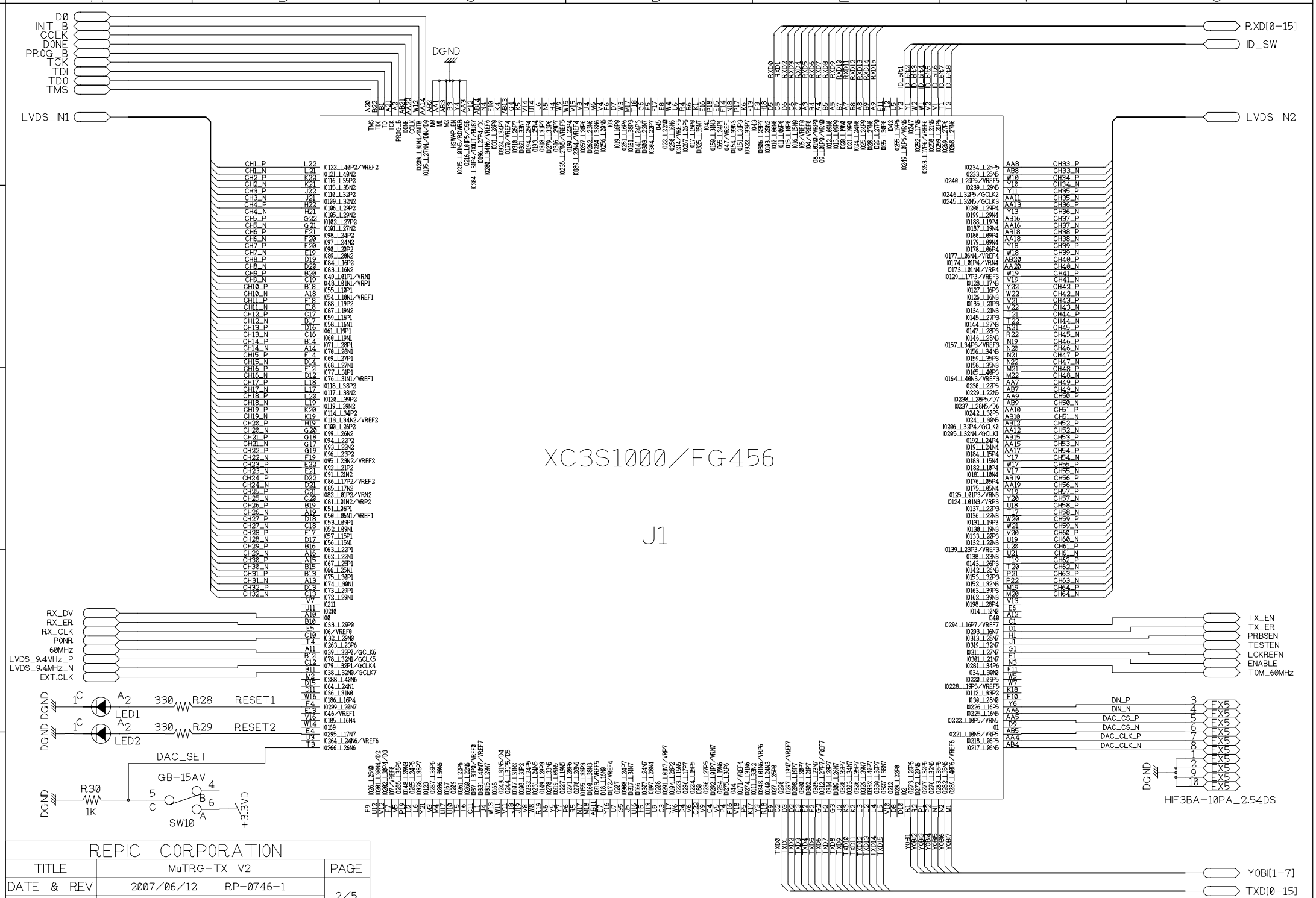

REPIC CORPORATION		
TITLE	MuTRG-TX V2	PAGE
DATE & REV	2007/06/12 R.P-0746-1	2/5
DESIGNED BY	N.SATO	

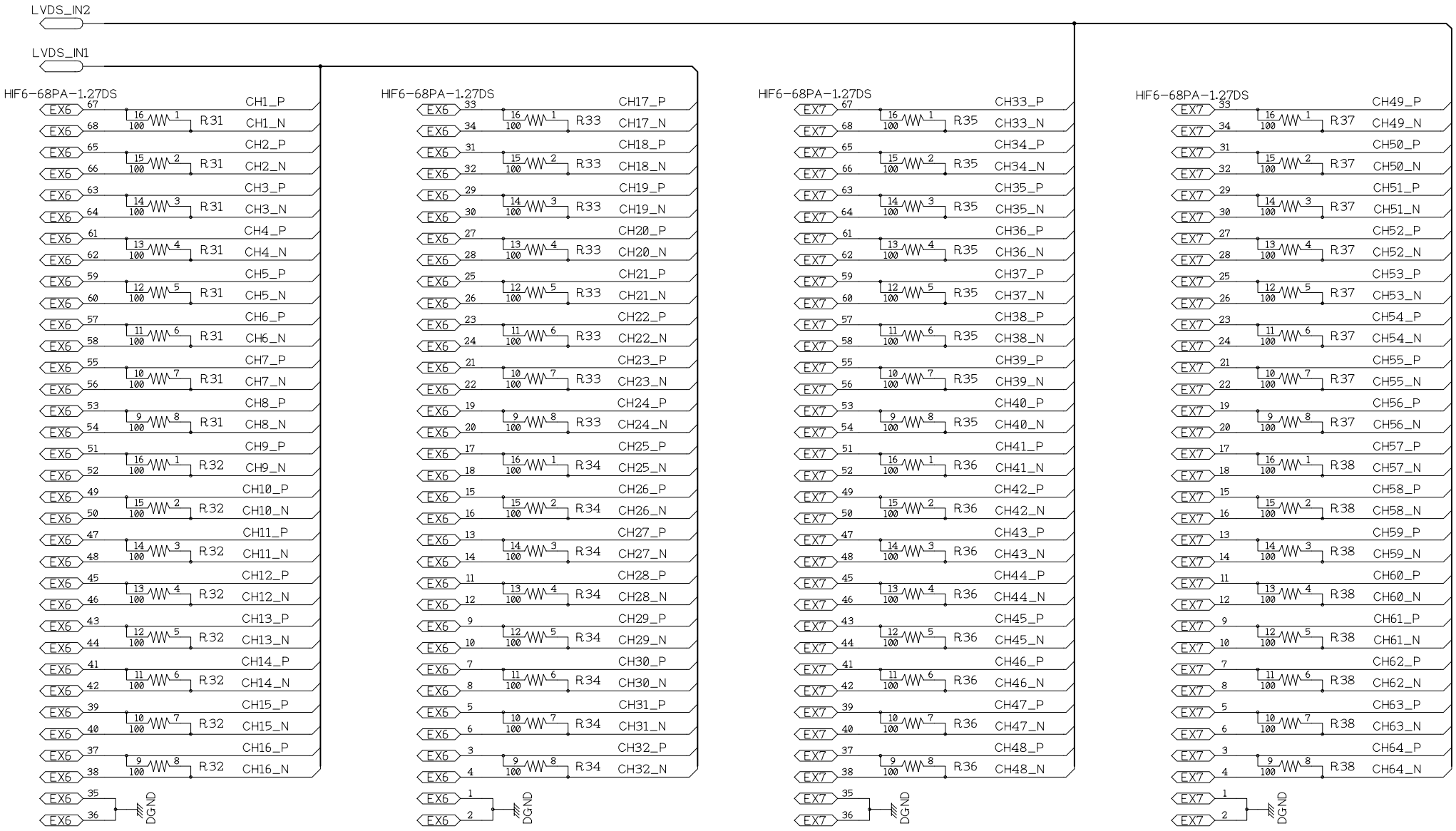

REPIC CORPORATION		
TITLE	MuTRG-TX V2	PAGE
DATE & REV	2007/06/12 RP-0746-1	3/5
DESIGNED BY	N.SATO	

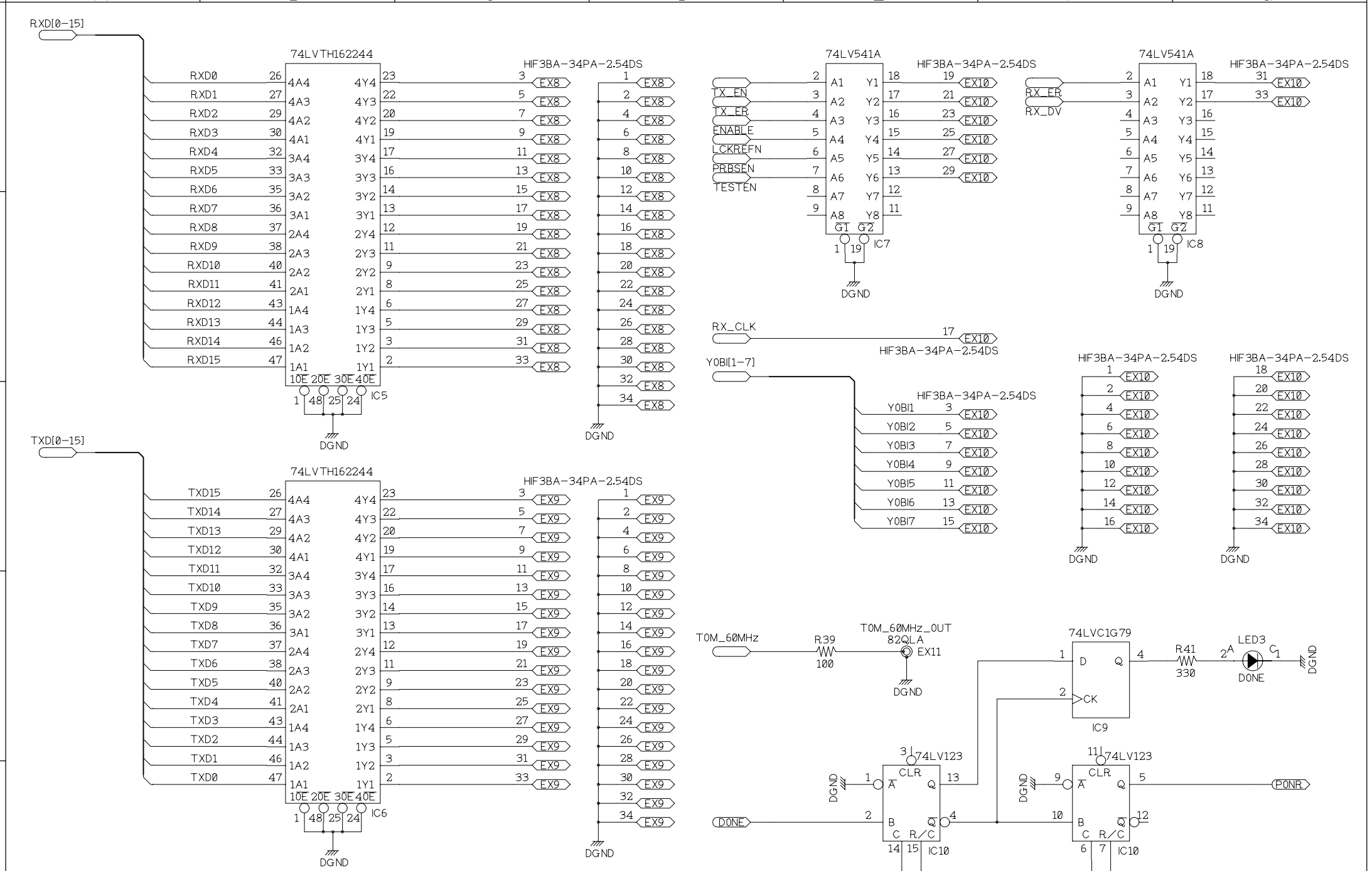

REPIC CORPORATION		
TITLE	MuTRG-TX V2	PAGE
DATE & REV	2007/06/12 RP-0746-1	4/5
DESIGNED BY	N.SATO	

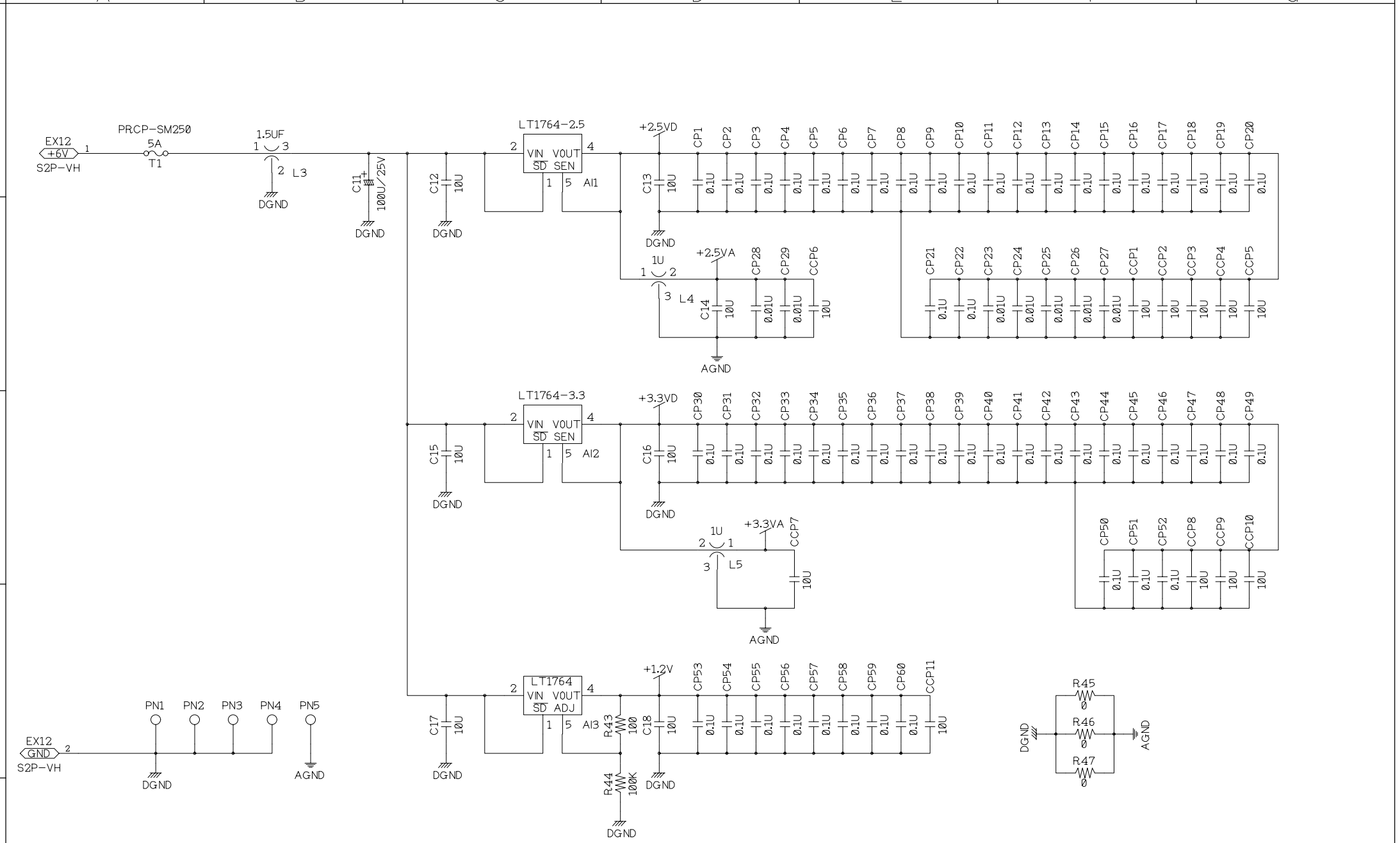

REPIC CORPORATION		
TITLE	MuTRG-TX V2	PAGE
DATE & REV	2007/06/12 RP-0746-1	5/5
DESIGNED BY	N.SATO	