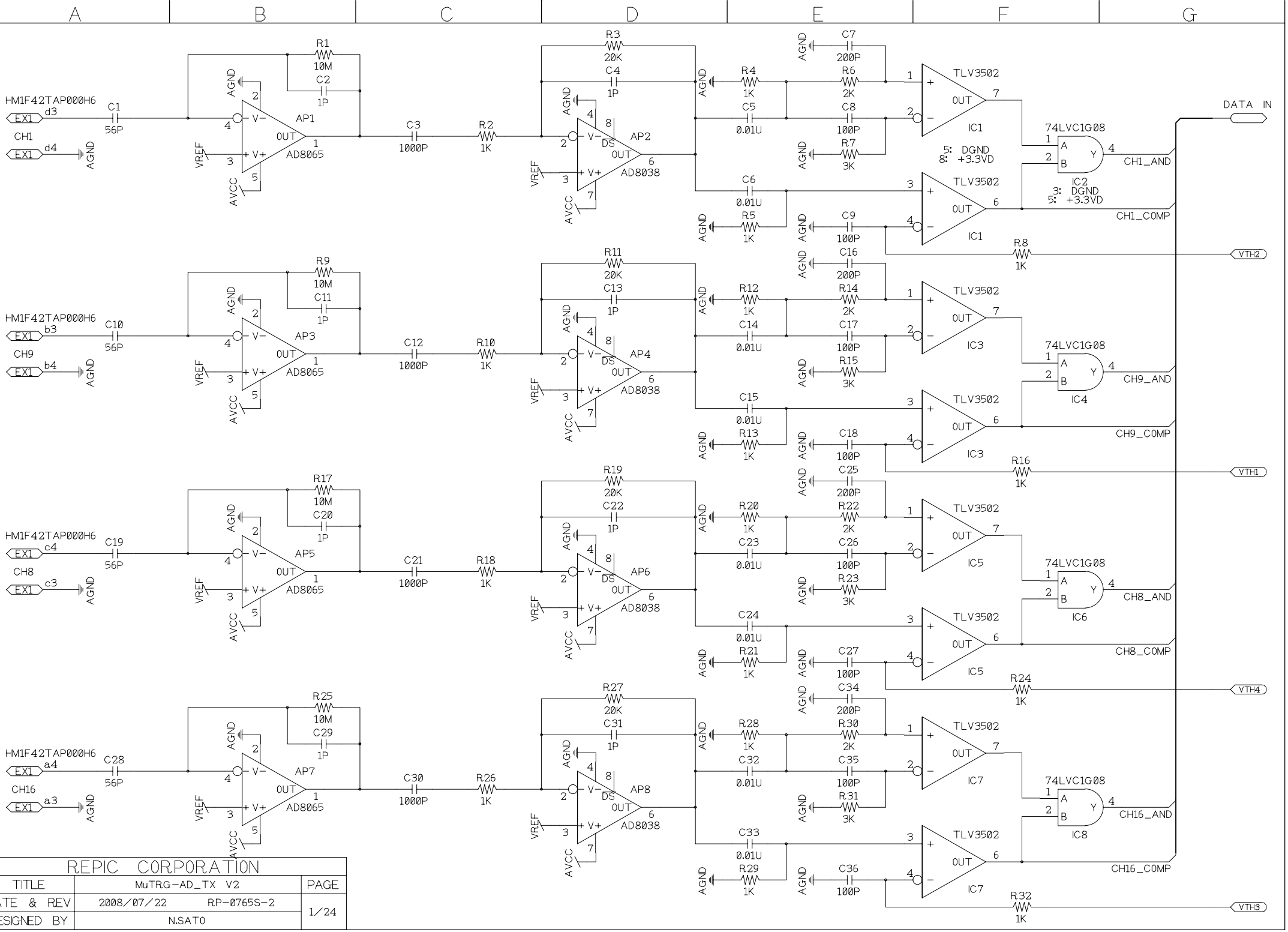
A
B
C
D
E
F
G
1
2
3
4
5
HM1F42TAP000H6
EX1
d3
CH1
d4
C1
56P
R1
10M
C2
1P
AP1
AD8065
C3
1000P
R2
1K
R3
20K
C4
1P
AP2
AD8038
R4
1K
C5
0.01U
R5
1K
C6
0.01U
C7
200P
R6
2K
R7
3K
C8
100P
C9
100P
TLV3502
IC1
5: DGND
8: +3.3VD
74LVC1G08
IC2
3: DGND
5: +3.3VD
DATA IN
CH1_AND
CH1_COMP
R8
1K
VTH2
HM1F42TAP000H6
b3
CH9
b4
C10
56P
R9
10M
C11
1P
AP3
AD8065
C12
1000P
R10
1K
R11
20K
C13
1P
AP4
AD8038
R12
1K
C14
0.01U
R13
1K
C15
0.01U
C16
200P
R14
2K
R15
3K
C17
100P
C18
100P
TLV3502
IC3
74LVC1G08
IC4
CH9_AND
CH9_COMP
R16
1K
VTH1
HM1F42TAP000H6
c4
CH8
c3
C19
56P
R17
10M
C20
1P
AP5
AD8065
C21
1000P
R18
1K
R19
20K
C22
1P
AP6
AD8038
R20
1K
C23
0.01U
R21
1K
C24
0.01U
C25
200P
R22
2K
R23
3K
C26
100P
C27
100P
TLV3502
IC5
74LVC1G08
IC6
CH8_AND
CH8_COMP
R24
1K
VTH4
HM1F42TAP000H6
a4
CH16
a3
C28
56P
R25
10M
C29
1P
AP7
AD8065
C30
1000P
R26
1K
R27
20K
C31
1P
AP8
AD8038
R28
1K
C32
0.01U
R29
1K
C33
0.01U
C34
200P
R30
2K
R31
3K
C35
100P
C36
100P
TLV3502
IC7
74LVC1G08
IC8
CH16_AND
CH16_COMP
R32
1K
VTH3
AGND
VREF
AVCC
REPIC CORPORATION
TITLE
MuTRG-AD_TX V2
PAGE
DATE & REV
2008/07/22 RP-0765S-2
1/24
DESIGNED BY
N.SATO

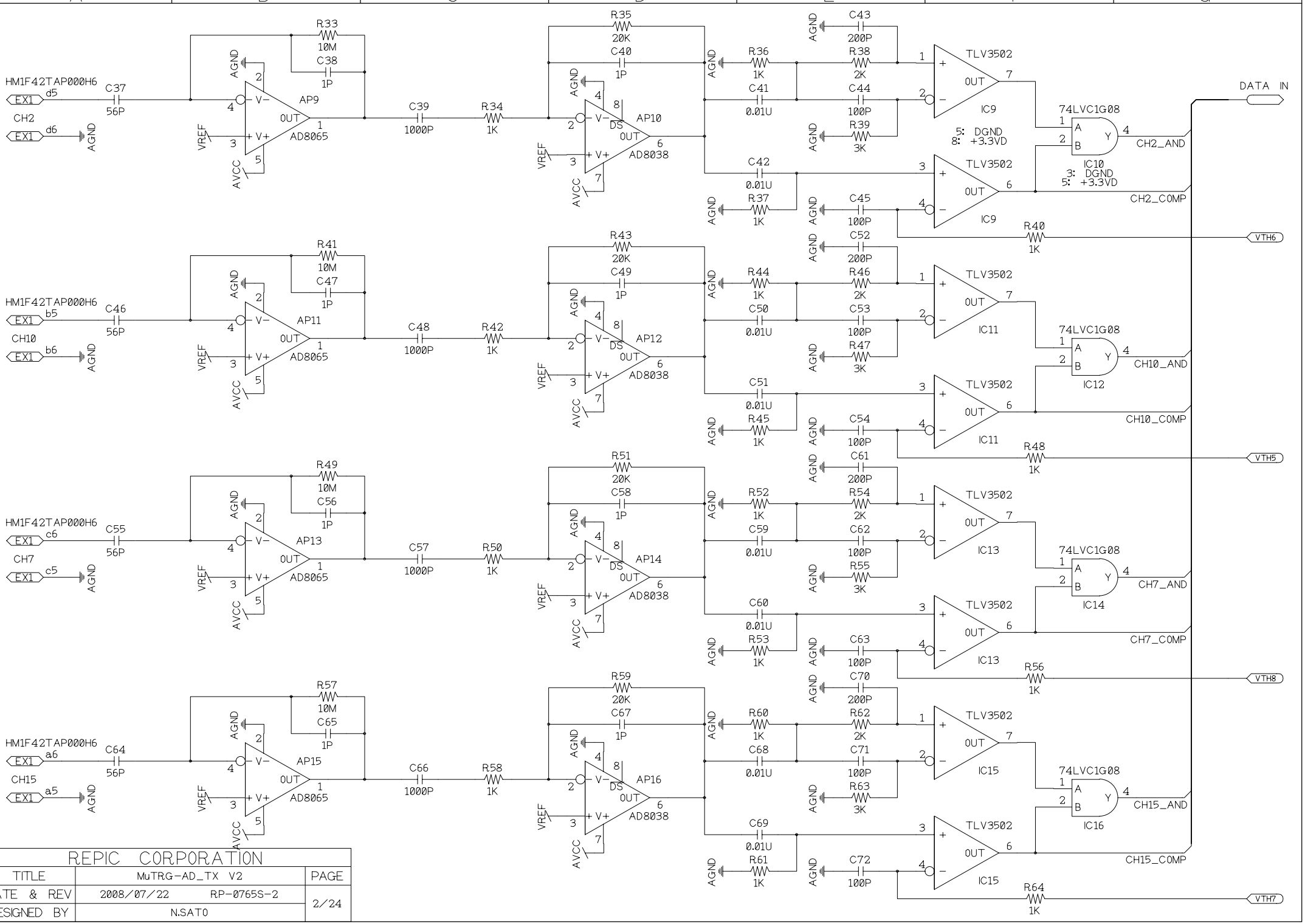

REPIC CORPORATION		
TITLE	MuTRG-AD_TX V2	PAGE
DATE & REV	2008/07/22 RP-0765S-2	2/24
DESIGNED BY	N.SATO	

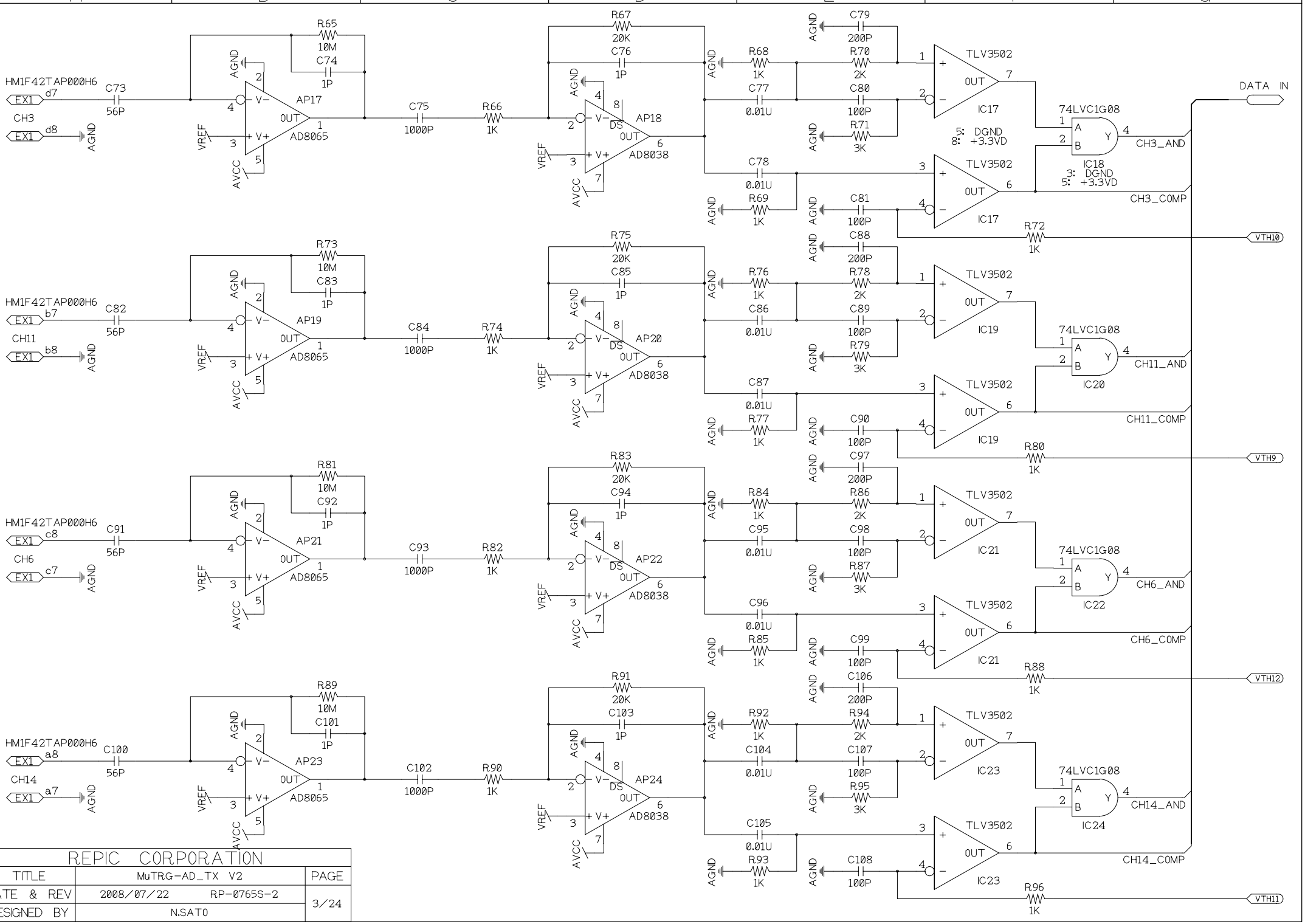

REPIC CORPORATION		
TITLE	MuTRG-AD_TX V2	PAGE
DATE & REV	2008/07/22 RP-0765S-2	3/24
DESIGNED BY	N.SATO	

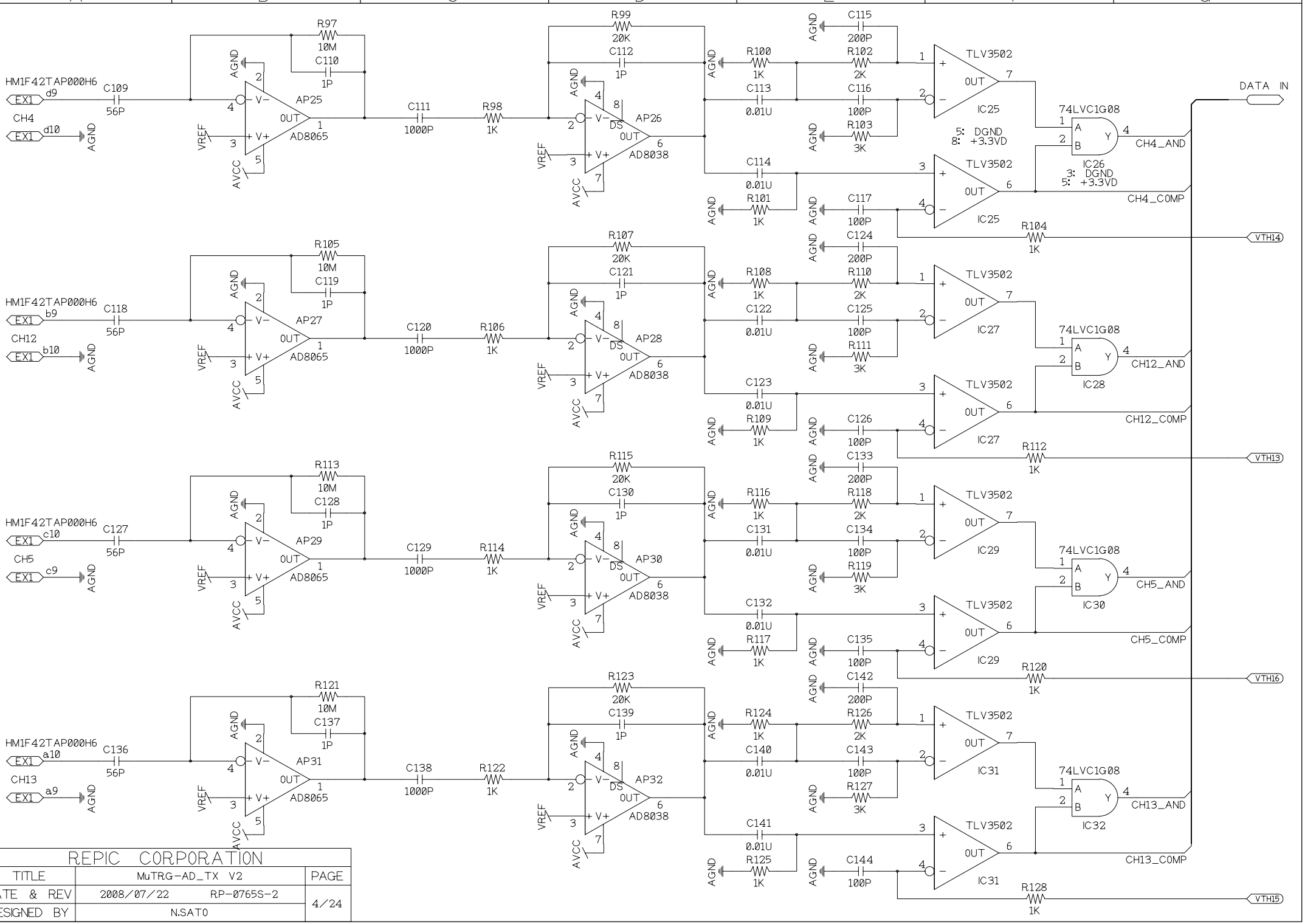
A
B
C
D
E
F
G
1
2
3
4
5
HM1F42TAP000H6
EX1
d9
CH4
d10
C109
56P
R97
10M
C110
1P
AP25
AD8065
C111
1000P
R98
1K
R99
20K
C112
1P
AP26
AD8038
R100
1K
C113
0.01U
R101
1K
C114
0.01U
C115
200P
R102
2K
R103
3K
C116
100P
C117
100P
IC25
TLV3502
74LVC1G08
IC26
5: DGND
8: +3.3VD
3: DGND
5: +3.3VD
DATA IN
CH4_AND
CH4_COMP
R104
1K
VTH14
HM1F42TAP000H6
b9
CH12
b10
C118
56P
R105
10M
C119
1P
AP27
AD8065
C120
1000P
R106
1K
R107
20K
C121
1P
AP28
AD8038
R108
1K
C122
0.01U
R109
1K
C123
0.01U
C124
200P
R110
2K
R111
3K
C125
100P
C126
100P
IC27
IC28
CH12_AND
CH12_COMP
R112
1K
VTH13
HM1F42TAP000H6
c10
CH5
c9
C127
56P
R113
10M
C128
1P
AP29
AD8065
C129
1000P
R114
1K
R115
20K
C130
1P
AP30
AD8038
R116
1K
C131
0.01U
R117
1K
C132
0.01U
C133
200P
R118
2K
R119
3K
C134
100P
C135
100P
IC29
IC30
CH5_AND
CH5_COMP
R120
1K
VTH16
HM1F42TAP000H6
a10
CH13
a9
C136
56P
R121
10M
C137
1P
AP31
AD8065
C138
1000P
R122
1K
R123
20K
C139
1P
AP32
AD8038
R124
1K
C140
0.01U
R125
1K
C141
0.01U
C142
200P
R126
2K
R127
3K
C143
100P
C144
100P
IC31
IC32
CH13_AND
CH13_COMP
R128
1K
VTH15
EX1
AGND
VREF
AVCC
V−
V+
OUT
DS
REPIC CORPORATION
TITLE
MuTRG-AD_TX V2
PAGE
DATE & REV
2008/07/22 RP-0765S-2
4/24
DESIGNED BY
N.SATO

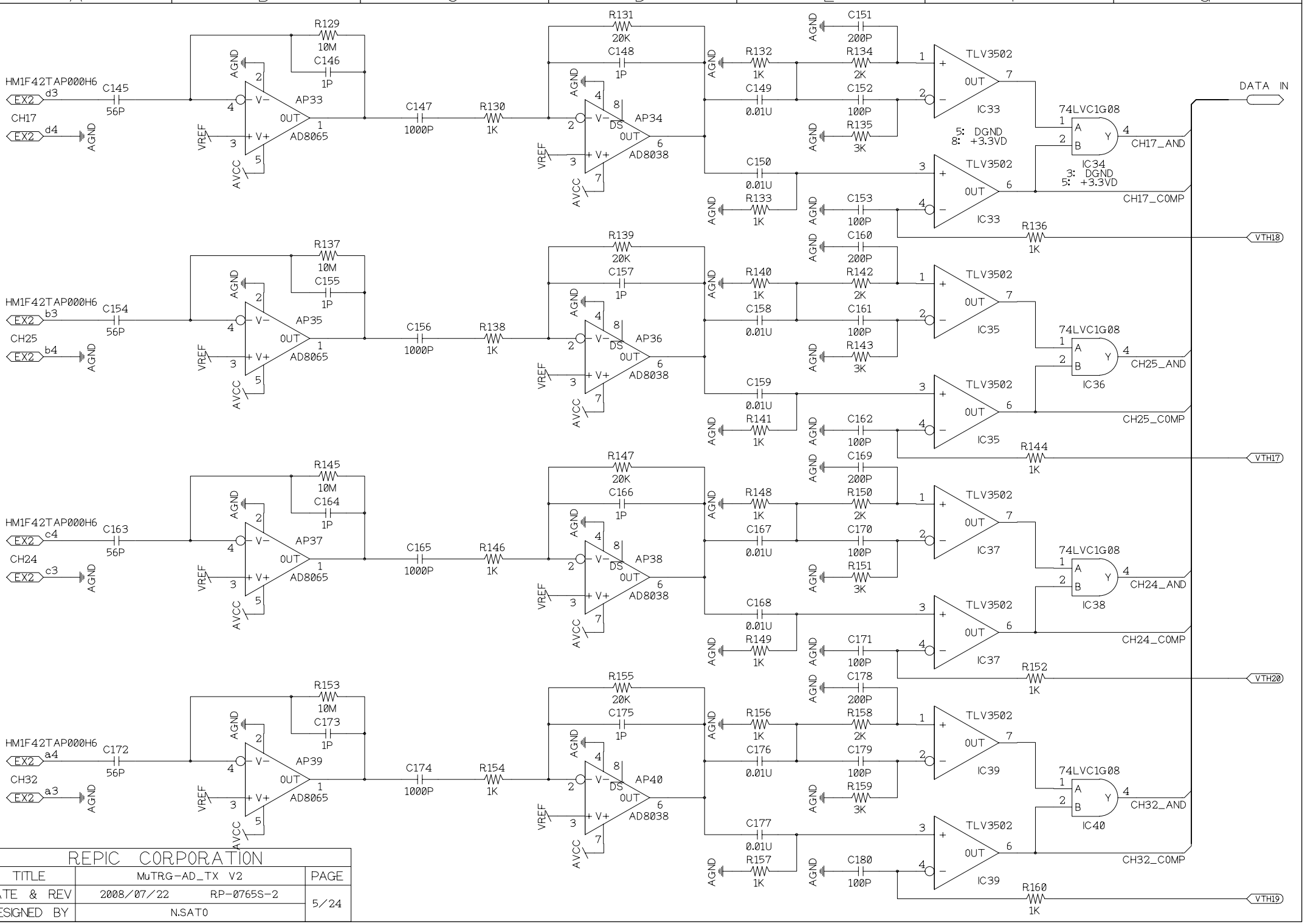
A
B
C
D
E
F
G
1
2
3
4
5
HM1F42TAP000H6
EX2
d3
CH17
d4
C145
56P
R129
10M
C146
1P
AP33
AD8065
C147
1000P
R130
1K
R131
20K
C148
1P
AP34
AD8038
R132
1K
R134
2K
C149
0.01U
R135
3K
C150
0.01U
R133
1K
C151
200P
C152
100P
C153
100P
TLV3502
IC33
74LVC1G08
IC34
5: DGND
8: +3.3VD
3: DGND
5: +3.3VD
DATA IN
CH17_AND
CH17_COMP
R136
1K
VTH18
HM1F42TAP000H6
b3
CH25
b4
C154
56P
R137
10M
C155
1P
AP35
AD8065
C156
1000P
R138
1K
R139
20K
C157
1P
AP36
AD8038
R140
1K
R142
2K
C158
0.01U
R143
3K
C159
0.01U
R141
1K
C160
200P
C161
100P
C162
100P
TLV3502
IC35
74LVC1G08
IC36
CH25_AND
CH25_COMP
R144
1K
VTH17
HM1F42TAP000H6
c4
CH24
c3
C163
56P
R145
10M
C164
1P
AP37
AD8065
C165
1000P
R146
1K
R147
20K
C166
1P
AP38
AD8038
R148
1K
R150
2K
C167
0.01U
R151
3K
C168
0.01U
R149
1K
C169
200P
C170
100P
C171
100P
TLV3502
IC37
74LVC1G08
IC38
CH24_AND
CH24_COMP
R152
1K
VTH20
HM1F42TAP000H6
a4
CH32
a3
C172
56P
R153
10M
C173
1P
AP39
AD8065
C174
1000P
R154
1K
R155
20K
C175
1P
AP40
AD8038
R156
1K
R158
2K
C176
0.01U
R159
3K
C177
0.01U
R157
1K
C178
200P
C179
100P
C180
100P
TLV3502
IC39
74LVC1G08
IC40
CH32_AND
CH32_COMP
R160
1K
VTH19
EX2
AGND
VREF
AVCC
V−
V+
OUT
DS
REPIC CORPORATION
TITLE
MuTRG-AD_TX V2
PAGE
DATE & REV
2008/07/22
RP-0765S-2
5/24
DESIGNED BY
N.SATO

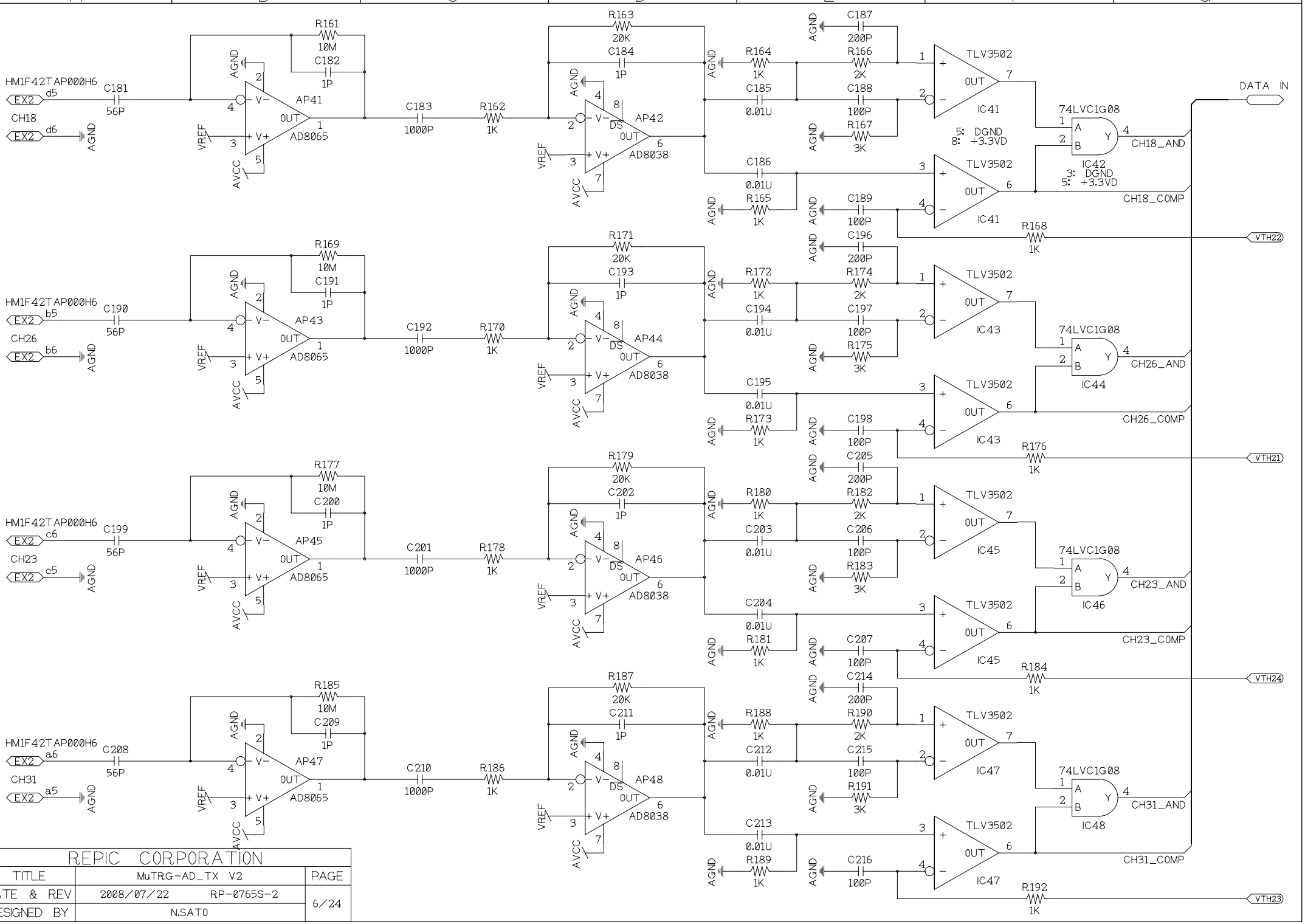
A
B
C
D
E
F
G
1
2
3
4
5
HM1F42TAP000H6
EX2
d5
CH18
d6
C181
56P
R161
10M
C182
1P
AP41
AD8065
C183
1000P
R162
1K
R163
20K
C184
1P
AP42
AD8038
R164
1K
C185
0.01U
R165
1K
C186
0.01U
C187
200P
R166
2K
R167
3K
C188
100P
C189
100P
TLV3502
IC41
74LVC1G08
IC42
5: DGND
8: +3.3VD
3: DGND
5: +3.3VD
DATA IN
CH18_AND
CH18_COMP
R168
1K
VTH22
HM1F42TAP000H6
EX2
b5
CH26
b6
C190
56P
R169
10M
C191
1P
AP43
AD8065
C192
1000P
R170
1K
R171
20K
C193
1P
AP44
AD8038
R172
1K
C194
0.01U
R173
1K
C195
0.01U
C196
200P
R174
2K
R175
3K
C197
100P
C198
100P
IC43
IC44
CH26_AND
CH26_COMP
R176
1K
VTH21
HM1F42TAP000H6
EX2
c6
CH23
c5
C199
56P
R177
10M
C200
1P
AP45
AD8065
C201
1000P
R178
1K
R179
20K
C202
1P
AP46
AD8038
R180
1K
C203
0.01U
R181
1K
C204
0.01U
C205
200P
R182
2K
R183
3K
C206
100P
C207
100P
IC45
IC46
CH23_AND
CH23_COMP
R184
1K
VTH24
HM1F42TAP000H6
EX2
a6
CH31
a5
C208
56P
R185
10M
C209
1P
AP47
AD8065
C210
1000P
R186
1K
R187
20K
C211
1P
AP48
AD8038
R188
1K
C212
0.01U
R189
1K
C213
0.01U
C214
200P
R190
2K
R191
3K
C215
100P
C216
100P
IC47
IC48
CH31_AND
CH31_COMP
R192
1K
VTH23
AGND
VREF
AVCC
V−
V+
OUT
DS
REPIC CORPORATION
TITLE
MuTRG-AD_TX V2
PAGE
DATE & REV
2008/07/22 RP-0765S-2
6/24
DESIGNED BY
N.SATO

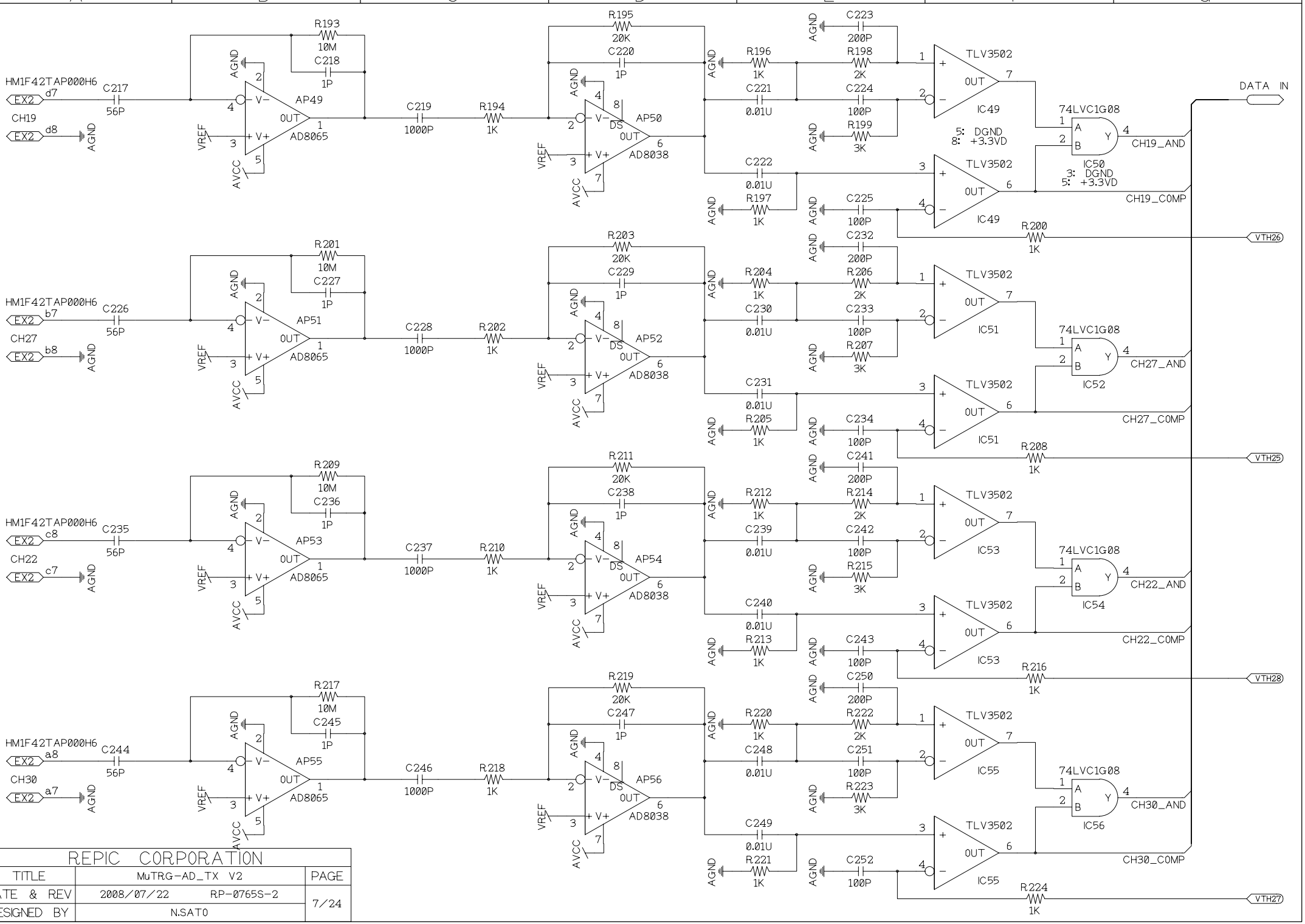
A
B
C
D
E
F
G
1
2
3
4
5
HM1F42TAP000H6
EX2
d7
CH19
d8
C217
56P
R193
10M
C218
1P
AP49
AD8065
C219
1000P
R194
1K
R195
20K
C220
1P
AP50
AD8038
R196
1K
C221
0.01U
R198
2K
C223
200P
C224
100P
R199
3K
TLV3502
IC49
74LVC1G08
IC50
5: DGND
8: +3.3VD
3: DGND
5: +3.3VD
DATA IN
CH19_AND
CH19_COMP
C222
0.01U
R197
1K
C225
100P
R200
1K
VTH26
HM1F42TAP000H6
b7
CH27
b8
C226
56P
R201
10M
C227
1P
AP51
AD8065
C228
1000P
R202
1K
R203
20K
C229
1P
AP52
AD8038
R204
1K
C230
0.01U
R206
2K
C232
200P
C233
100P
R207
3K
IC51
IC52
CH27_AND
CH27_COMP
C231
0.01U
R205
1K
C234
100P
R208
1K
VTH25
HM1F42TAP000H6
c8
CH22
c7
C235
56P
R209
10M
C236
1P
AP53
AD8065
C237
1000P
R210
1K
R211
20K
C238
1P
AP54
AD8038
R212
1K
C239
0.01U
R214
2K
C241
200P
C242
100P
R215
3K
IC53
IC54
CH22_AND
CH22_COMP
C240
0.01U
R213
1K
C243
100P
R216
1K
VTH28
HM1F42TAP000H6
a8
CH30
a7
C244
56P
R217
10M
C245
1P
AP55
AD8065
C246
1000P
R218
1K
R219
20K
C247
1P
AP56
AD8038
R220
1K
C248
0.01U
R222
2K
C250
200P
C251
100P
R223
3K
IC55
IC56
CH30_AND
CH30_COMP
C249
0.01U
R221
1K
C252
100P
R224
1K
VTH27
AGND
VREF
AVCC
V-
V+
OUT
DS
REPIC CORPORATION
TITLE
MuTRG-AD_TX V2
PAGE
DATE & REV
2008/07/22 RP-0765S-2
7/24
DESIGNED BY
N.SATO

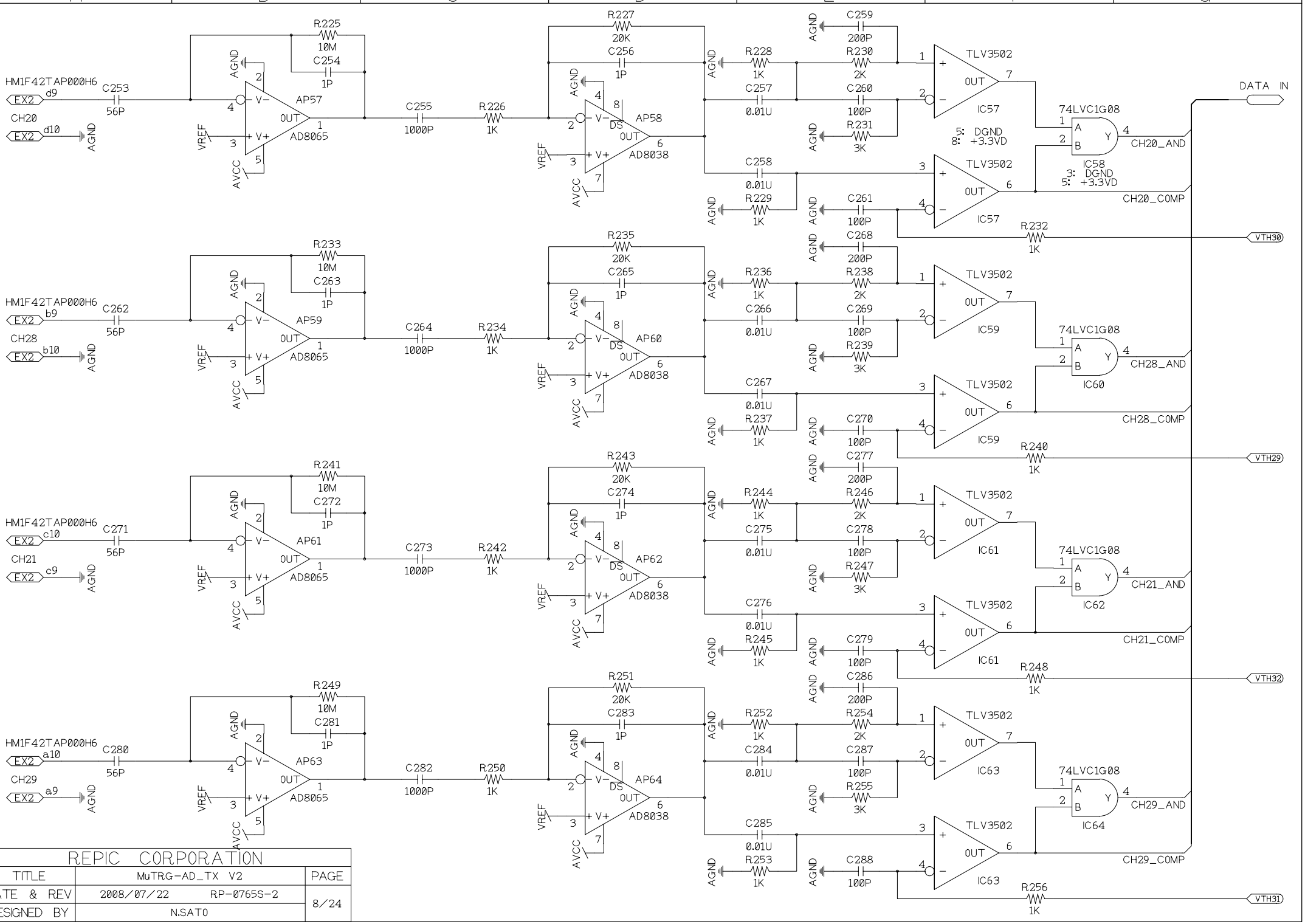

REPIC CORPORATION		
TITLE	MuTRG-AD_TX V2	PAGE
DATE & REV	2008/07/22 RP-0765S-2	8/24
DESIGNED BY	N.SATO	

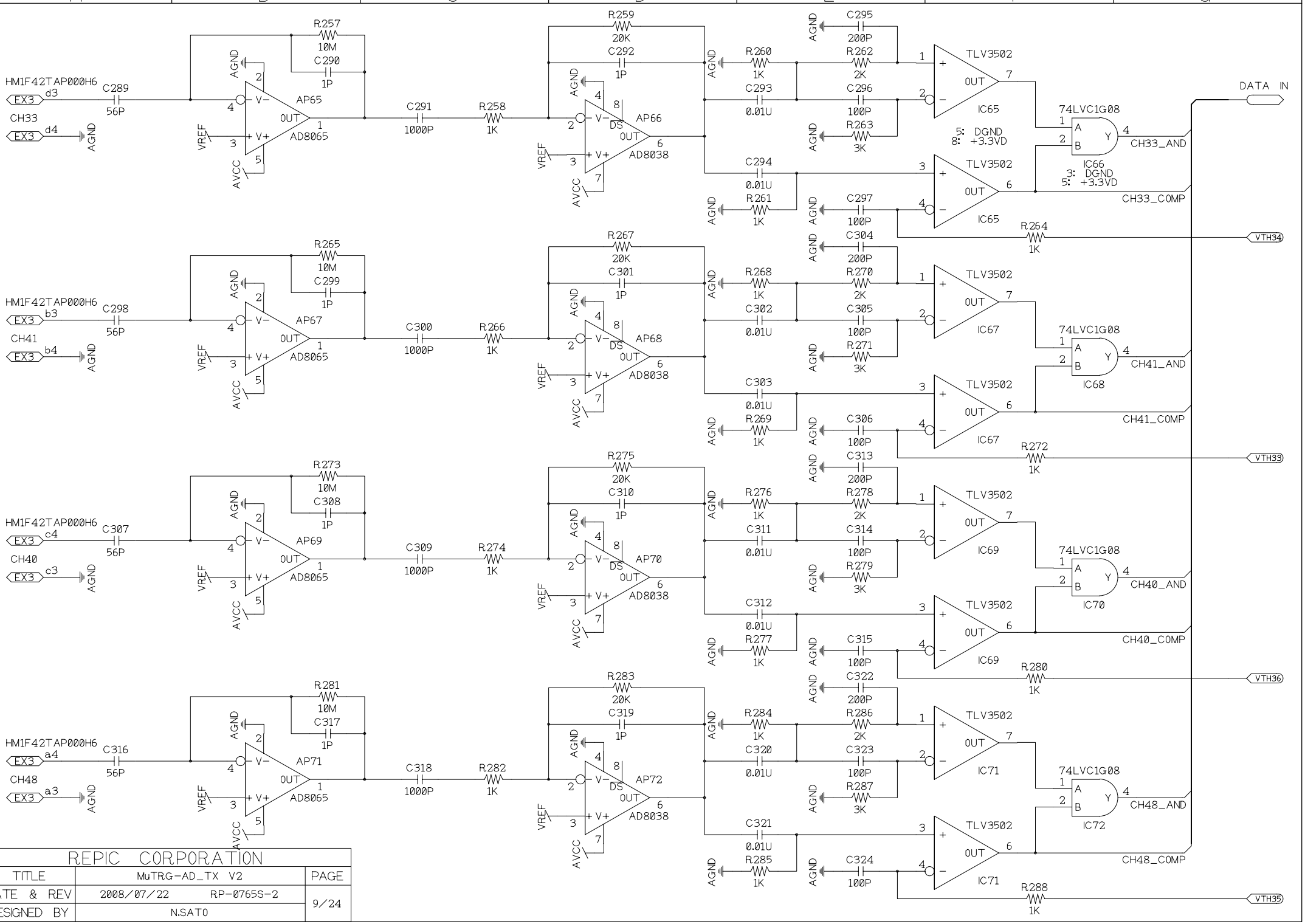

REPIC CORPORATION		
TITLE	MuTRG-AD_TX V2	PAGE
DATE & REV	2008/07/22 RP-0765S-2	9/24
DESIGNED BY	N.SATO	

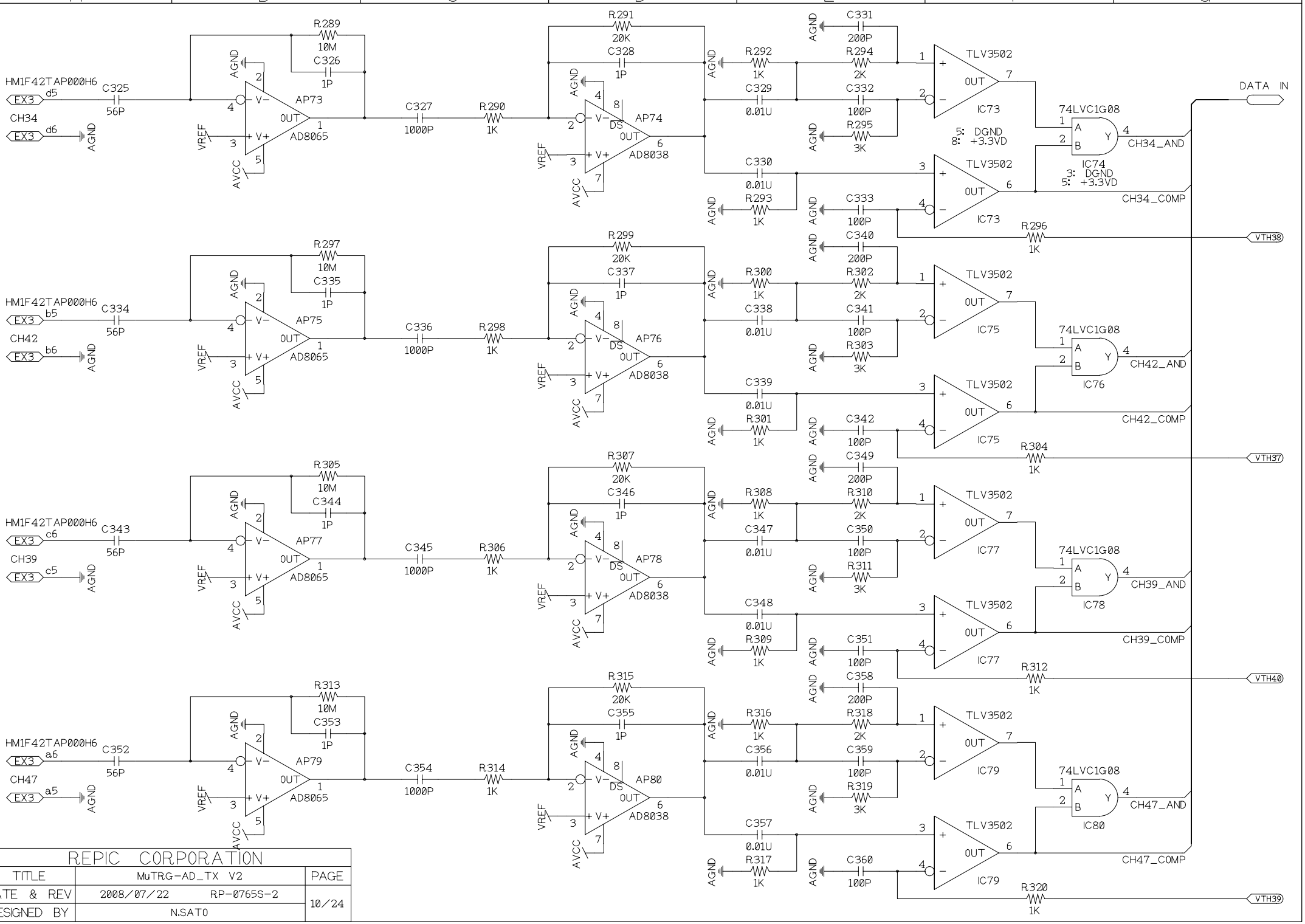

REPIC CORPORATION		
TITLE	MuTRG-AD_TX V2	PAGE
DATE & REV	2008/07/22 RP-0765S-2	10/24
DESIGNED BY	N.SATO	

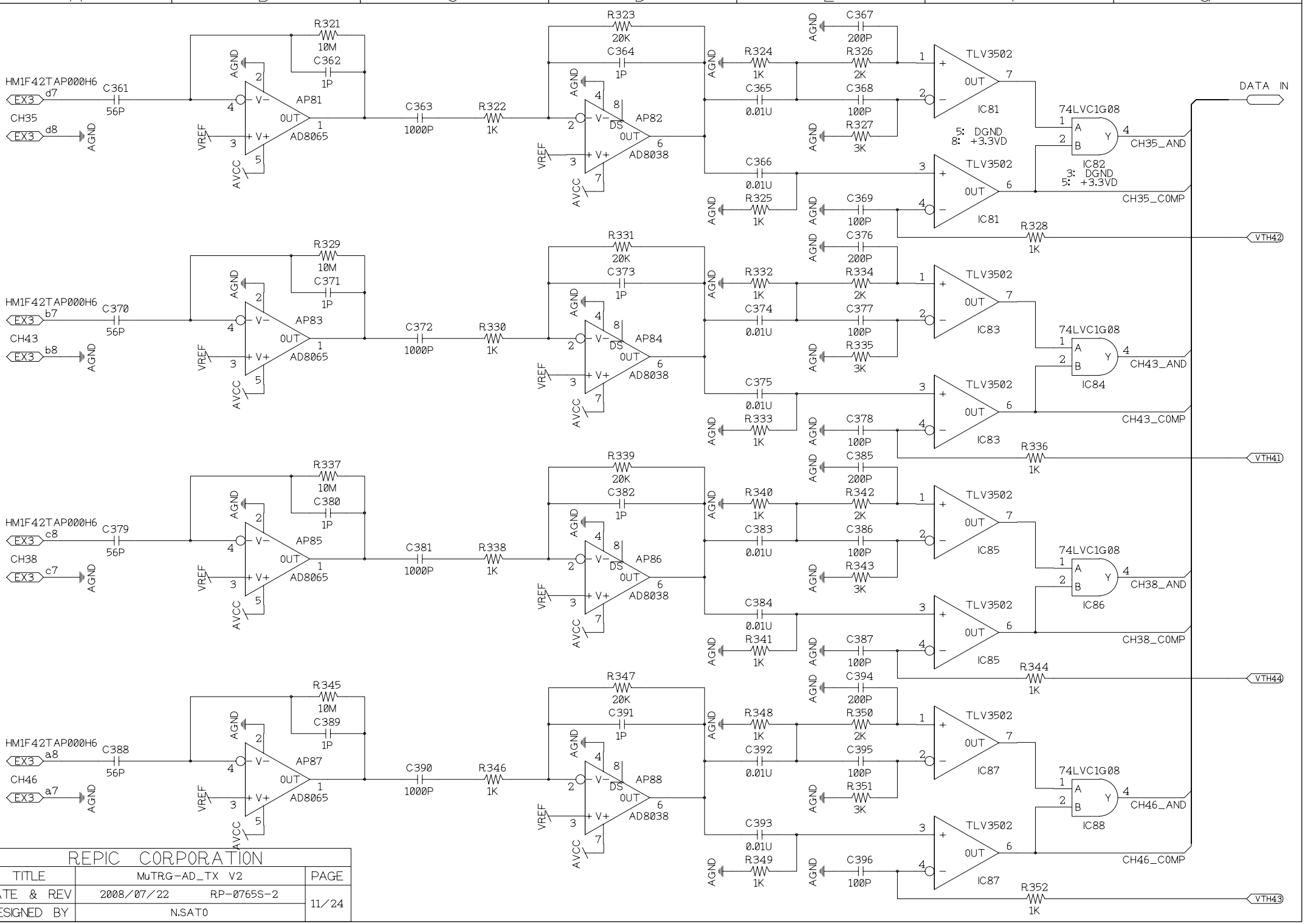

REPIC CORPORATION		
TITLE	MuTRG-AD_TX V2	PAGE
DATE & REV	2008/07/22 RP-0765S-2	11/24
DESIGNED BY	N.SATO	

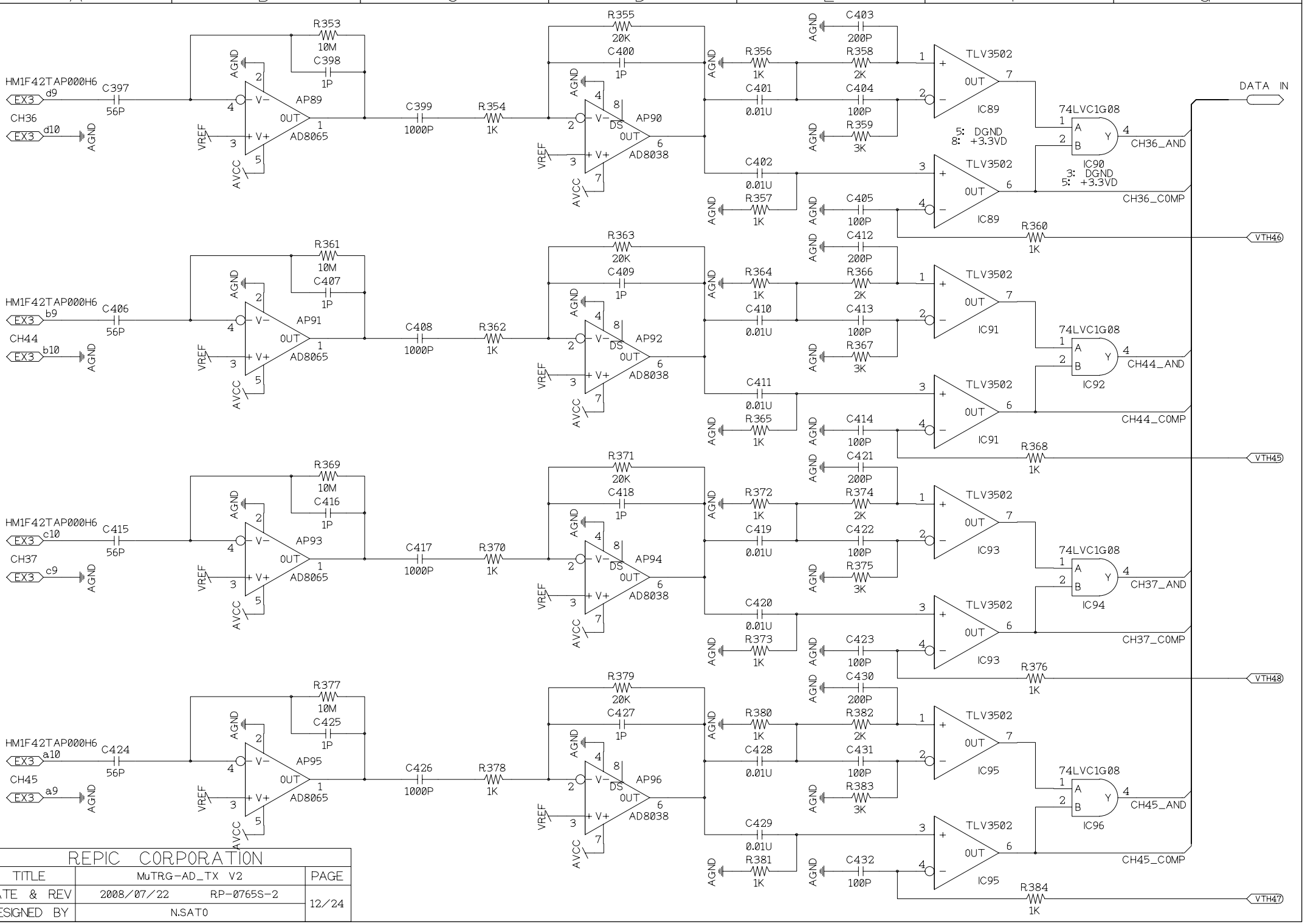

REPIC CORPORATION		
TITLE	MuTRG-AD_TX V2	PAGE
DATE & REV	2008/07/22 RP-0765S-2	12/24
DESIGNED BY	N.SATO	

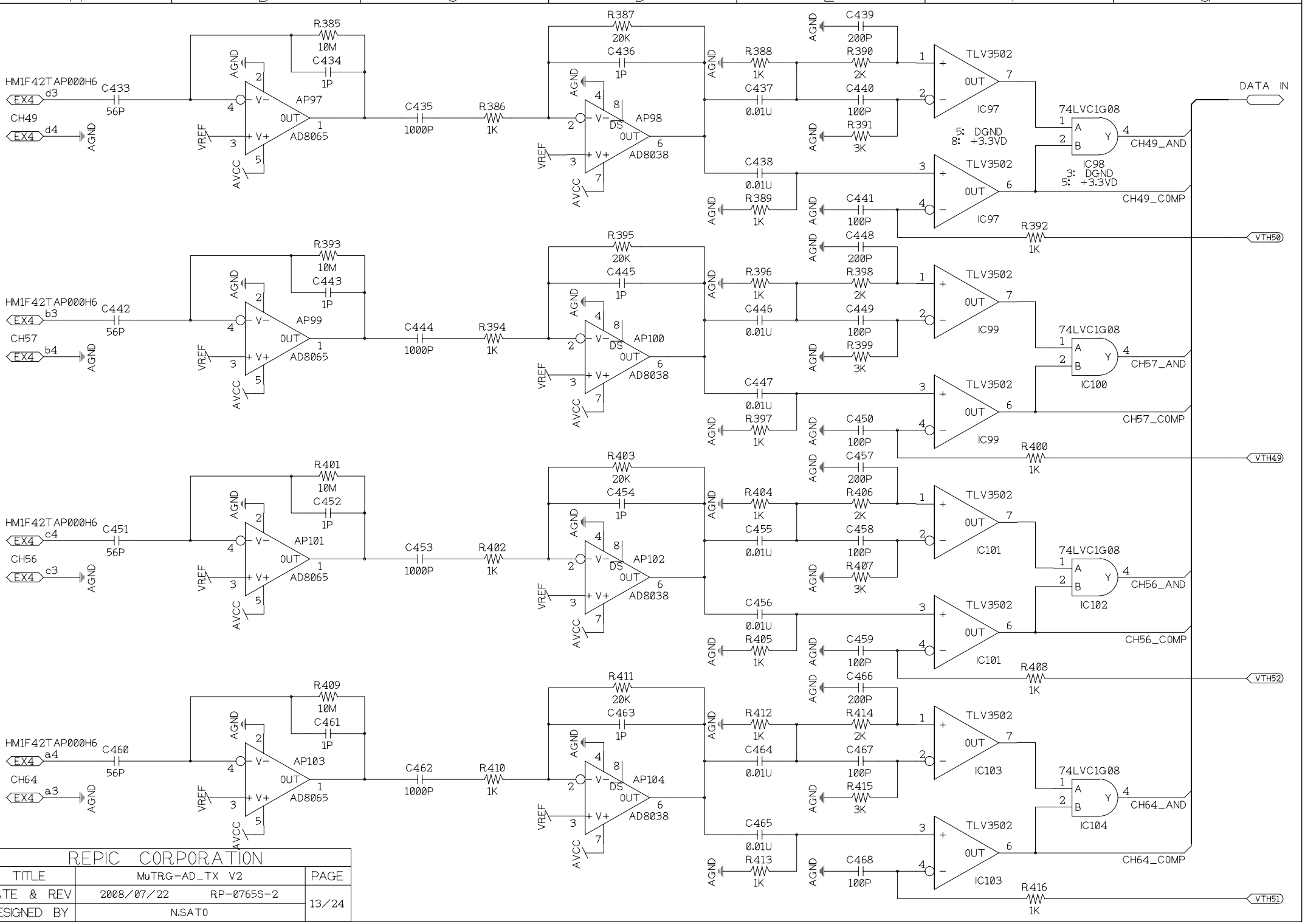

REPIC CORPORATION		
TITLE	MuTRG-AD_TX V2	PAGE
DATE & REV	2008/07/22 RP-0765S-2	13/24
DESIGNED BY	N.SATO	

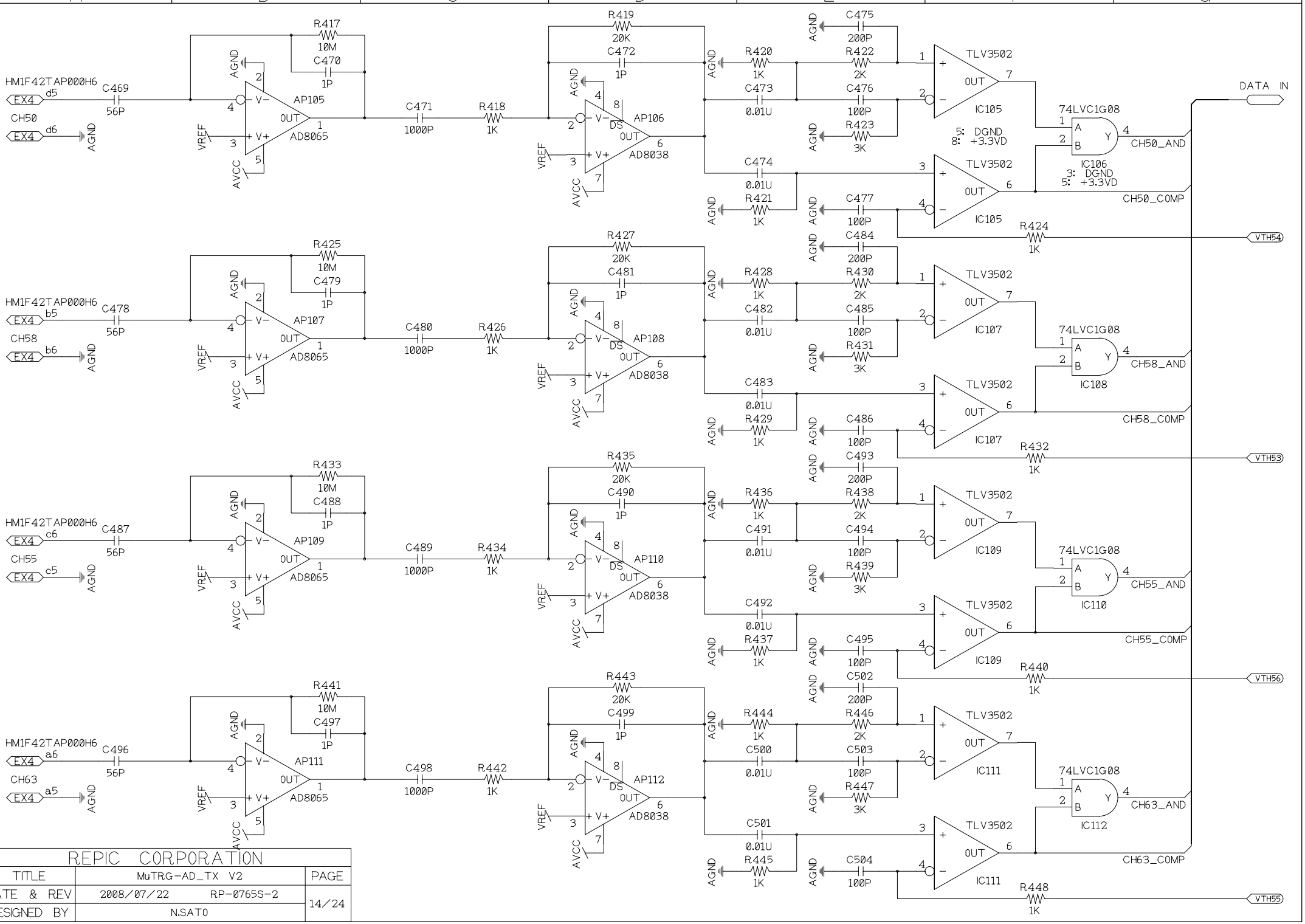
A
B
C
D
E
F
G
1
2
3
4
5
HM1F42TAP000H6
EX4
d5
CH50
d6
C469
56P
R417
10M
C470
1P
AP105
AD8065
C471
1000P
R418
1K
R419
20K
C472
1P
AP106
AD8038
R420
1K
C473
0.01U
C474
0.01U
R421
1K
R422
2K
R423
3K
C475
200P
C476
100P
C477
100P
TLV3502
IC105
5: DGND
8: +3.3VD
74LVC1G08
IC106
3: DGND
5: +3.3VD
CH50_AND
CH50_COMP
DATA IN
R424
1K
VTH54
HM1F42TAP000H6
b5
CH58
b6
C478
56P
R425
10M
C479
1P
AP107
AD8065
C480
1000P
R426
1K
R427
20K
C481
1P
AP108
AD8038
R428
1K
C482
0.01U
C483
0.01U
R429
1K
R430
2K
R431
3K
C484
200P
C485
100P
C486
100P
TLV3502
IC107
74LVC1G08
IC108
CH58_AND
CH58_COMP
R432
1K
VTH53
HM1F42TAP000H6
c6
CH55
c5
C487
56P
R433
10M
C488
1P
AP109
AD8065
C489
1000P
R434
1K
R435
20K
C490
1P
AP110
AD8038
R436
1K
C491
0.01U
C492
0.01U
R437
1K
R438
2K
R439
3K
C493
200P
C494
100P
C495
100P
TLV3502
IC109
74LVC1G08
IC110
CH55_AND
CH55_COMP
R440
1K
VTH56
HM1F42TAP000H6
a6
CH63
a5
C496
56P
R441
10M
C497
1P
AP111
AD8065
C498
1000P
R442
1K
R443
20K
C499
1P
AP112
AD8038
R444
1K
C500
0.01U
C501
0.01U
R445
1K
R446
2K
R447
3K
C502
200P
C503
100P
C504
100P
TLV3502
IC111
74LVC1G08
IC112
CH63_AND
CH63_COMP
R448
1K
VTH55
AGND
VREF
AVCC
OUT
DS
REPIC CORPORATION
TITLE
MuTRG-AD_TX V2
PAGE
DATE & REV
2008/07/22 RP-0765S-2
14/24
DESIGNED BY
N.SATO

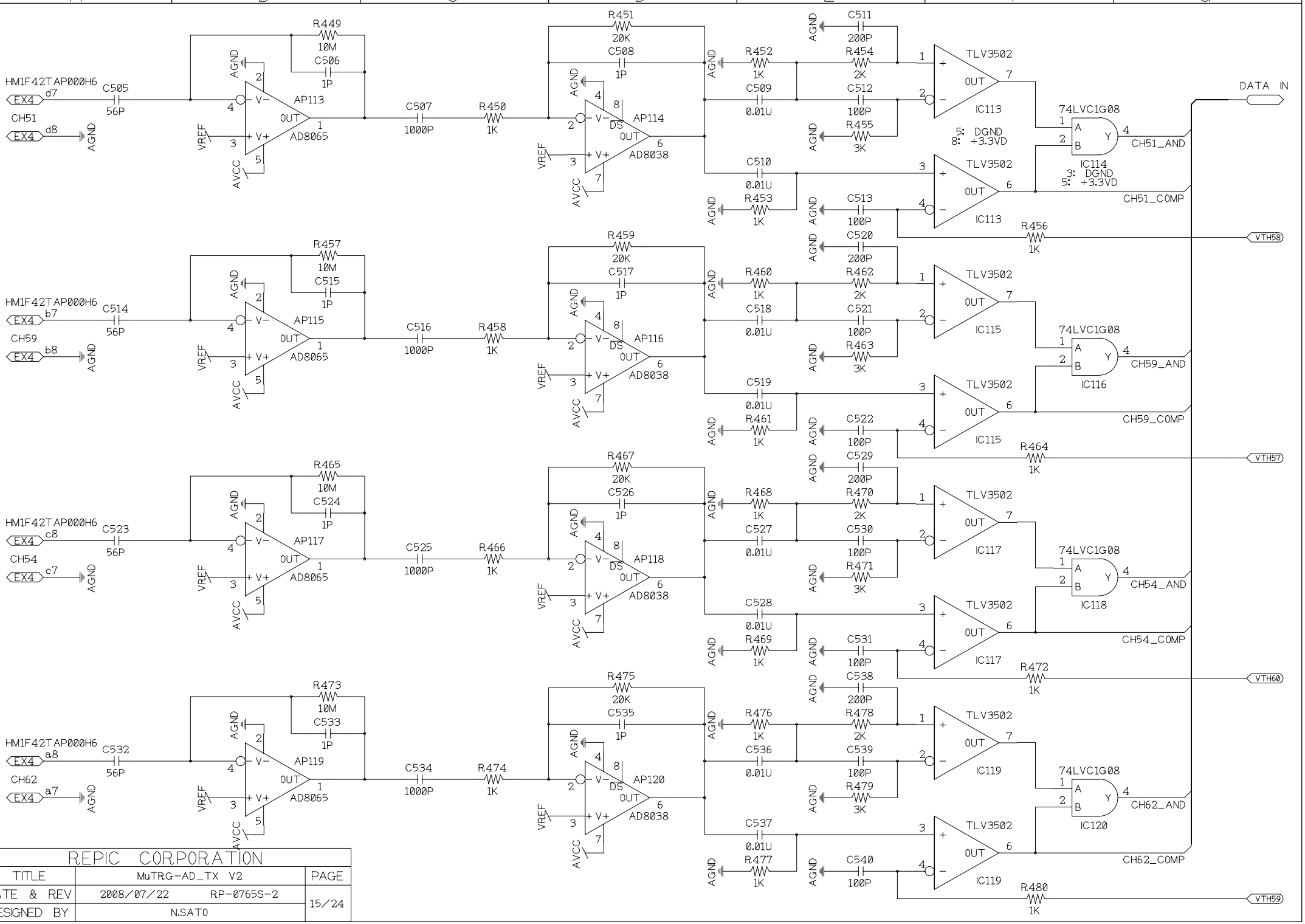

REPIC CORPORATION		
TITLE	MuTRG-AD_TX V2	PAGE
DATE & REV	2008/07/22 RP-0765S-2	15/24
DESIGNED BY	N.SATO	

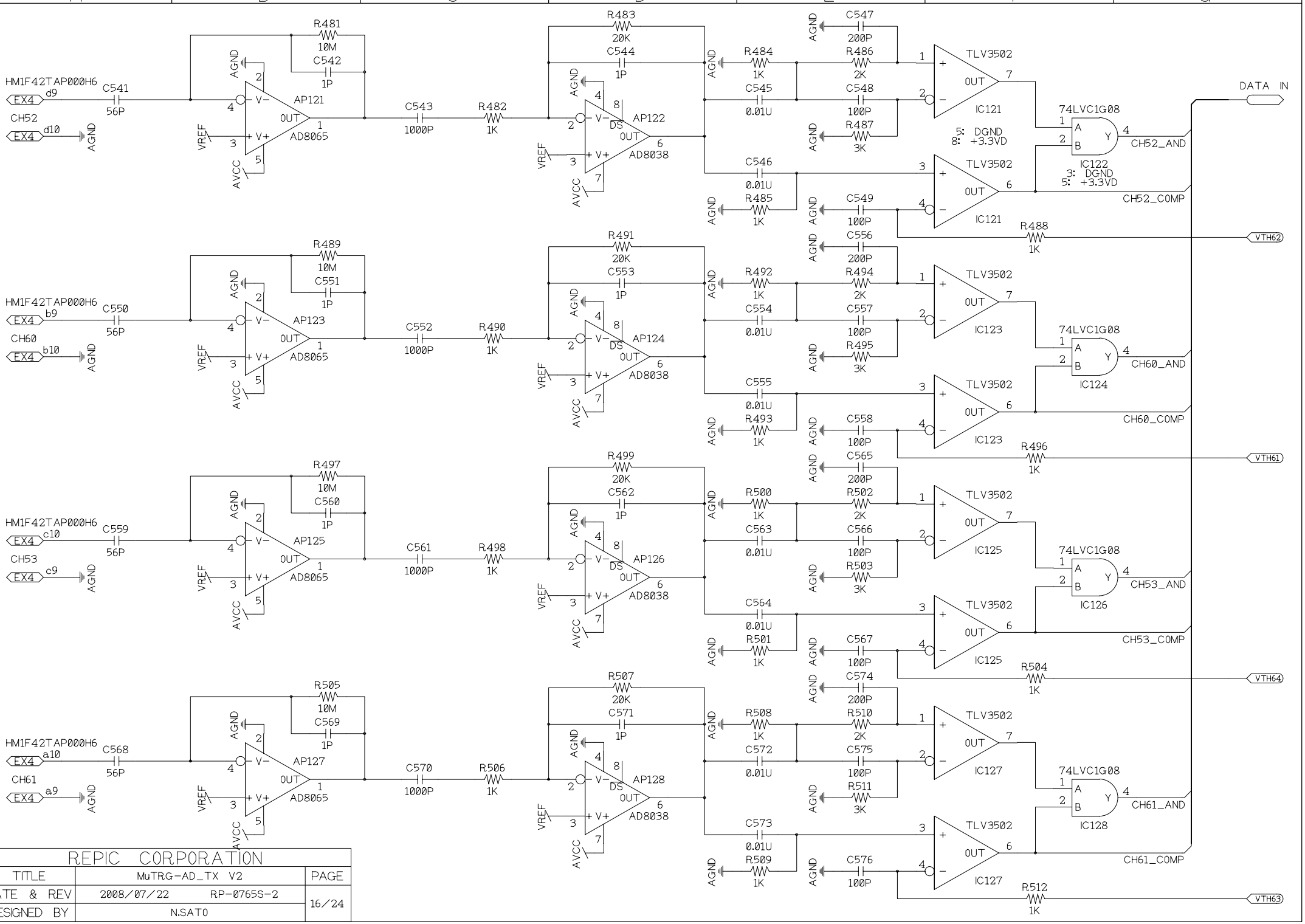
A
B
C
D
E
F
G
1
2
3
4
5
HM1F42TAP000H6
EX4
d9
CH52
d10
C541
56P
R481
10M
C542
1P
AP121
AD8065
C543
1000P
R482
1K
R483
20K
C544
1P
AP122
AD8038
R484
1K
C545
0.01U
R485
1K
C546
0.01U
C547
200P
R486
2K
C548
100P
R487
3K
C549
100P
TLV3502
IC121
5: DGND
8: +3.3VD
74LVC1G08
IC122
3: DGND
5: +3.3VD
DATA IN
CH52_AND
CH52_COMP
R488
1K
VTH62
HM1F42TAP000H6
EX4
b9
CH60
b10
C550
56P
R489
10M
C551
1P
AP123
AD8065
C552
1000P
R490
1K
R491
20K
C553
1P
AP124
AD8038
R492
1K
C554
0.01U
R493
1K
C555
0.01U
C556
200P
R494
2K
C557
100P
R495
3K
C558
100P
TLV3502
IC123
74LVC1G08
IC124
CH60_AND
CH60_COMP
R496
1K
VTH61
HM1F42TAP000H6
EX4
c10
CH53
c9
C559
56P
R497
10M
C560
1P
AP125
AD8065
C561
1000P
R498
1K
R499
20K
C562
1P
AP126
AD8038
R500
1K
C563
0.01U
R501
1K
C564
0.01U
C565
200P
R502
2K
C566
100P
R503
3K
C567
100P
TLV3502
IC125
74LVC1G08
IC126
CH53_AND
CH53_COMP
R504
1K
VTH64
HM1F42TAP000H6
EX4
a10
CH61
a9
C568
56P
R505
10M
C569
1P
AP127
AD8065
C570
1000P
R506
1K
R507
20K
C571
1P
AP128
AD8038
R508
1K
C572
0.01U
R509
1K
C573
0.01U
C574
200P
R510
2K
C575
100P
R511
3K
C576
100P
TLV3502
IC127
74LVC1G08
IC128
CH61_AND
CH61_COMP
R512
1K
VTH63
AGND
VREF
AVCC
V−
V+
OUT
DS
REPIC CORPORATION
TITLE
MuTRG-AD_TX V2
PAGE
DATE & REV
2008/07/22 RP-0765S-2
16/24
DESIGNED BY
N.SATO

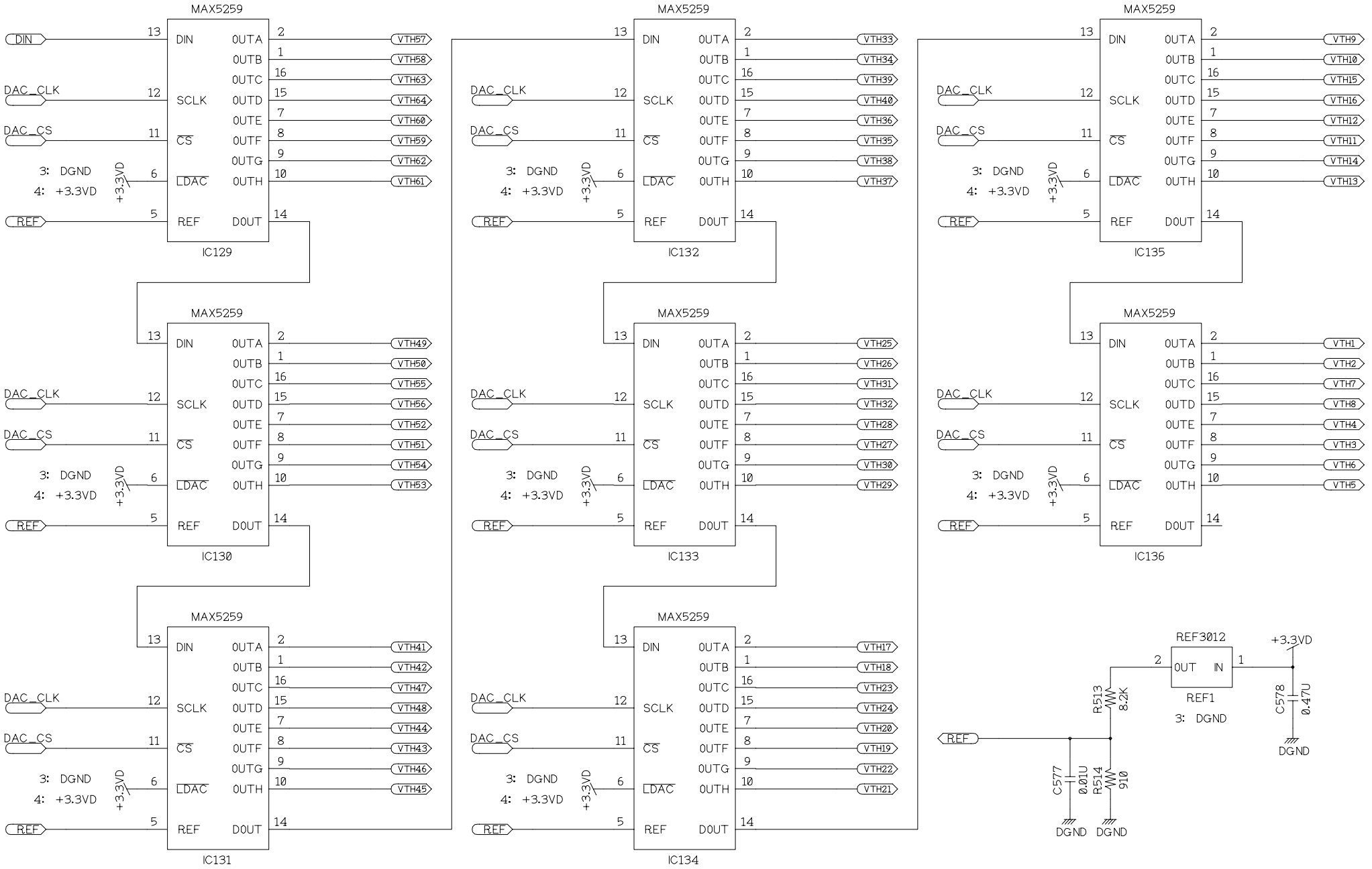

REPIC CORPORATION		
TITLE	MuTRG-AD_TX V2	PAGE
DATE & REV	2008/07/22 RP-0765S-2	17/24
DESIGNED BY	N.SATO	

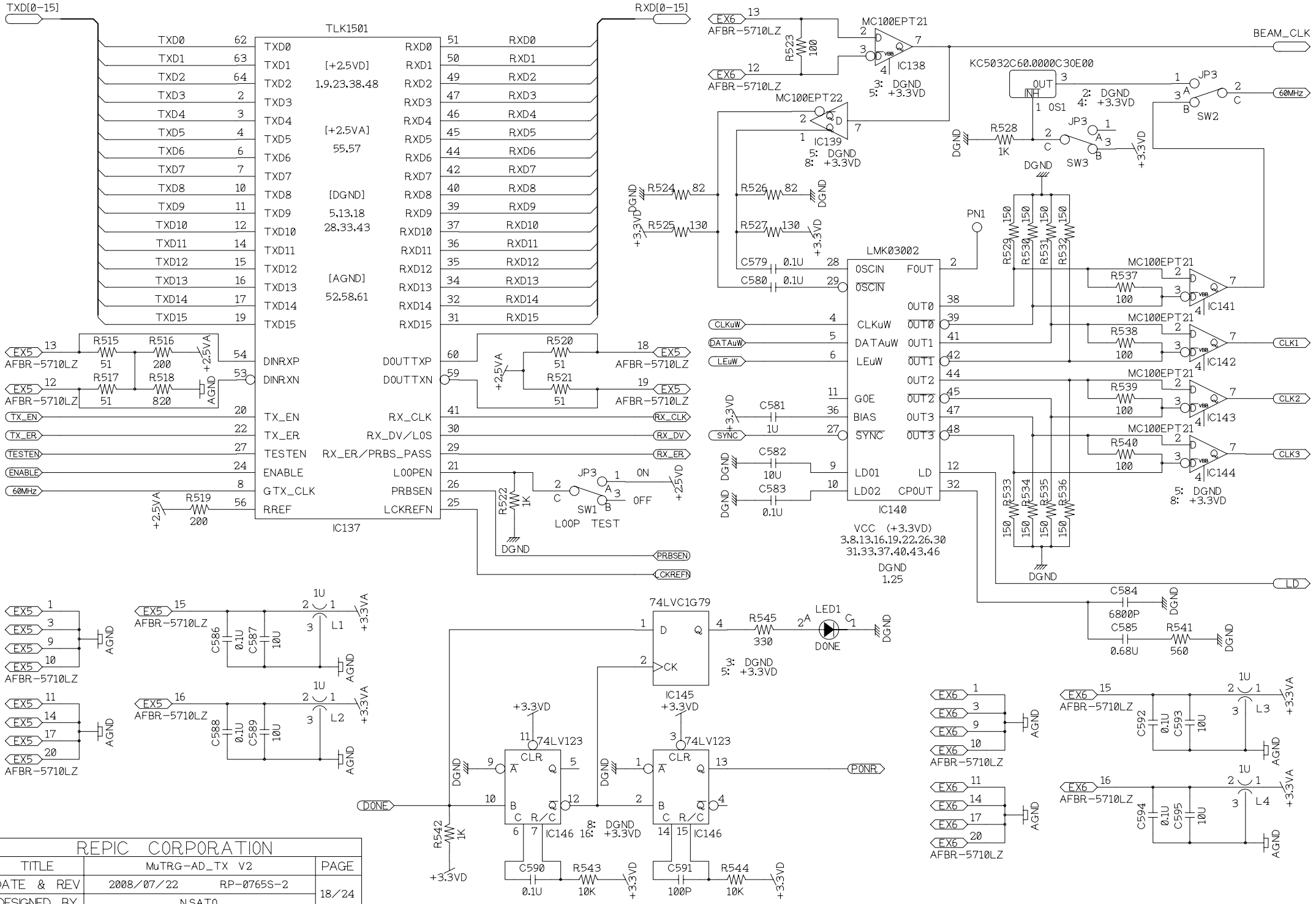
TXD[0-15]
RXD[0-15]
TLK1501
IC137
[+2.5VD]
1,9,23,38,48
[+2.5VA]
55,57
[DGND]
5,13,18
28,33,43
[AGND]
52,58,61
DINRXP
DINRXN
DOUTTXP
DOUTTXN
TX_EN
TX_ER
TESTEN
ENABLE
GTX_CLK
RREF
RX_CLK
RX_DV/LOS
RX_ER/PRBS_PASS
LOOPEN
PRBSEN
LCKREFN
LOOP TEST
SW1
PRBSEN
LCKREFN
MC100EPT21
IC138
IC139
IC141
IC142
IC143
IC144
MC100EPT22
BEAM_CLK
KC5032C60.0000C30E00
60MHz
SW2
SW3
LMK03002
IC140
VCC (+3.3VD)
3,8,13,16,19,22,26,30
31,33,37,40,43,46
DGND
1.25
CLK1
CLK2
CLK3
LD
74LVC1G79
IC145
LED1
DONE
74LV123
IC146
P0NR
REPIC CORPORATION
TITLE
MuTRG-AD_TX V2
PAGE
DATE & REV
2008/07/22 RP-0765S-2
18/24
DESIGNED BY
N.SATO

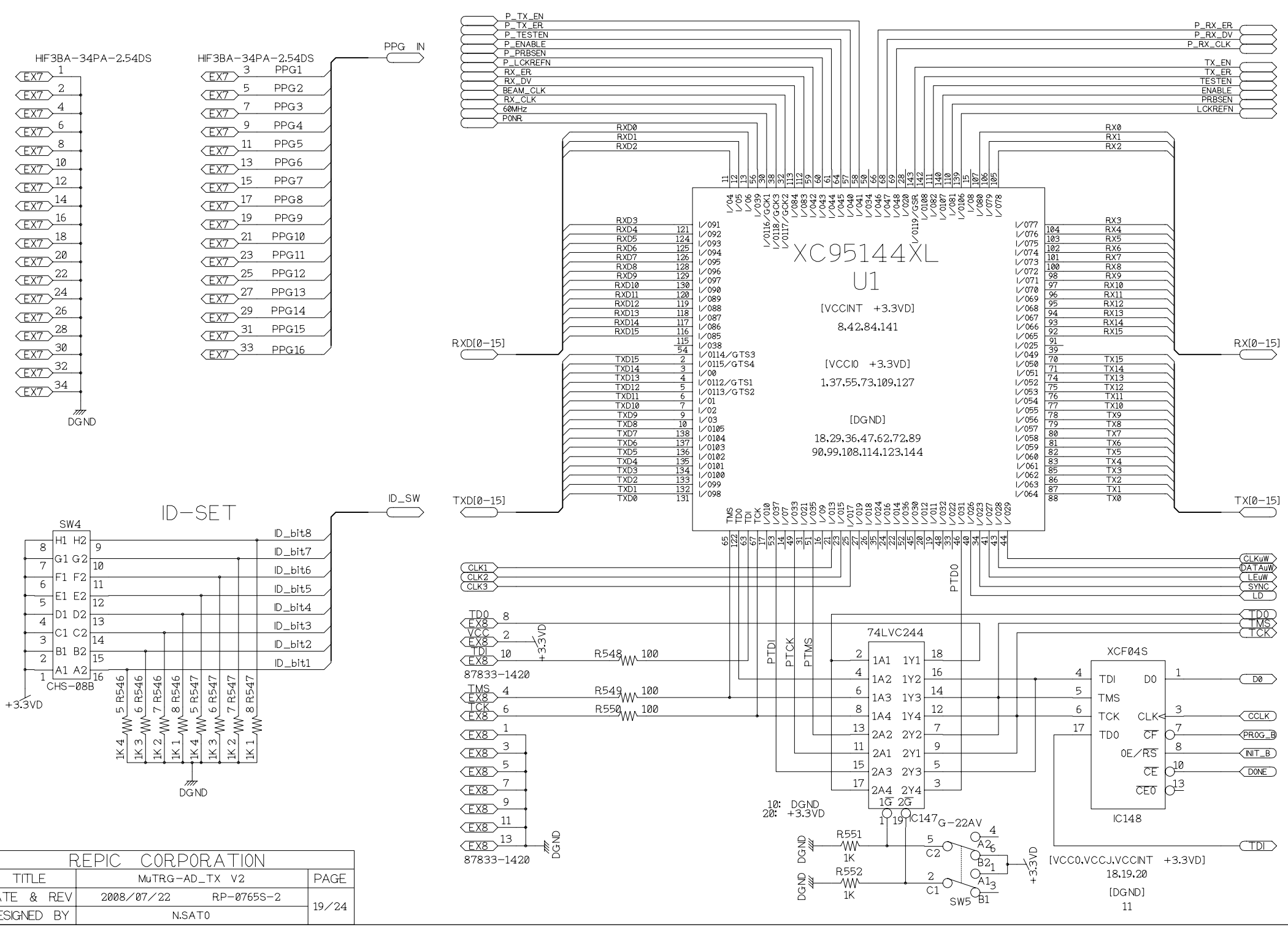

REPIC CORPORATION		
TITLE	MuTRG-AD_TX V2	PAGE
DATE & REV	2008/07/22 RP-0765S-2	19/24
DESIGNED BY	N.SATO	

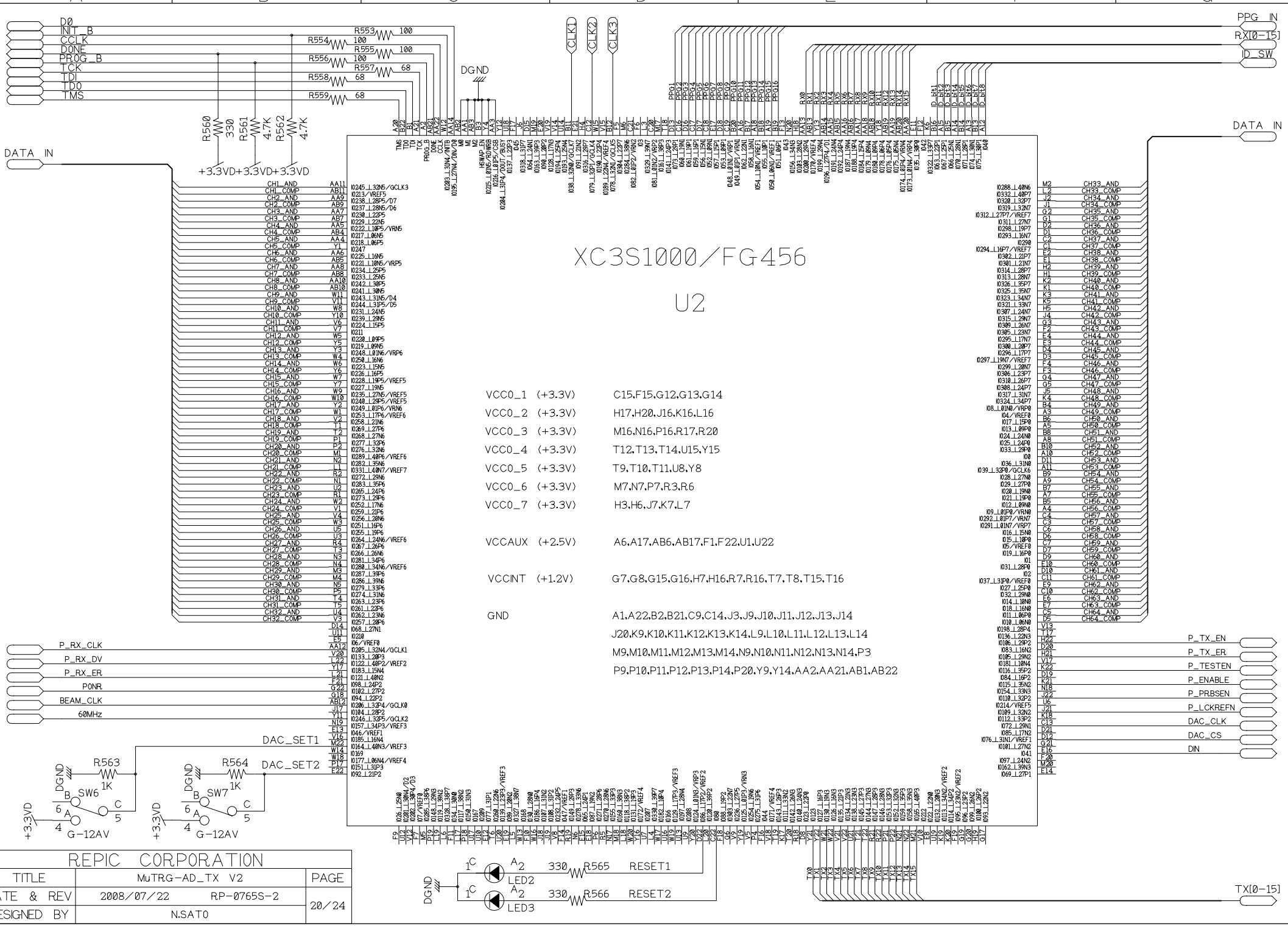

REPIC CORPORATION		
TITLE	MuTRG-AD_TX V2	PAGE
DATE & REV	2008/07/22 RP-0765S-2	20/24
DESIGNED BY	N.SATO	

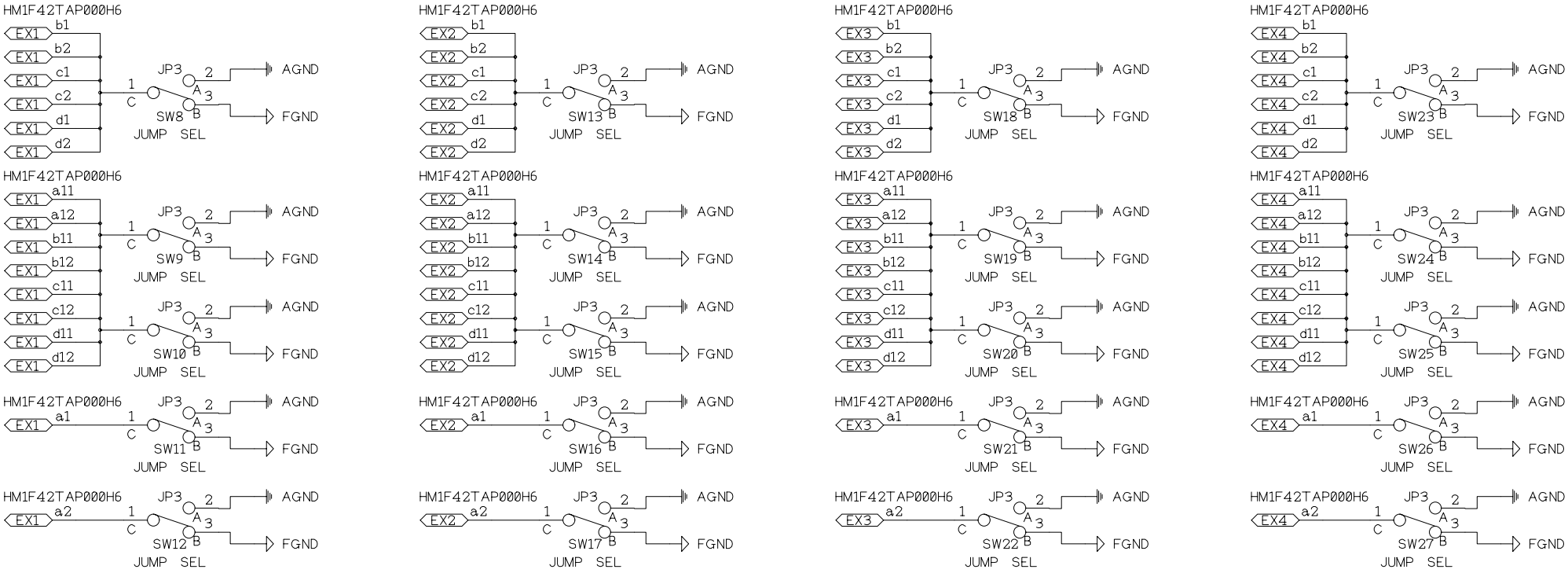

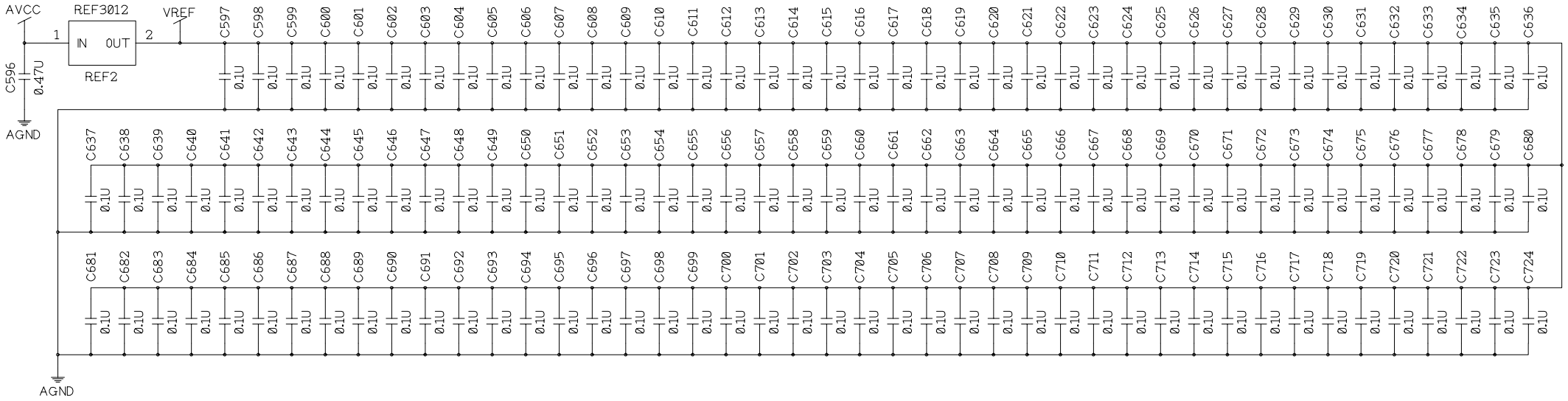

REPIC CORPORATION		
TITLE	MuTRG-AD_TX V2	PAGE
DATE & REV	2008/07/22 RP-0765S-2	21/24
DESIGNED BY	N.SATO	

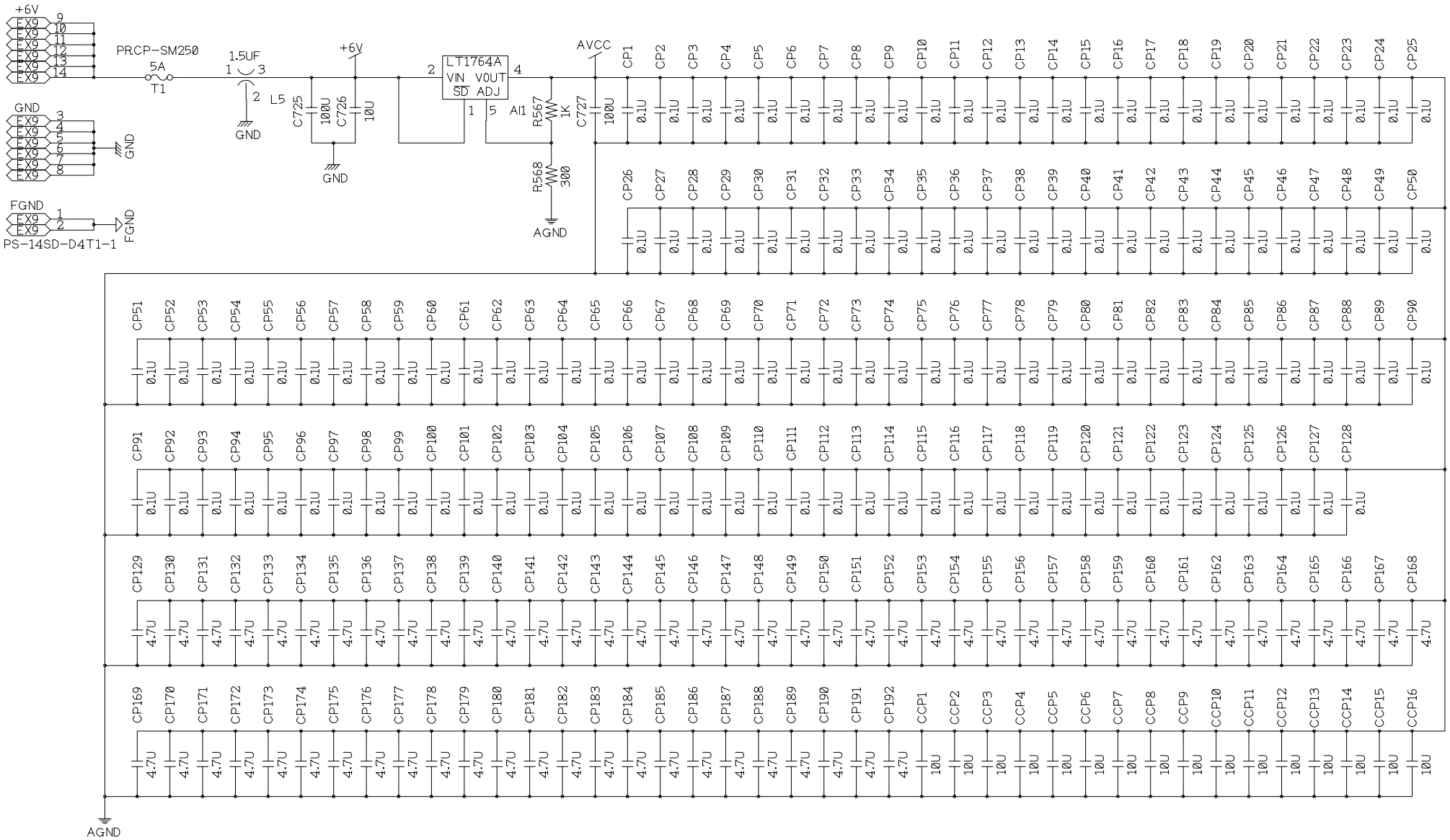

REPIC CORPORATION		
TITLE	MuTRG-AD_TX V2	PAGE
DATE & REV	2008/07/22 RP-0765S-2	22/24
DESIGNED BY	N.SATO	

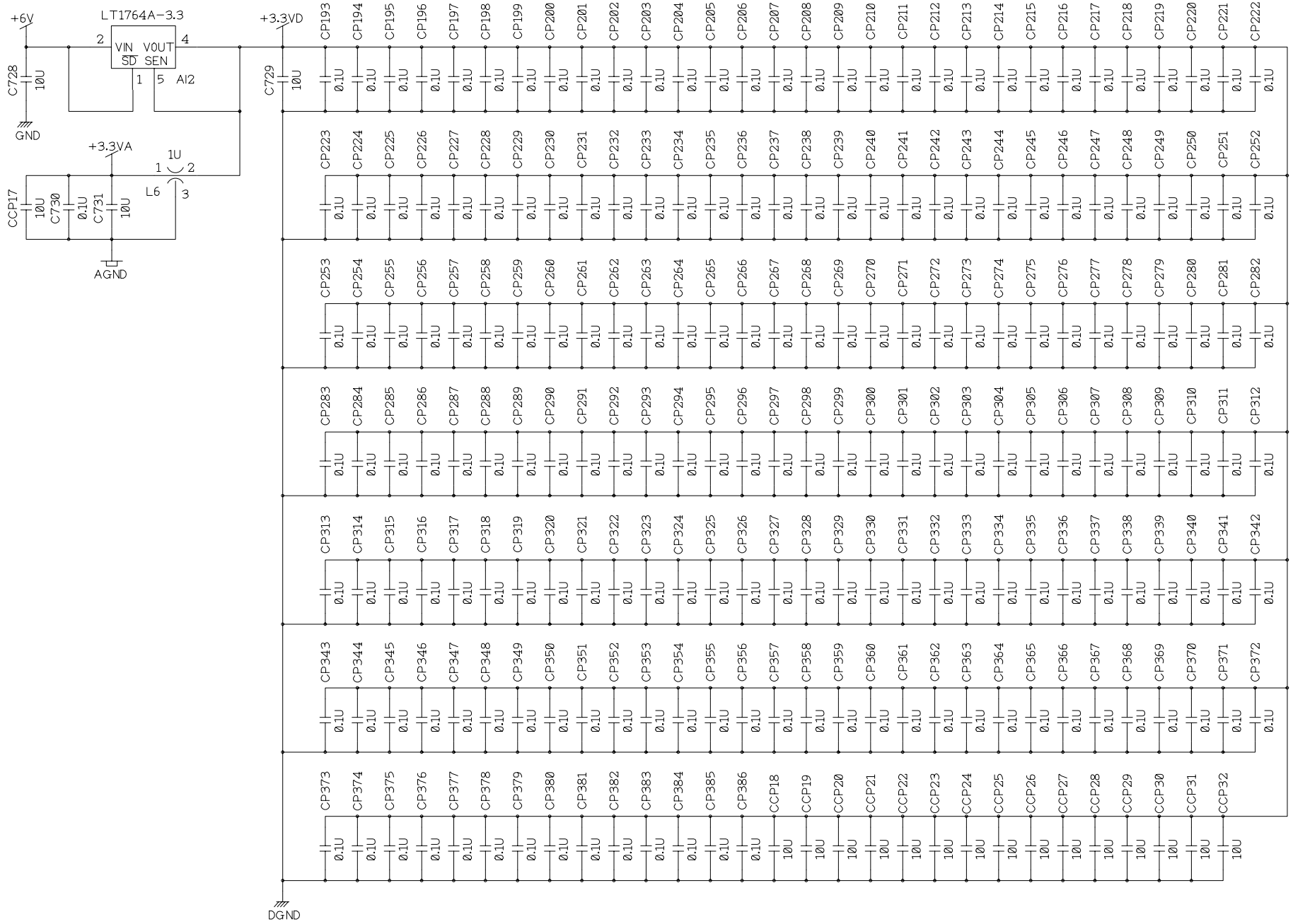

REPIC CORPORATION		
TITLE	MuTRG-AD_TX V2	PAGE
DATE & REV	2008/07/22 RP-0765S-2	23/24
DESIGNED BY	N.SATO	

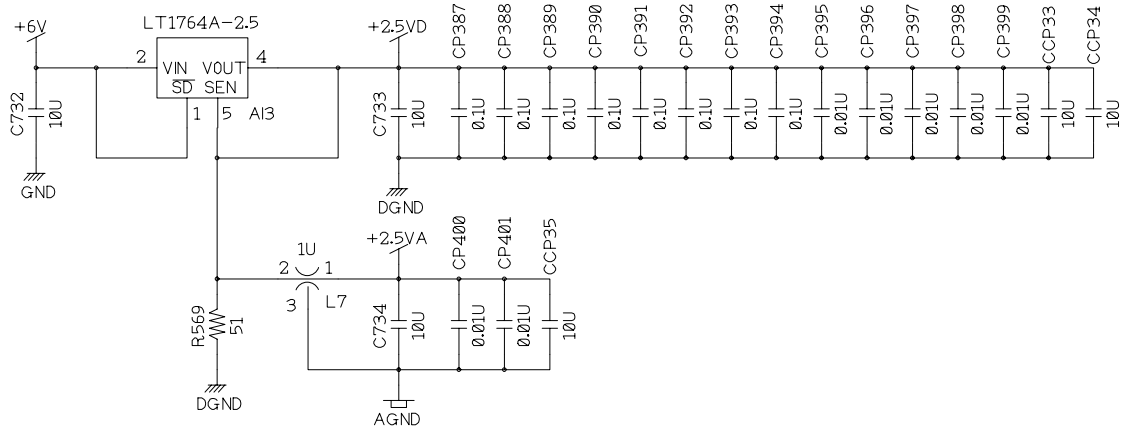

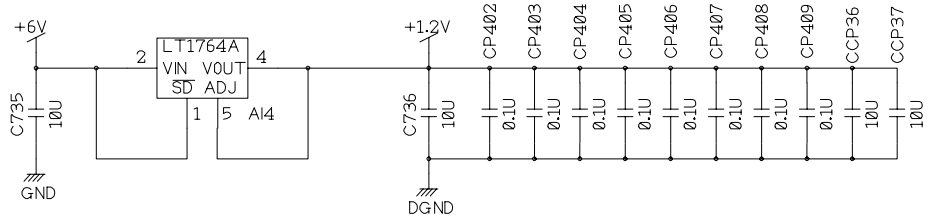

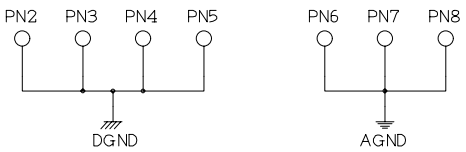

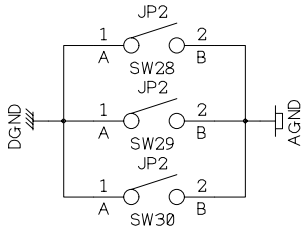

REPIC CORPORATION		
TITLE	MuTRG-AD_TX V2	PAGE
DATE & REV	2008/07/22 RP-0765S-2	24/24
DESIGNED BY	N.SATO	