ITEM NUMBER	NUMBER REQD	DESCRIPTION

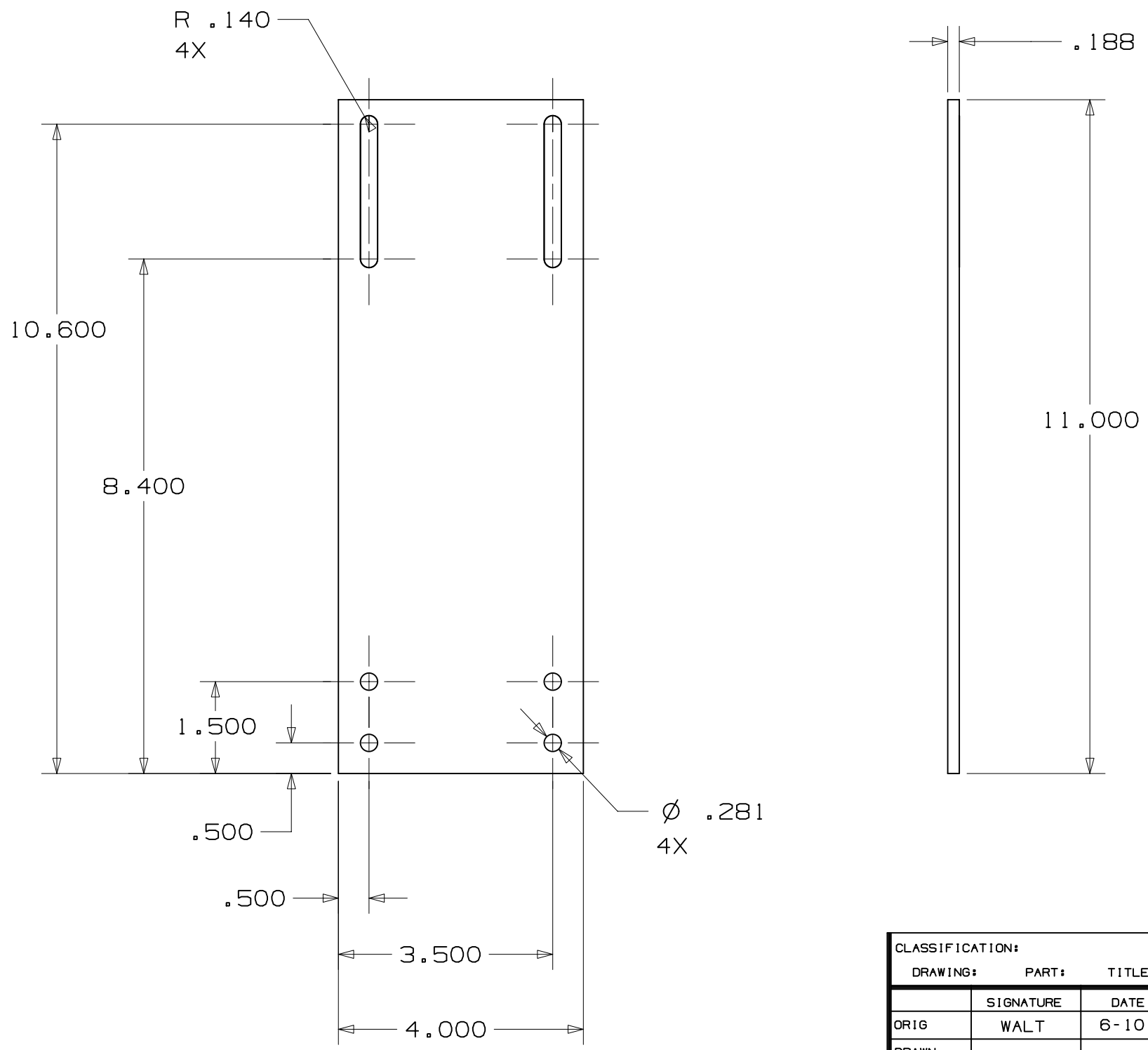

MAT'L: 3/16" ALUMINUM 60601-T6

CLASSIFICATION:			
DRAWING:	PART:	TITLE BLOCK:	
	SIGNATURE	DATE	GROUP
ORIG	WALT	6-10	P-25
DRAWN			
CHECKED			
PROJ ENGR			
APPROVED			
RELEASED			

REV	CLASS REVIEW	REVISIONS	DATE	CHANGED BY	CHECKED BY	APPROVED BY
—		ORIGINAL ISSUE	—	—	—	—

LOS ALAMOS
LOS ALAMOS NATIONAL LABORATORY
LOS ALAMOS, NEW MEXICO, 87545

TOLERANCE-(UNLESS OTHERWISE NOTED)
X=±_____ 0.XX =±_____ ANG=±_____
.X=±_____ 0.XXX=±_____ FIN= _____

TITLE
E-906 PROP TUBE
FRAME TO FRAME
ALUM. STRAP #2

SCALE	TOTAL SHEETS	DRAWING NO.	SIZE	NO.
			B	4B