REVISIONS							
REV	ZONE	ECN NO.	DESCRIPTION	BY	DATE	CKR	APP
A			INITIAL RELEASE				

NOTES:

1. IDENTIFY PART NO. IN ACCORDANCE WITH MIL–STD–130.
2. MATERIAL: .50 THK. PLATE, STAINLESS STEEL TYPE 304, BNL STK #F–67920.

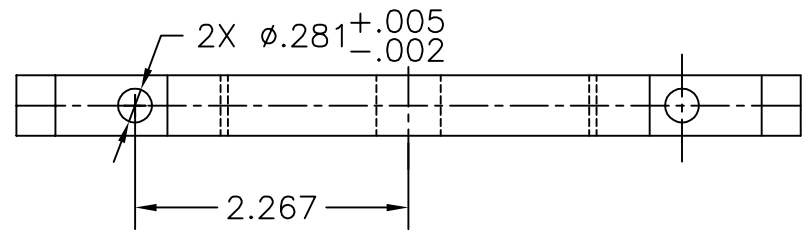

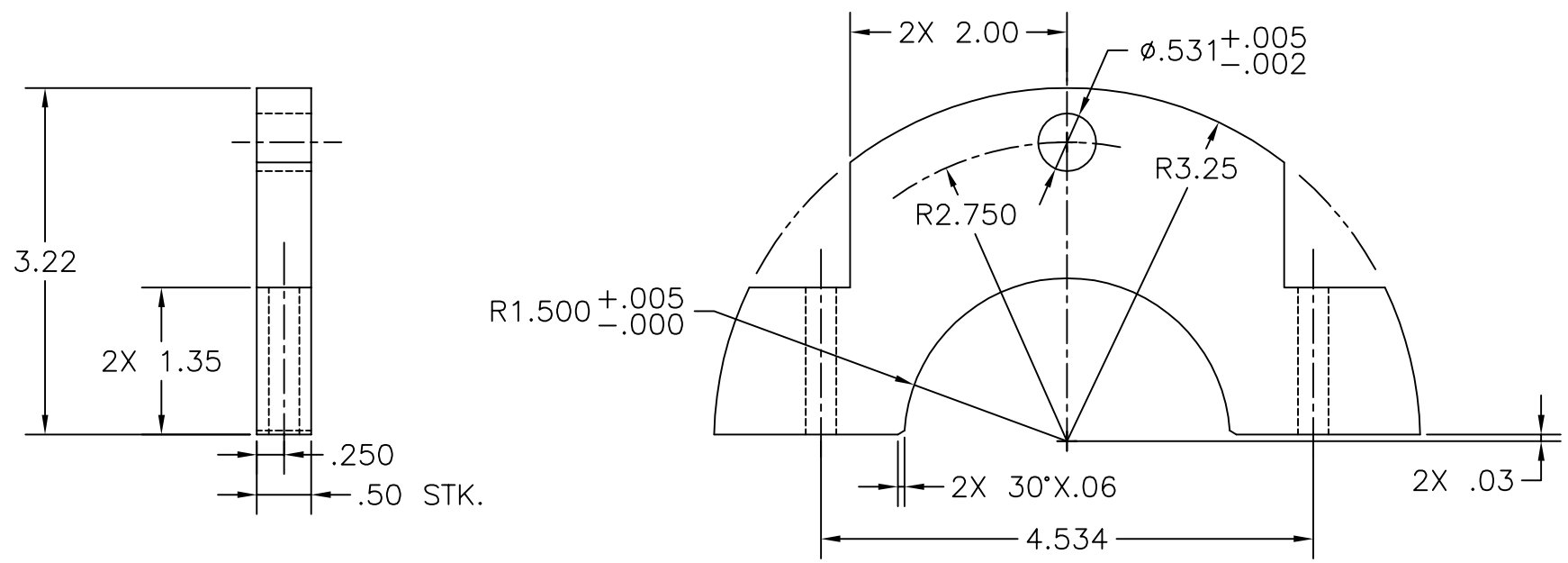

		OUTSTANDING ECN NUMBERS	INTERPRET IN GENERAL ACCORDANCE WITH ASME Y14.24M–1989	RHIC			BROOKHAVEN NATIONAL LABORATORY UPTON, N.Y. 11973
			UNLESS OTHERWISE SPECIFIED	DRAWN BY	BOHNENBLUSCH	12/9/98	TITLE: PHENIX BEAMLINE SUPPORT BELLOWS CLAMP TOP
			DIMENSIONS ARE IN INCHES DECIMAL TOLERANCES .X ± .06 .XX ± .02 .XXX ± .005 ANGULAR TOLERANCE ± 1°	DESIGN APPROVAL			
				CHECKED BY			
				ENGINEER APPROVAL			
				SUPERVISOR APPROVAL			
002–0503–047	1			Q.A. APPROVAL			SIZE C · DRAWING NUMBER: 002–0503–045 · REV. A
USED ON DRAWING NO.	QTY. PER ASS'Y.		125 FINISH · BREAK SHARP EDGES				
APPLICATION			MAX. .03 MIN. .01				Q.A. CATEGORY: A–3 · SCALE: 1/1 · WEIGHT: NA · SHEET 1 OF 1

DWG NO 002–0503–045 · SHT 1 OF 1 · REV A