NOTES:
1. IDENTIFY PART NO. IN ACCORDANCE WITH MIL-STD-130.

REVISIONS							
REV	ZONE	ECN NO.	DESCRIPTION	BY	DATE	CKR	APP
A			INITIAL RELEASE				

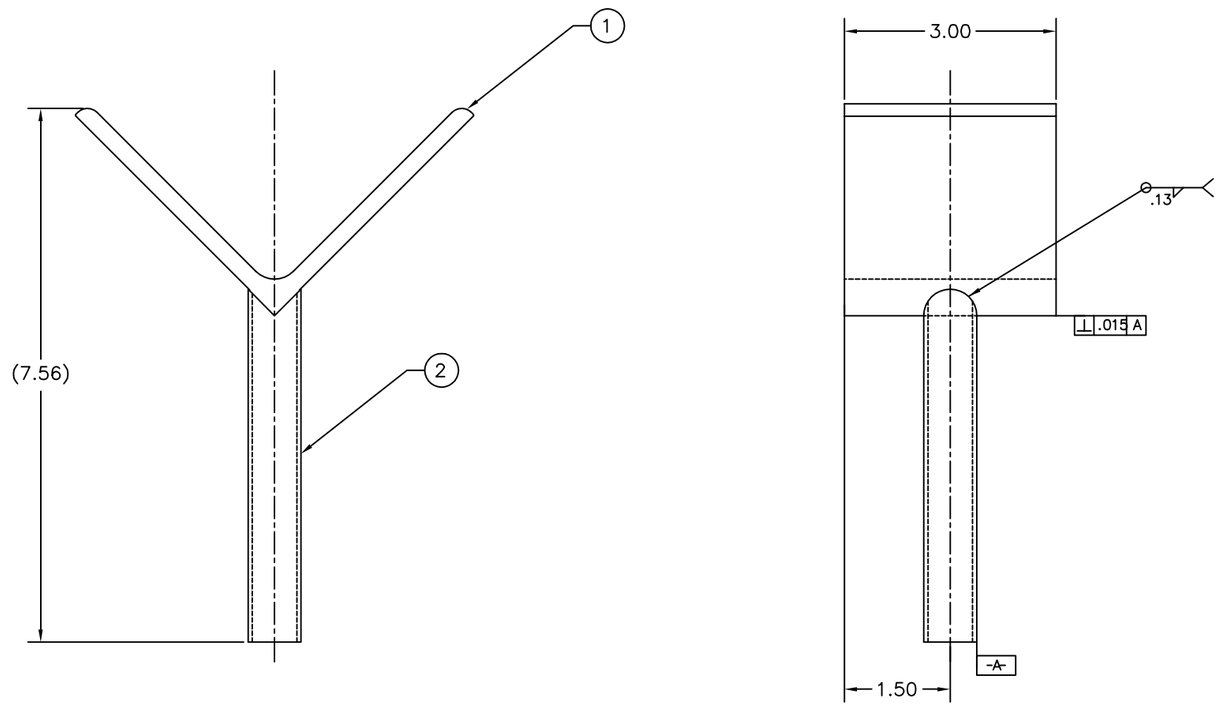

QUANTITY	ITEM NO.	PART NUMBER	DESCRIPTION	REMARKS
1	2	002-0503-035	SUPPORT ADJUSTMENT ROD	
1	1		ANGLE, 4X4X.25	TYPE 304 SST

BILL OF MATERIALS

USED ON DRAWING NO.	QTY. PER ASS'Y.
002-0503-038	1

APPLICATION

OUTSTANDING ECN NUMBERS

INTERPRET IN GENERAL ACCORDANCE WITH ASME Y14.24M-1989

UNLESS OTHERWISE SPECIFIED

DIMENSIONS ARE IN INCHES
DECIMAL TOLERANCES
.X ± .06
.XX ± .02
.XXX ± .005
ANGULAR TOLERANCE ± 1°

125 FINISH

BREAK SHARP EDGES
MAX. .03 MIN. .01

RHIC

DRAWN BY	BOHNENBLUSCH	11/18/98
DESIGN APPROVAL		
CHECKED BY		
ENGINEER APPROVAL		
SUPERVISOR APPROVAL		
Q.A. APPROVAL		

BROOKHAVEN NATIONAL LABORATORY
UPTON, N.Y. 11973

TITLE:
PHENIX
BEAMLINE SUPPORT
SLIDING B/L SUPPORT WELDMENT

SIZE: D
DRAWING NUMBER: 002-0503-036
REV.: A

Q.A. CATEGORY: A-3
SCALE: 1/1
WEIGHT: NA
SHEET 1 OF 1

DWG NO. 002-0503-036
SHT 1 OF 1
REV A