NOTES:

1. TO BE USED WHEN MMS MOVED OUT TO ASSEMBLY HALL.
2. INSTALL INSERTS (ITEM 8) IN COPPER NOSE CONE PER MS33537.

REVISIONS							
REV	ZONE	ECN NO.	DESCRIPTION	BY	DATE	CKR	APP
A			INITIAL RELEASE				

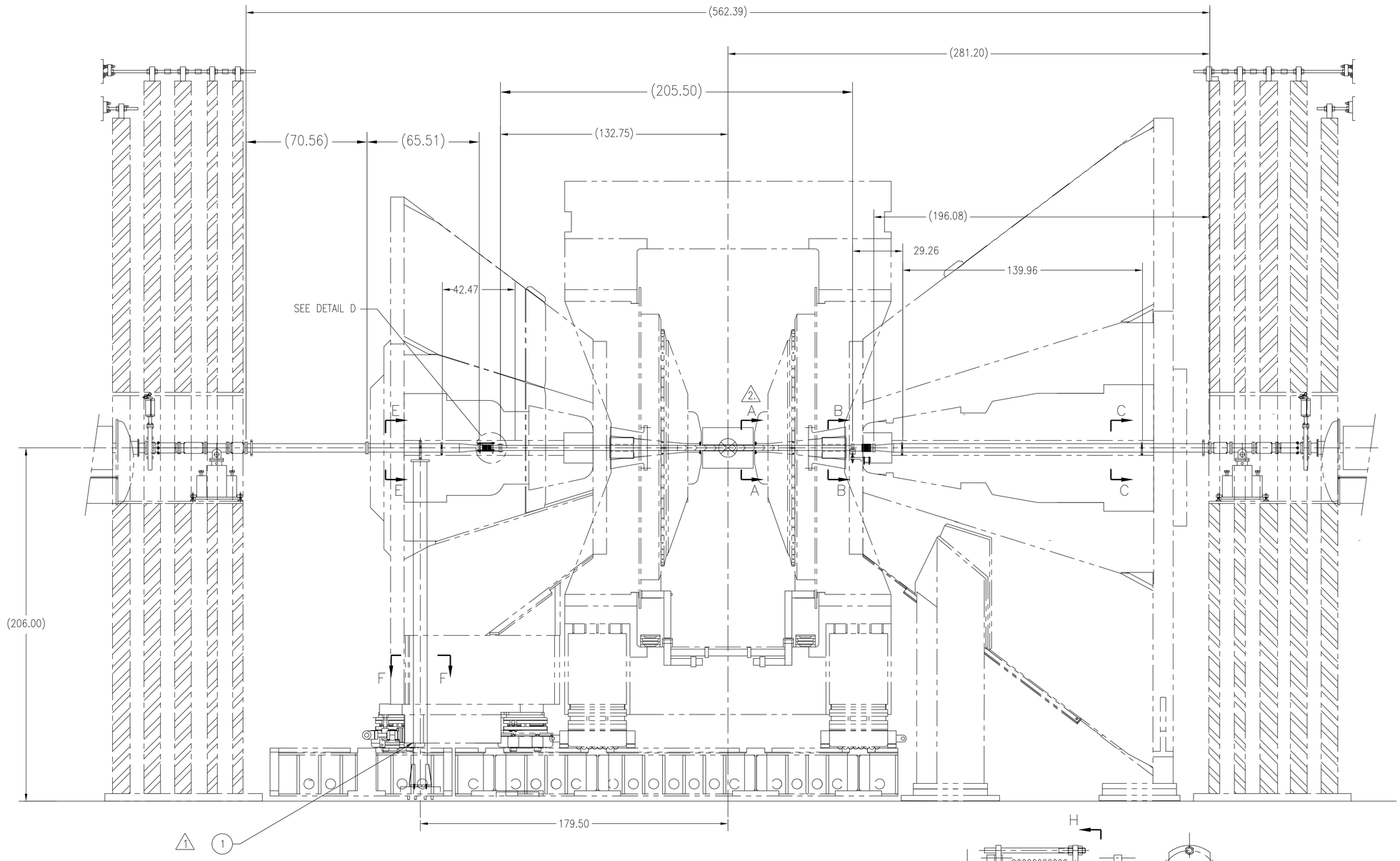

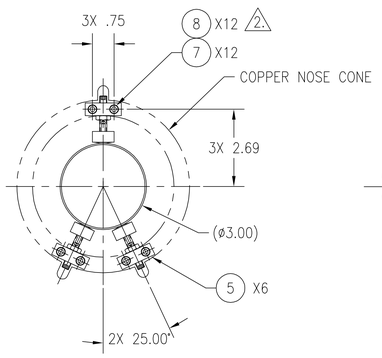

SECTION A–A
SCALE 1/2

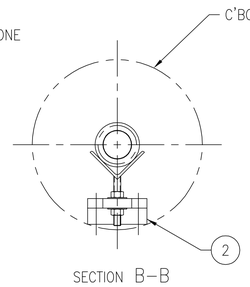

SECTION B–B
SCALE 1/4

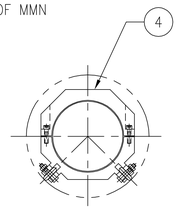

SECTION C–C
SCALE 1/4

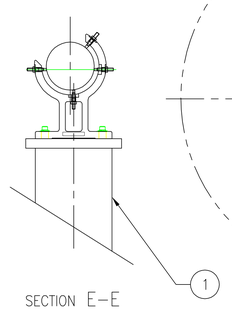

SECTION E–E
SCALE 1/4

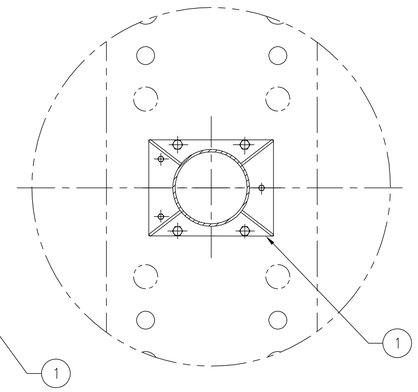

SECTION F–F
SCALE 1/4

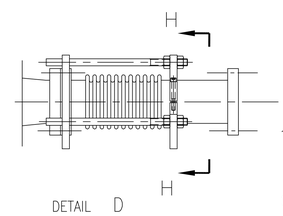

DETAIL D
SCALE 1/4

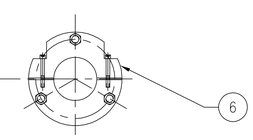

SECTION H–H
SCALE 1/4

QUANTITY	ITEM NO.	PART NUMBER	DESCRIPTION	REMARKS
12	8	MS124695	INSERT, HELICAL COIL	.190–32 X .285
12	7	T–95656	SCR, CAP, SOCKET HD, SST	#10–32 X 5/8
1	6	002–0503–047	BELLOWS SUPPORT SPREADER ASSY	
6	5	002–0503–049	LEVELING FOOT ASSY	
3	4	002–0503–042	5" DIA CLAMP ASSY	
	3			
1	2	002–0503–038	SLIDING B/L SUPPORT ASSY	
1	1	002–0503–032	STAND ASSY	

BILL OF MATERIALS

OUTSTANDING ECN NUMBERS	INTERPRET IN GENERAL ACCORDANCE WITH ASME Y14.24M–1989	RHIC	BROOKHAVEN NATIONAL LABORATORY UPTON, N.Y. 11973
	UNLESS OTHERWISE SPECIFIED	DRAWN BY: S.M./J.B. 10/13/98	TITLE: PHENIX BEAM LINE SUPPORT
	DIMENSIONS ARE IN INCHES DECIMAL TOLERANCES .X ± .06 .XX ± .02 .XXX ± .005 ANGULAR TOLERANCE ± 1°	DESIGN APPROVAL / CHECKED BY / ENGINEER APPROVAL / SUPERVISOR APPROVAL / Q.A. APPROVAL	SIZE E / DRAWING NUMBER: 002–0503–026 / REV. A
	NA / FINISH — BREAK SHARP EDGES MAX. .03 MIN. .01		Q.A. CATEGORY: A–3 / SCALE: 1/24 / WEIGHT: NA / SHEET 1 OF 1

DWG NO 002–0503–026 SHT 1 OF 1 REV A