ETQS matrix element and the sign reversal of the Sivers function

(A. Metz, Temple University, Philadelphia)

- (Transverse) single spin asymmetries (SSAs) in pp- and in lp-collisions
- Transverse momentum dependent parton distributions (TMDs) and 3-D nucleon structure
- Addressing TMDs in experiment
- Moments of TMDs
- Moments of TMDs in $p\,p \to l^{\pm} X$ and in $l\,p \to \mathrm{jet}\,X$
- Summary

Transverse SSA in $p\,p^{\uparrow} \to \pi\, X$

$$A_N = \frac{d\sigma^{\uparrow} - d\sigma^{\downarrow}}{d\sigma^{\uparrow} + d\sigma^{\downarrow}} \qquad x_F = \frac{2P_{hL}}{\sqrt{s}}$$

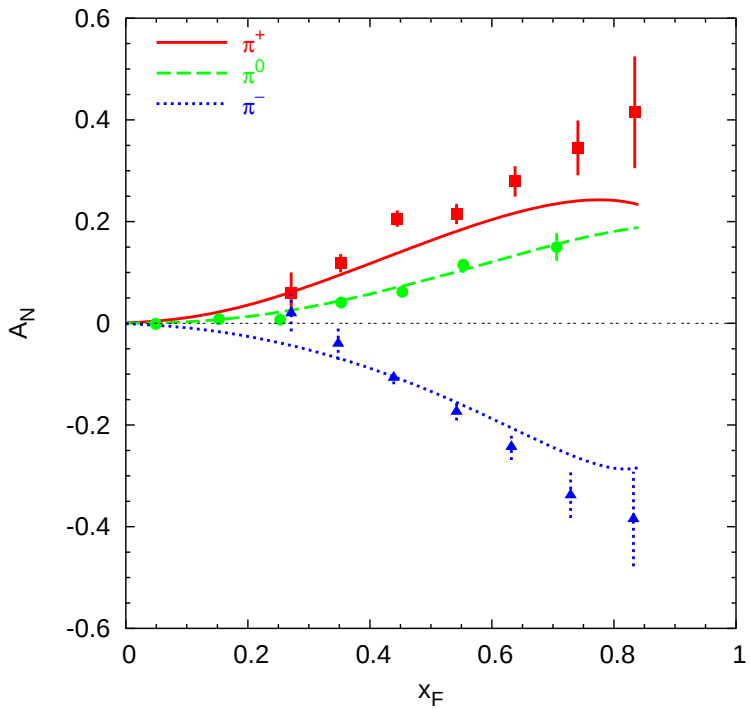

FermiLab, E704, 1990 $\sqrt{s} = 20\,\mathrm{GeV}$

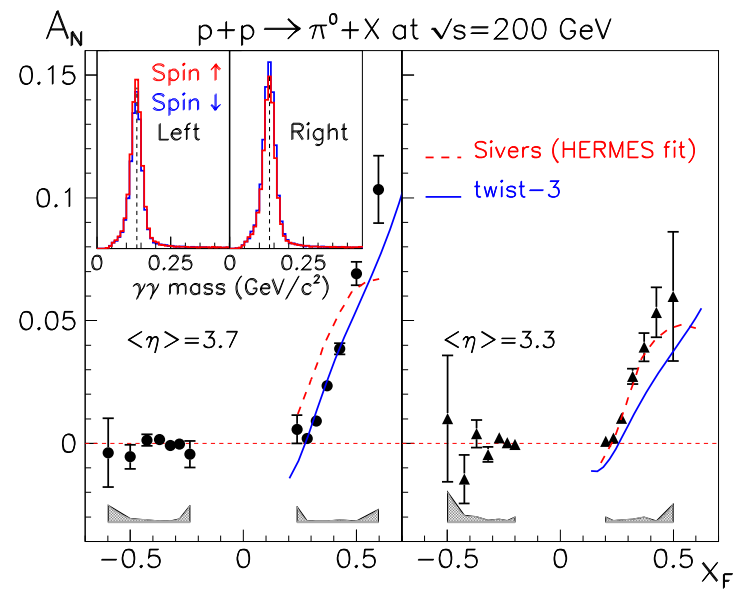

RHIC, STAR, 2008 $\sqrt{s} = 200\,\mathrm{GeV}$

Collinear parton model: $A_N \propto \alpha_s\, m_q/p_T$ (Kane, Pumplin, Repko, 1978)

$\longrightarrow$ How can one understand these effects in QCD ? (Efremov, Teryaev, 1984)

Transverse SSA in $l\,p^{\uparrow} \longrightarrow l\,H\,X$

Sivers asymmetry (HERMES, 2007)

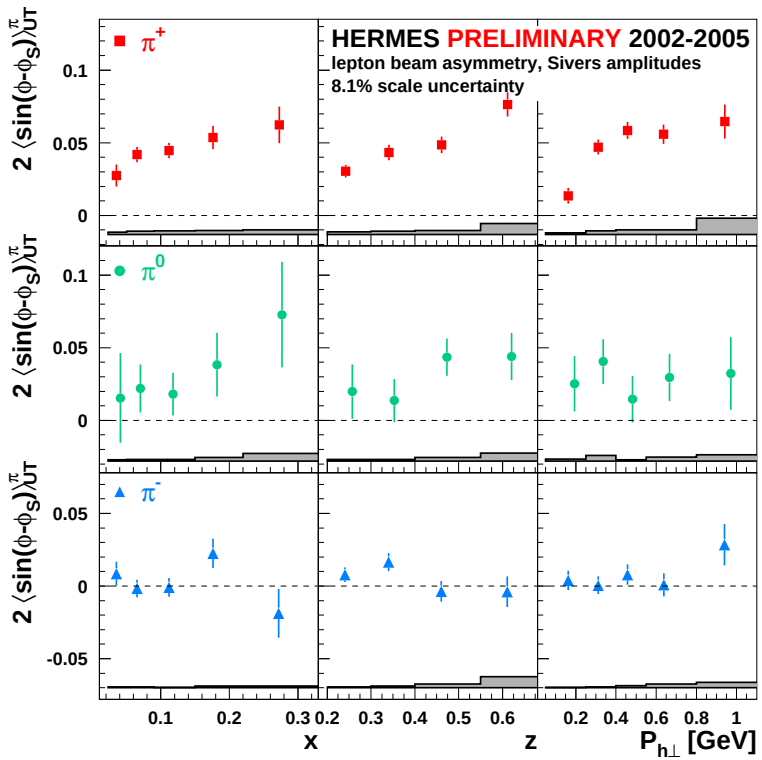

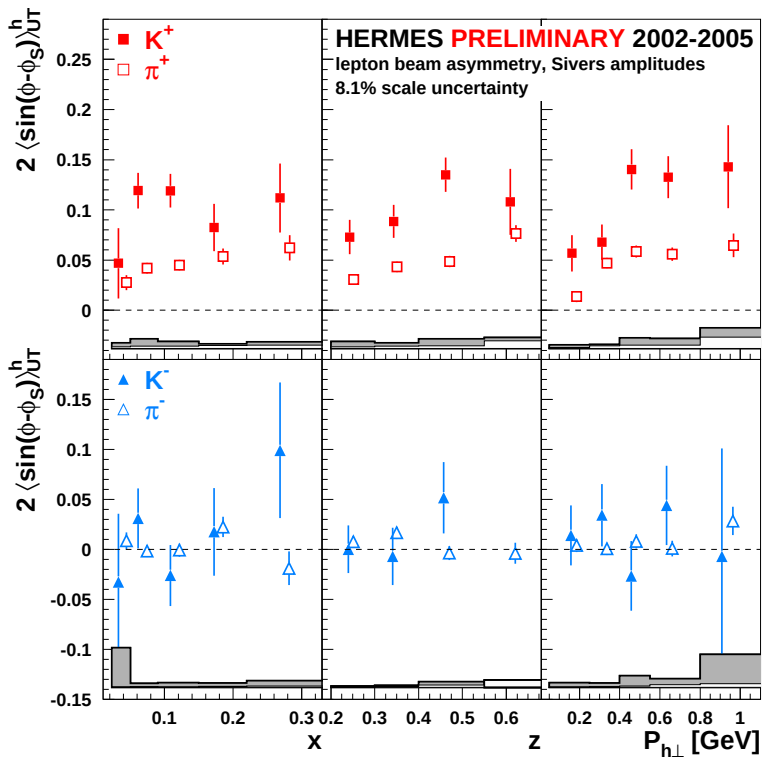

$\longrightarrow$ Also other nonzero single spin effects observed

$\longrightarrow$ Related measurements/results from COMPASS and JLab

$\longrightarrow$ How can one understand these effects in QCD ? (Sivers, 1989)

SSAs pose challenge and provide opportunity at the same time

Forward Parton Distribution Functions (PDFs)

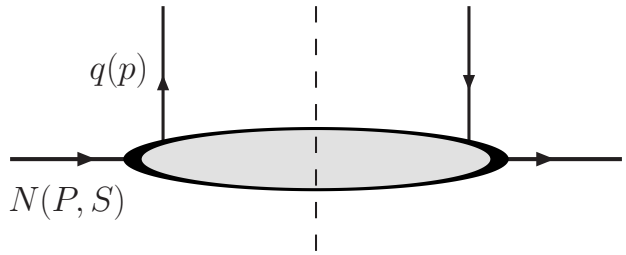

- Unpolarized PDF: unpolarized quarks in unpolarized nucleon

$$f_1^q(x) = \frac{1}{2}\int \frac{d\xi^-}{2\pi}\, e^{ip\cdot\xi}\, \langle P;S|\, \bar{\psi}^q(0)\, \gamma^+\, \mathcal{W}_{PDF}\, \psi^q(\xi)\, |P;S\rangle \Big|_{\xi^+=\xi_T=0}$$

- Helicity PDF: long. polarized quarks in long. polarized nucleon

$$\lambda\, \langle\, |\, \bar{\psi}^q\, \gamma^+ \gamma_5\, \psi^q\, |\, \rangle \sim \lambda\, \Lambda\, g_1^q(x) \quad \longrightarrow \quad \text{spin-spin correlation}$$

- Transversity PDF: transv. polarized quarks in transv. polarized nucleon

$$s_T^i\, \langle\, |\, \bar{\psi}^q\, i\sigma^{i+} \gamma_5\, \psi^q\, |\, \rangle \sim \vec{s}_T \cdot \vec{S}_T\, h_1^q(x) \quad \longrightarrow \quad \text{spin-spin correlation}$$

$\longrightarrow$ Transversity decouples from inclusive DIS (chiral-odd)

Transverse Momentum Dependent Parton Distributions (TMDs)

- TMD-correlator

$$\Phi^q = \frac{1}{2}\int \frac{d\xi^-}{2\pi}\frac{d^2\vec{\xi}_T}{(2\pi)^2}\, e^{ip\cdot\xi}\, \langle P;S|\, \bar{\psi}^q(0)\,\gamma^+\,\mathcal{W}_{TMD}\,\psi^q(\xi)\,|P;S\rangle\,\Big|_{\xi^+=0}$$

$$= f_1^q(x,\vec{p}_T^{\,2}) + \frac{(\vec{S}_T\times\vec{p}_T)\cdot\hat{P}}{M}\, f_{1T}^{\perp q}(x,\vec{p}_T^{\,2})$$

  - Partonic nucleon structure beyond collinear approximation (3D-structure)
  - Sivers function $f_{1T}^{\perp}$ describes strength of spin-orbit correlation
  - Spin asymmetry on the level of parton distribution
    $\longrightarrow$ asymmetry in observables (e.g., Sivers SSA observed by HERMES)
  - p_T compensated by hadronic scale (M) $\longrightarrow$ no suppression!

- Leading twist: overview

$$\langle\, |\, \bar{\psi}^q\, \gamma^+\, \psi^q\, |\, \rangle \quad \sim \quad f_1^q - \frac{\varepsilon_T^{ij}\, p_T^i\, S_T^j}{M}\, f_{1T}^{\perp q}$$

$$\lambda\, \langle\, |\, \bar{\psi}^q\, \gamma^+ \gamma_5\, \psi^q\, |\, \rangle \quad \sim \quad \lambda\, \Lambda\, g_1^q + \frac{\lambda\, \vec{p}_T \cdot \vec{S}_T}{M}\, g_{1T}^q$$

$$s_T^i\, \langle\, |\, \bar{\psi}^q\, i\sigma^{i+} \gamma_5\, \psi^q\, |\, \rangle \quad \sim \quad \vec{s_T} \cdot \vec{S}_T\, h_1^q + \frac{\Lambda\, \vec{p}_T \cdot \vec{s}_T}{M}\, h_{1L}^{\perp q} - \frac{\varepsilon_T^{ij}\, p_T^i\, s_T^j}{M}\, h_1^{\perp q}$$

$$+ \frac{1}{2M^2} \Big(2\, \vec{p}_T \cdot \vec{s}_T\, \vec{p}_T \cdot \vec{S}_T - \vec{p}_T^{\,2}\, \vec{s}_T \cdot \vec{S}_T \Big)\, h_{1T}^{\perp q}$$

  - 8 leading quark TMDs
  - 2 (naive) T-odd TMDs: $f_{1T}^{\perp q}$, $h_1^{\perp q}$
  - 4 chiral-even TMDs, and 4 chiral-odd TMDs
  - Various model calculations and very recent lattice calculation of TMDs (Hägler, Musch, Negele, Schäfer, 2009)
  - 8 leading gluon TMDs
  - Nontrivial (model-dependent) relations between TMDs and GPDs (Burkardt, 2002, ... / Lu, Schmidt, 2006 / Meissner, Metz, Goeke, 2007, ... Pasquini, Cazzaniga, Boffi, 2008 / Gamberg, Schlegel, 2009)

Addressing TMDs in experiment

- Semi-inclusive DIS $\quad l\,N \to l'\,H\,X$

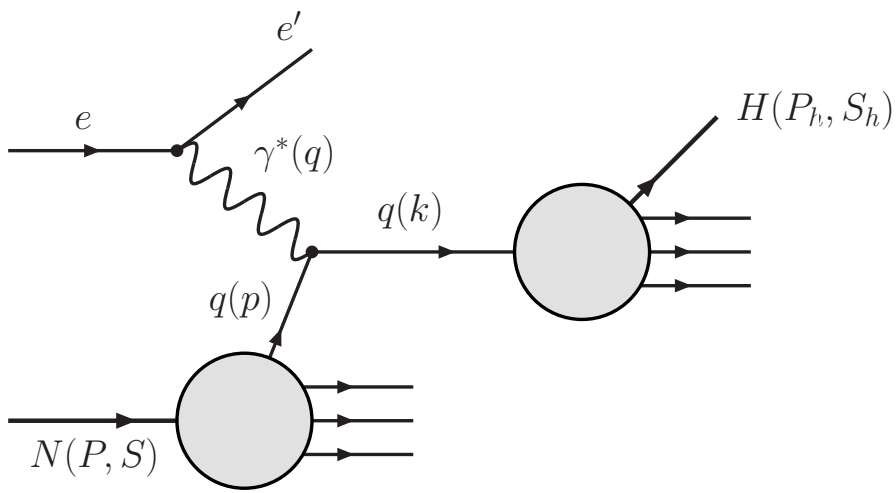

- Drell-Yan process $\quad H_1\,H_2 \to l^+\,l^-\,X$

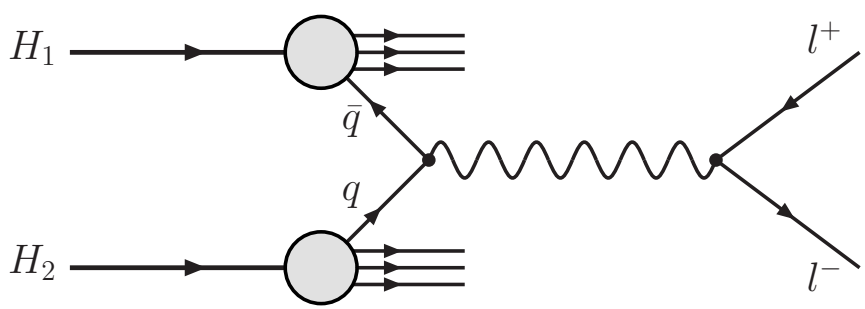

- Kinematics for semi-inclusive DIS

$$x \quad Q^2 \quad \phi_S \quad z \quad P_{h\perp} \quad \phi_h$$

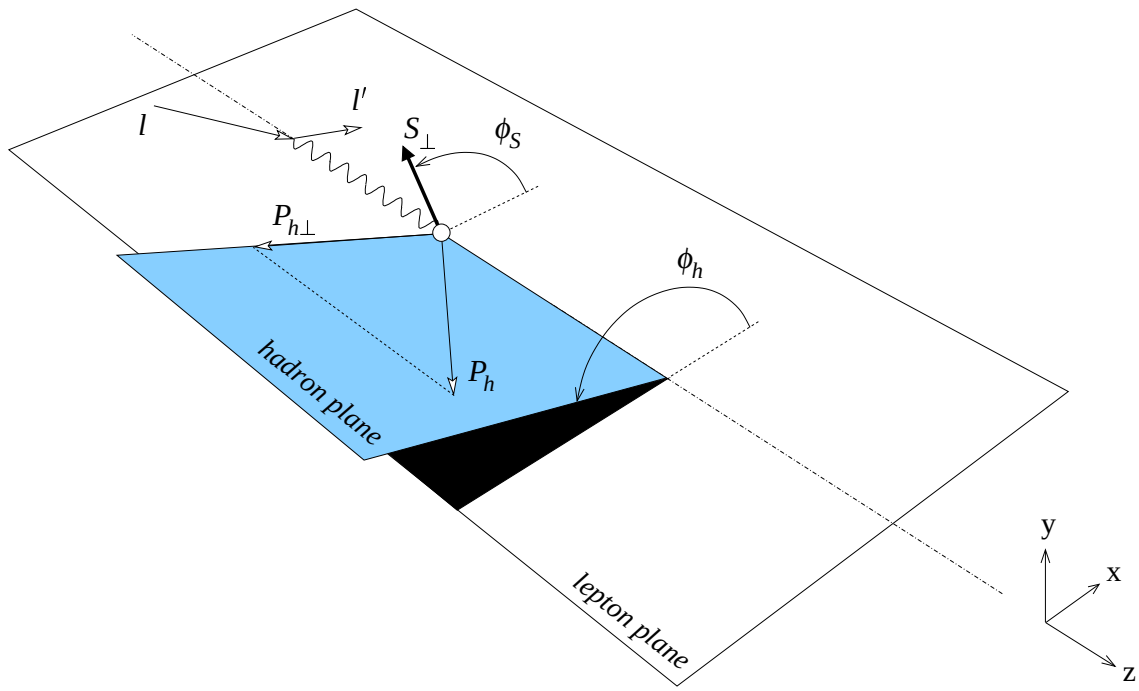

  - σ differential in $P_{h\perp}$, $P_{h\perp} \sim Q$: collinear factorization
  - σ differential in $P_{h\perp}$, $P_{h\perp} \ll Q$: TMD factorization

    Important: matching of collinear and TMD factorization for intermediate $P_{h\perp}$
    (Ji, Qiu, Vogelsang, Yuan, 2006 ... / Bacchetta, Boer, Diehl, Mulders, 2008)

- (18) Structure functions $F_i(x, Q^2, z, P_{h\perp})$ for semi-inclusive DIS
(Bacchetta, Diehl, Goeke, Metz, Mulders, Schlegel, 2006)

$$
\begin{aligned}
d^6\sigma \;\propto\; \Big\{ & F_{UU,T} + \varepsilon\, F_{UU,L} + \sqrt{2\,\varepsilon(1+\varepsilon)}\,\cos\phi_h\, F_{UU}^{\cos\phi_h} \\
& + \varepsilon\cos(2\phi_h)\, F_{UU}^{\cos 2\phi_h} + \lambda_e \sqrt{2\,\varepsilon(1-\varepsilon)}\,\sin\phi_h\, F_{LU}^{\sin\phi_h} \\
& + \Lambda \left[\sqrt{2\,\varepsilon(1+\varepsilon)}\,\sin\phi_h\, F_{UL}^{\sin\phi_h} + \varepsilon\sin(2\phi_h)\, F_{UL}^{\sin 2\phi_h} \right] \\
& + \Lambda\,\lambda_e \left[\sqrt{1-\varepsilon^2}\, F_{LL} + \sqrt{2\,\varepsilon(1-\varepsilon)}\,\cos\phi_h\, F_{LL}^{\cos\phi_h} \right] \\
& + |\vec{S}_T| \Big[\sin(\phi_h - \phi_S) \left(F_{UT,T}^{\sin(\phi_h-\phi_S)} + \varepsilon\, F_{UT,L}^{\sin(\phi_h-\phi_S)} \right) \\
& + \varepsilon\,\sin(\phi_h + \phi_S)\, F_{UT}^{\sin(\phi_h+\phi_S)} + \varepsilon\,\sin(3\phi_h - \phi_S)\, F_{UT}^{\sin(3\phi_h-\phi_S)} \\
& + \sqrt{2\,\varepsilon(1+\varepsilon)}\,\sin\phi_S\, F_{UT}^{\sin\phi_S} + \sqrt{2\,\varepsilon(1+\varepsilon)}\,\sin(2\phi_h - \phi_S)\, F_{UT}^{\sin(2\phi_h-\phi_S)} \Big] \\
& + |\vec{S}_T|\,\lambda_e \Big[\sqrt{1-\varepsilon^2}\,\cos(\phi_h - \phi_S)\, F_{LT}^{\cos(\phi_h-\phi_S)} + \sqrt{2\,\varepsilon(1-\varepsilon)}\,\cos\phi_S\, F_{LT}^{\cos\phi_S} \\
& + \sqrt{2\,\varepsilon(1-\varepsilon)}\,\cos(2\phi_h - \phi_S)\, F_{LT}^{\cos(2\phi_h-\phi_S)} \Big] \Big\}
\end{aligned}
$$

- TMD-factorization in parton model
  (Ralston, Soper, 1979)

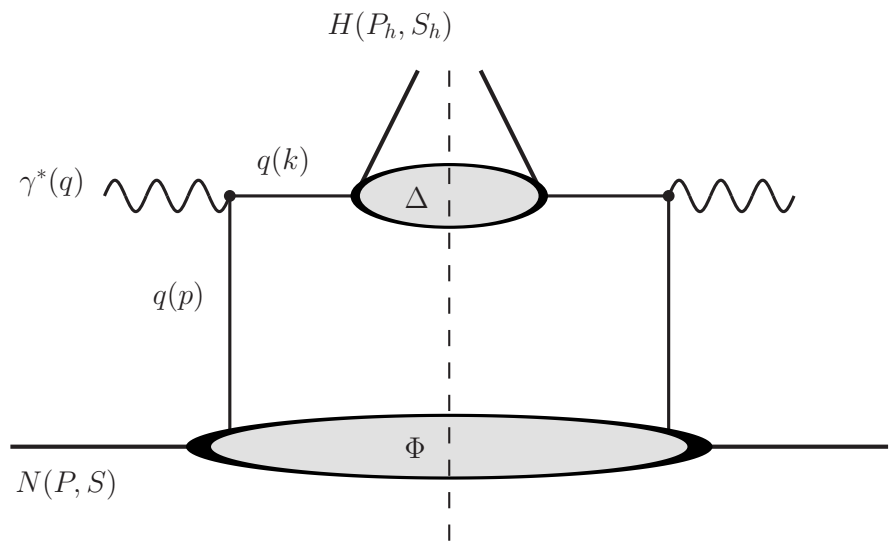

$$\frac{d\sigma_{unp}}{d^3\vec{l}'\, d^3\vec{P}_h} \propto \sum_q e_q^2 \int d^2\vec{p}_T\, d^2\vec{k}_T\, f_1^q(x, \vec{p}_T^{\,2})\, D_1^{q/H}(z, \vec{k}_T^{\,2})\, \delta^{(2)}(\vec{p}_T - \vec{k}_T - \vec{P}_{h\perp}/z) + \ldots$$

- $\vec{p}_T$ and $\vec{k}_T$ are convoluted
- No convolution for jet-production $\longrightarrow$ direct sensitivity to $\vec{p}_T$

- TMD-factorization beyond tree level
  (Collins, Soper, 1981 / Collins, Soper, Sterman, 1985 / Ji, Ma, Yuan, 2004 / Collins, Metz, 2004)

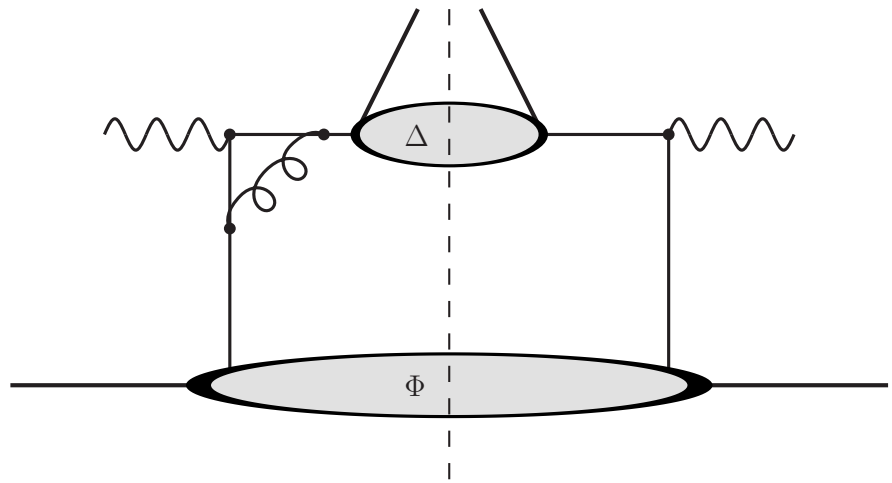

$$\frac{d\sigma_{unp}}{d^3\vec{l}'\, d^3\vec{P}_h} \propto \sum_q e_q^2 \int d^2\vec{p}_T\, d^2\vec{k}_T\, d^2\vec{l}_T\, f_1^q(x, \vec{p}_T^{\,2})\, D_1^{q/H}(z, \vec{k}_T^{\,2})\, S(\vec{l}_T^{\,2})$$
$$\times\, H\, \delta^{(2)}(\vec{p}_T - \vec{k}_T + \vec{l}_T - \vec{P}_{h\perp}/z) + \ldots$$

  - Soft factor S due to uncanceled soft gluon emission
  - S is flavor- and spin-blind, and universal (Collins, Metz, 2004)
  - Currently no TMD-factorization beyond leading twist known
    (Gamberg, Hwang, Metz, Schlegel, 2006 / Bacchetta, Boer, Diehl, Mulders, 2008)

- Leading twist TMDs in semi-inclusive DIS

$$\sigma_{UU}: \quad f_1 \otimes D_1 \qquad \cos(2\phi_h)\, h_1^\perp \otimes H_1^\perp$$

$$\sigma_{LL}: \quad g_1 \otimes D_1$$

$$\sigma_{LT}: \quad \cos(\phi_h - \phi_S)\, g_{1T} \otimes D_1$$

$$\sigma_{UL}: \quad \sin(2\phi_h)\, h_{1L}^\perp \otimes H_1^\perp$$

$$\sigma_{UT}: \quad \sin(\phi_h - \phi_S)\, f_{1T}^\perp \otimes D_1 \qquad \sin(\phi_h + \phi_S)\, h_1 \otimes H_1^\perp$$

$$\sin(3\phi_h - \phi_S)\, h_{1T}^\perp \otimes H_1^\perp$$

  - $H_1^\perp$: Collins fragmentation function (Collins, 1992)
  - Complete experiment for TMDs possible
  - Various observables already studied at COMPASS, HERMES, JLab
  - Potential future Electron Ion Collider would be ideal for TMD-studies (larger kinematical coverage, larger luminosity)

- Sivers function from data on semi-inclusive DIS (Anselmino et al., 2008)

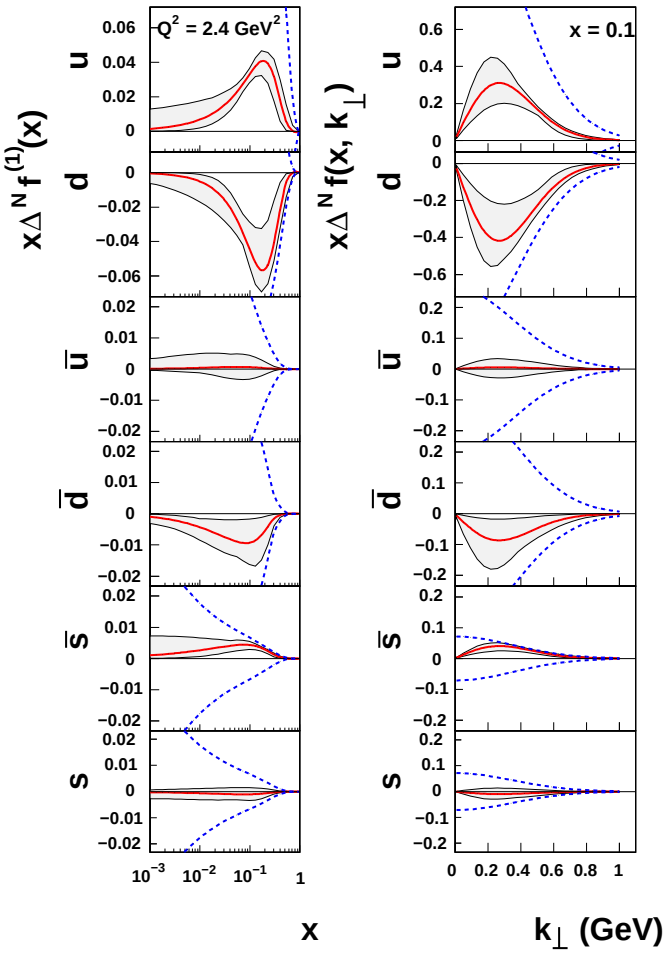

  - Effects for u and d quark roughly equal in magnitude but opposite in sign, in agreement with large N_c-prediction (Pobylitsa, 2003)
  - Antiquark Sivers functions small, but effect for $\bar{s}$ nonzero

- 3-D structure of the nucleon: dipole pattern due to Sivers effect $(x = 0.2)$

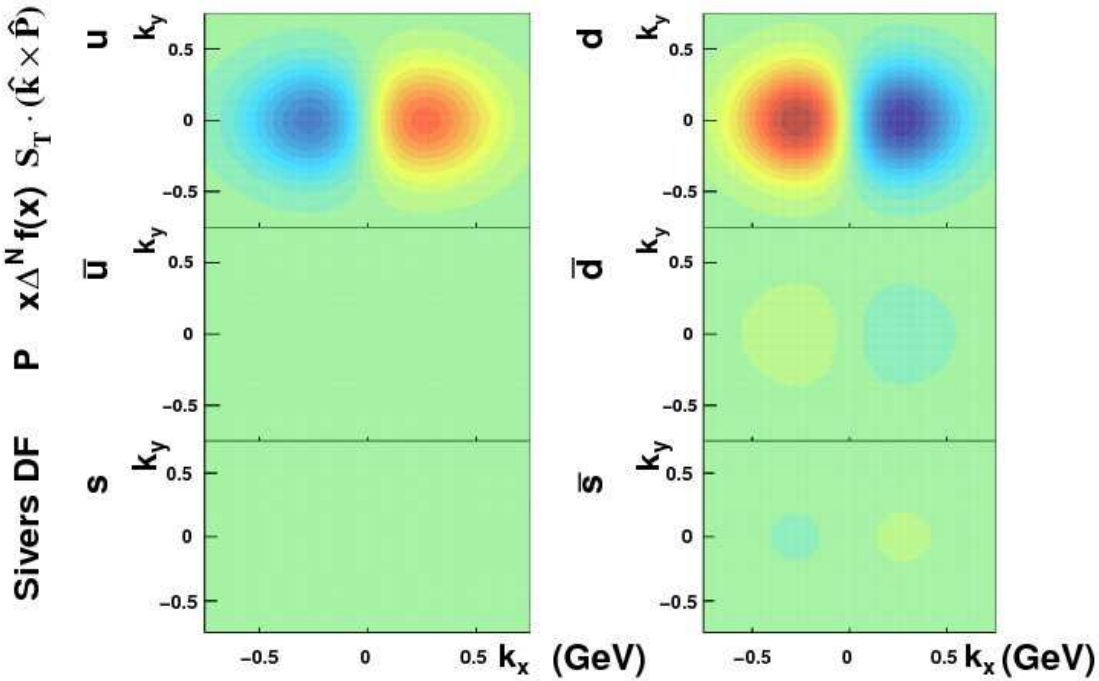

(Plot from Prokudin)

– Very fascinating aspect of the TMD-field !

Big task: pin down multipole patterns associated with 5 TMDs

Moments of TMDs

- TMDs in full glory QCD

$$F(x, \vec{p}_T^{\,2}; \bar{\mu}, \zeta)$$

  - $\bar{\mu}$: due to UV-divergence ($\bar{\mu}$-dependence different from DGLAP evolution)
  - ζ: due to rapidity-divergence (ζ-dependence given by Collins-Soper evolution)

- Moments of TMDs (trivial case)

$$f_1(x, \mu) = \int^{\mu} d^2\vec{p}_T \, f_1(x, \vec{p}_T^{\,2})$$

  - Rapidity divergences cancel between real and virtual graphs (Collins, Soper, 1981)
  - Likewise for $g_1(x, \vec{p}_T^{\,2})$ and $h_1(x, \vec{p}_T^{\,2})$

- 3-parton qgq-correlator (twist-3)

$$\Phi_F^q(x,x') \sim \int d\xi^- d\zeta^- \, e^{ip\cdot\xi} \, e^{i(p-p')\cdot\zeta} \times \langle P;S| \, \bar{\psi}^q(0) \, \Gamma \, F^{+i}(\zeta) \, \psi^q(\xi) \, |P;S\rangle \Big|_{\xi^+=\xi_T=\zeta^+=\zeta_T=0}$$

  - 4 independent (leading) functions for $\Gamma = \{\gamma^+, \ \gamma^+\gamma_5, \ i\sigma^{i+}\gamma_5\}$ (Jaffe, Ji, 1992)
  - relevant for the physics of g_2

- Moments of TMDs (nontrivial case) (relevant for SSAs in, e.g., $pp^\uparrow \to \pi X$) (Boer, Mulders, Pijlman, 2003 / Zhou, Yuan, Liang, 2008)

$$f_{1T}^{\perp(1)}(x;\mu) \sim \int^\mu d^2\vec{p}_T \, \vec{p}_T^{\,2} \, f_{1T}^\perp(x,\vec{p}_T^{\,2}) \sim T_F(x,x;\mu)$$

$$h_1^{\perp(1)}(x;\mu) \sim T_F^{(\sigma)}(x,x;\mu)$$

  - $T_F(x,x)$ represents ETQS matrix element (Efremov, Teryaev, 1984 / Qiu, Sterman, 1991, ...)
  - Similarly for $g_{1T}^{(1)}$ and $h_{1L}^{\perp(1)}$
  - Moment of $h_{1T}^\perp$ related to 4-parton correlator

- SSAs in $p\,p^{\uparrow} \to H\,X$ in terms of $T_F(x,x)$

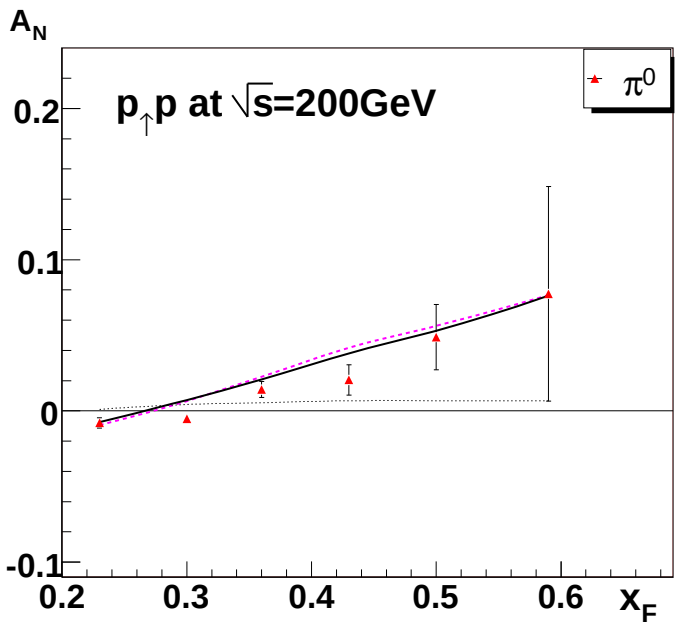

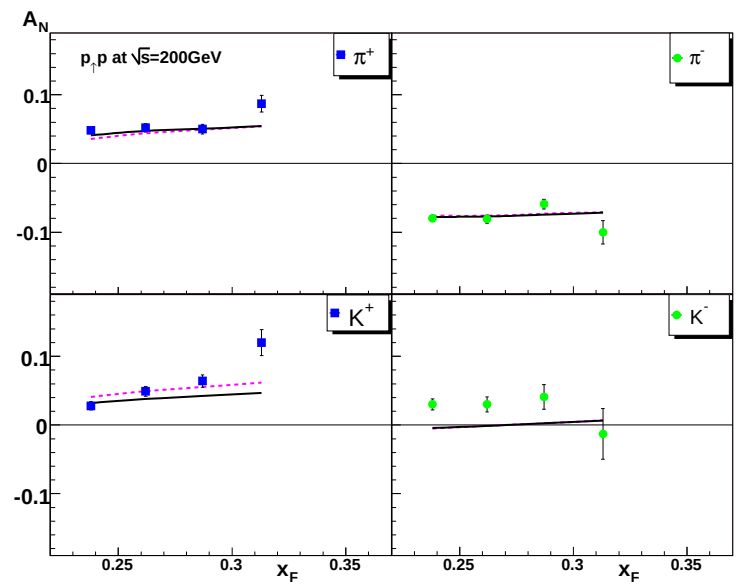

(Kouvaris, Qiu, Vogelsang, Yuan, 2006)

- Calculation in twist-3 collinear factorization
- Reasonable description of data on A_N
- Extraction of $T_F(x,x)$ (also by Koike et al, 2010)

Color gauge invariance and sign-reversal of T-odd TMDs

1. Forward parton distributions

$$\int d\xi^- \, e^{ip^+\xi^-} \, \langle \, | \, \bar{\psi}(0) \, \Gamma \, \mathcal{W}_{PDF}(0;\xi^-) \, \psi(\xi^-) \, | \, \rangle$$

$$\mathcal{W}_{PDF}(0;\xi^-) = \mathcal{P} \exp\Big(- ig \int_0^{\xi^-} d\eta^- \, A^+(0,\eta^-,\vec{0}_T) \Big)$$

Gauge-link generated by rescattering (FSI and/or ISI) (reduces to 1 for $A^+ = 0$)

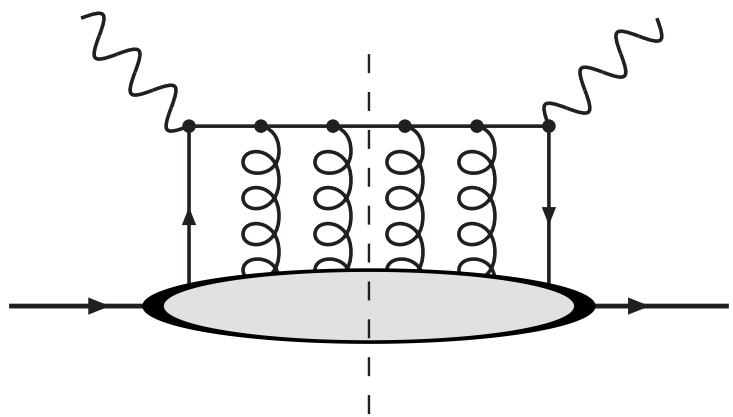

2. TMDs

$$\int d\xi^- d^2\vec{\xi}_T \, e^{i(p^+\xi^- - \vec{p}_T\cdot\vec{\xi}_T)} \, \langle \, | \, \bar{\psi}(0) \, \Gamma \, \mathcal{W}_{TMD}(0, \vec{0}_T; \xi^-, \vec{\xi}_T) \, \psi(\xi^-, \vec{\xi}_T) \, | \, \rangle$$

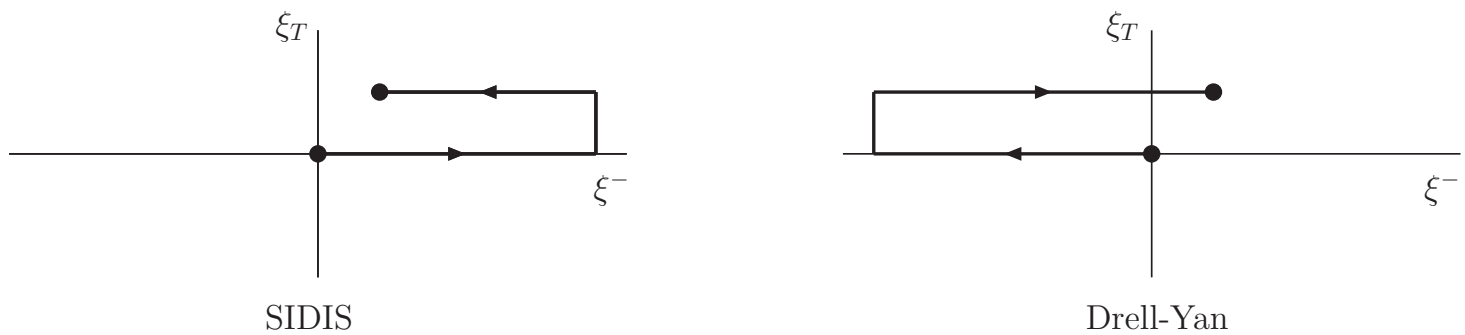

- $\mathcal{W}_{TMD}(0, \vec{0}_T; \xi^-, \vec{\xi}_T) = [0, \vec{0}_T; \infty, \vec{0}_T] \times [\infty, \vec{0}_T; \infty, \vec{\xi}_T] \times [\infty, \vec{\xi}_T; \xi^-, \vec{\xi}_T]$
  (Belitsky, Ji, Yuan, 2002)

- T-odd TMDs ($f_{1T}^\perp$, $h_1^\perp$) nonzero only if Wilson-lines (final/initial state interactions) taken into account
  (Brodsky, Hwang, Schmidt, 2002 / Collins, 2002)

- Different links for semi-inclusive DIS and Drell-Yan $\longrightarrow$ Universality?
  Time-reversal: $f_{1T}^\perp\big|_{DY} = -f_{1T}^\perp\big|_{DIS}$ $\qquad$ $h_1^\perp\big|_{DY} = -h_1^\perp\big|_{DIS}$
  (Collins, 2002)

Sign reversal of the Sivers function

- Prediction based on operator definition (Collins, 2002)

$$f_{1T}^{\perp}\big|_{DY} = -\, f_{1T}^{\perp}\big|_{DIS}$$

- What if sign reversal of $f_{1T}^{\perp}$ is not confirmed by experiment ?
  - Would not imply that QCD is wrong
  - Would imply that SSAs not understood in QCD
  - Problem with TMD-factorization
  - Problem with resummation of large logarithms

    $\longrightarrow$ Resummation relevant if more than one scale present

    $\longrightarrow$ CSS resummation in Drell-Yan (Collins, Soper, Sterman, 1985); resum logarithms of the type

$$\alpha_s^k \ln^{2k} \frac{\vec{Q}_T^2}{Q^2}$$

    $\longrightarrow$ Has also implications for Fermilab and LHC physics

Moments of TMDs in $p\,p \to l^{\pm}\,X$

- Discussion
  - Full process $\quad p\,p^{\uparrow} \to l^{-}\,\bar{\nu}_l\,X$

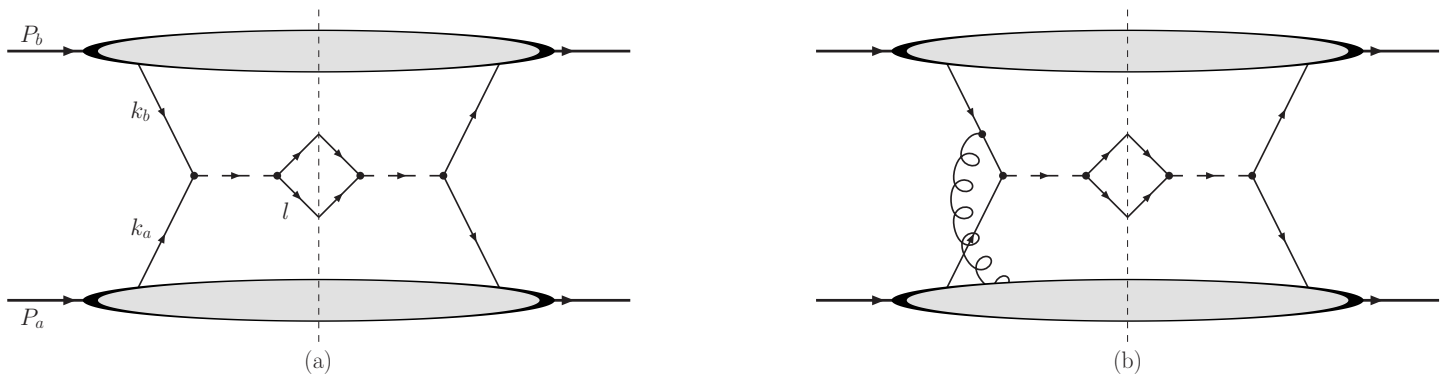

  - Might be measured at RHIC at $\sqrt{s} = 500\,\mathrm{GeV}$
  - Calculations in TMD-factorization
    Brodsky, Hwang, Schmidt, 2002 / Schmidt, Soffer, 2003 / Kang, Qiu, 2009
  - At RHIC, kinematics of W cannot be reconstructed
  - Kinematics like in, e.g., $p\,p \to \pi\,X$: Collinear twist-3 factorization
  - Observables of interest: parity-even and parity-odd SSA

$$A^{e}_{TU} \propto T_F(x,x) \sim f_{1T}^{\perp\,(1)}(x) \qquad\qquad A^{o}_{TU} \propto g_{1T}^{(1)}(x)$$

- Results (Metz, Zhou, 2010)

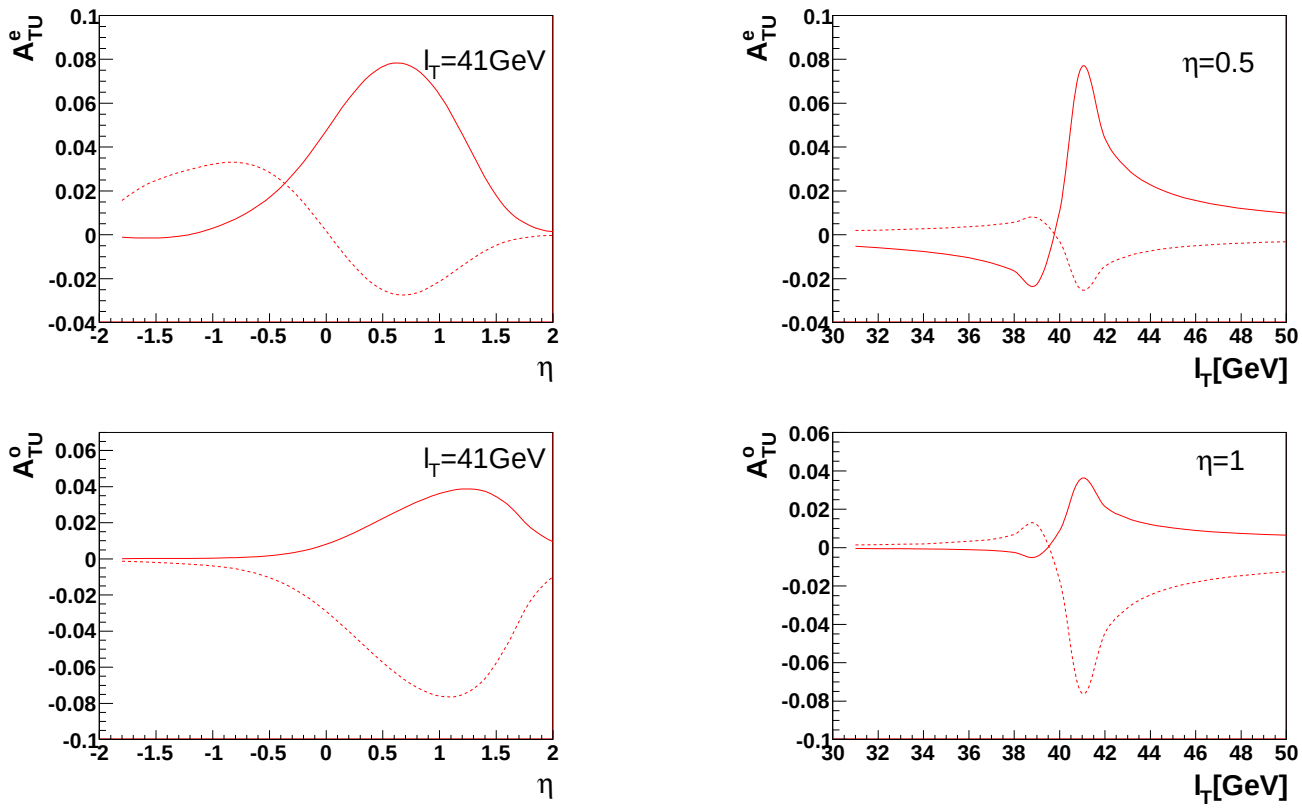

  - Both asymmetries healthy
  - For A^e_{TU}, results very similar to TMD-calculation by Kang, Qiu
  - From theoretical point of view, process simpler than $p\,p^{\uparrow} \to \pi\, X$
  - As fundamental as DY-measurement (for what concerns sign change) !

- A^e_{TU} integrated upon η and l_T

	W^- $\eta[-1,1]$	W^- $\eta[0,1]$	W^+ $\eta[-1,1]$	W^+ $\eta[0,1]$
$l_T[32,38]$	$-0.7\,\%$	$-0.9\,\%$	$0.0\,\%$	$0.3\,\%$
$l_T[40,50]$	$3.4\,\%$	$5.2\,\%$	$0.3\,\%$	$-1.4\,\%$

- Measuring A^e_{TU} (and A^o_{TU}), with sufficient accuracy, would be win-win situation

Moments of TMDs in $l\,p \to \text{jet}\,X$

- Advantages of not observing final state lepton: many data, simple kinematics
- Calculation in TMD factorization
  (Anselmino, Boglione, D'Alesio, Melis, Murgia, Prokudin, 2009)
- Calculation in collinear twist-3 factorization
  (Kang, Metz, Qiu, Zhou, in preparation)

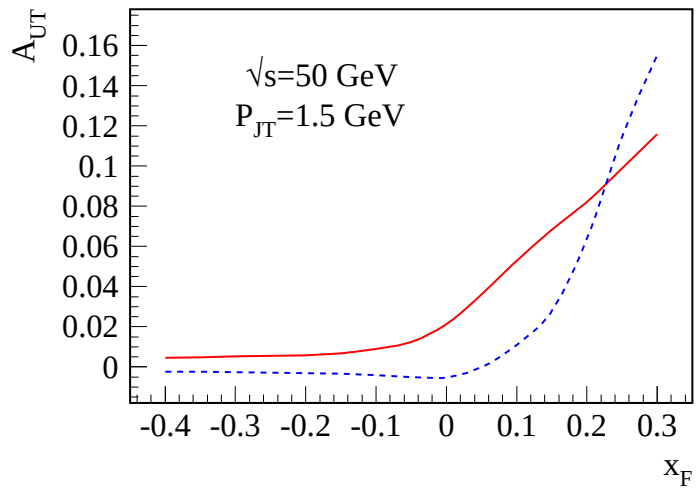

  - Asymmetry healthy
  - Easiest way to study $T_F(x,x)$ in lepton-nucleon scattering(?) (EIC-physics)
  - Higher order calculation required (should be feasible)

Summary

- TMDs provide 3-D structure of the nucleon

- Enormous progress in recent years

- TMDs can be measured (via SSAs) in, e.g., semi-inclusive DIS and Drell-Yan

- Rough qualitative understanding of quark TMDs in valence region
  (from experiment and theory)

- Moments of TMDs
  - Related to collinear twist-3 parton correlators,
    like the ETQS matrix element $T_F(x, x)$
  - Relevant for QCD-description of $p\,p^\uparrow \to \pi\, X\,, \quad l\,p^\uparrow \to \mathrm{jet}\, X\,, \ldots$

- Fundamental sign change of Sivers asymmetry may be studied in $p\,p^\uparrow \to l^\pm\, X$