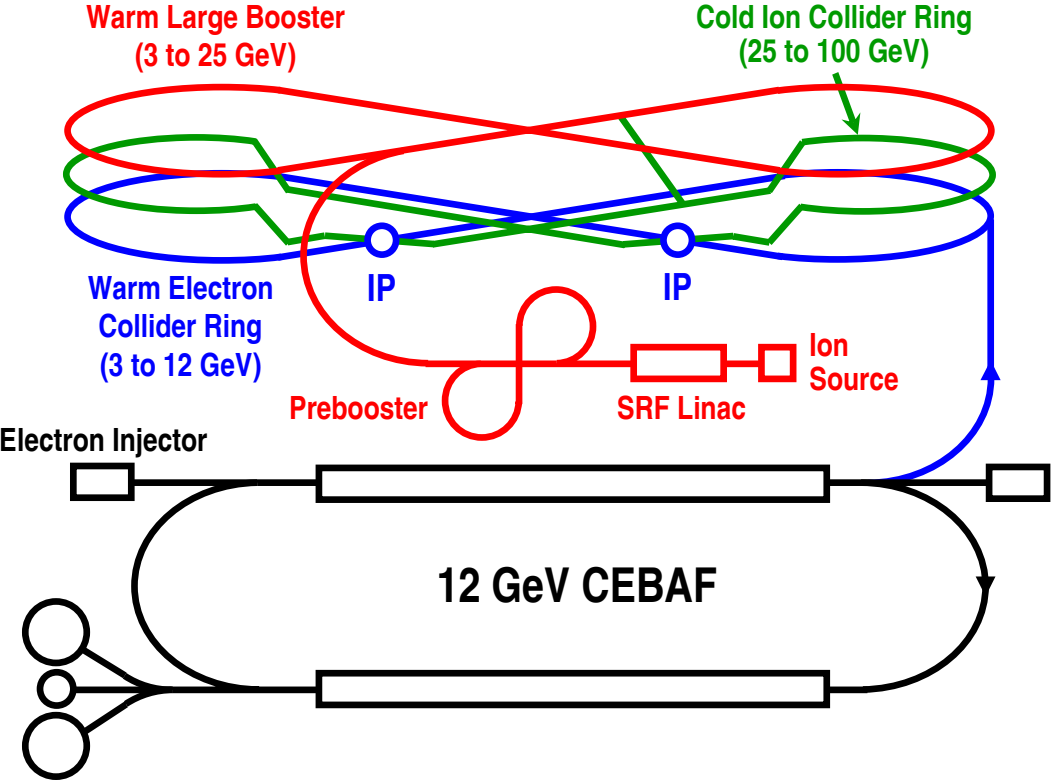
Warm Large Booster
(3 to 25 GeV)
Cold Ion Collider Ring
(25 to 100 GeV)
Warm Electron
Collider Ring
(3 to 12 GeV)
IP
IP
Ion
Source
Prebooster
SRF Linac
Electron Injector
12 GeV CEBAF