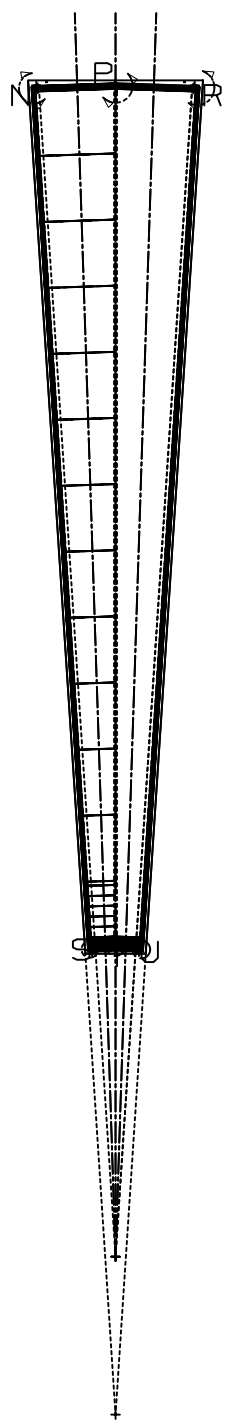

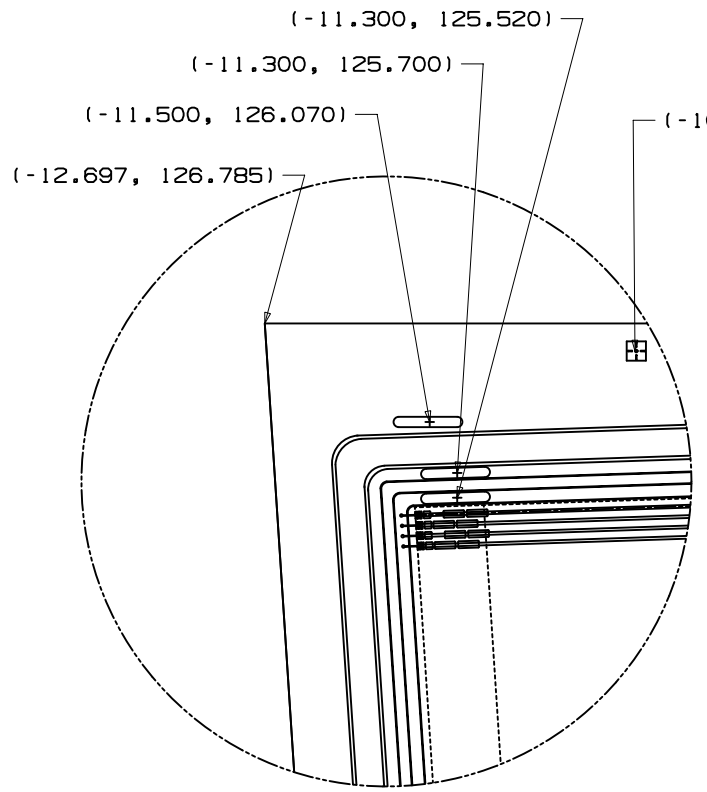

DETAIL N
SCALE 40/1

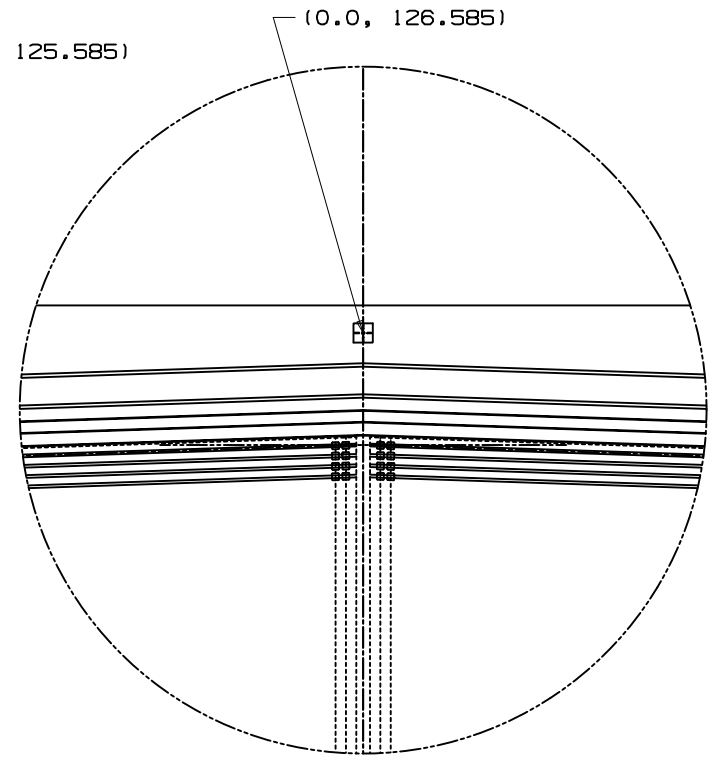

DETAIL P
SCALE 40/1

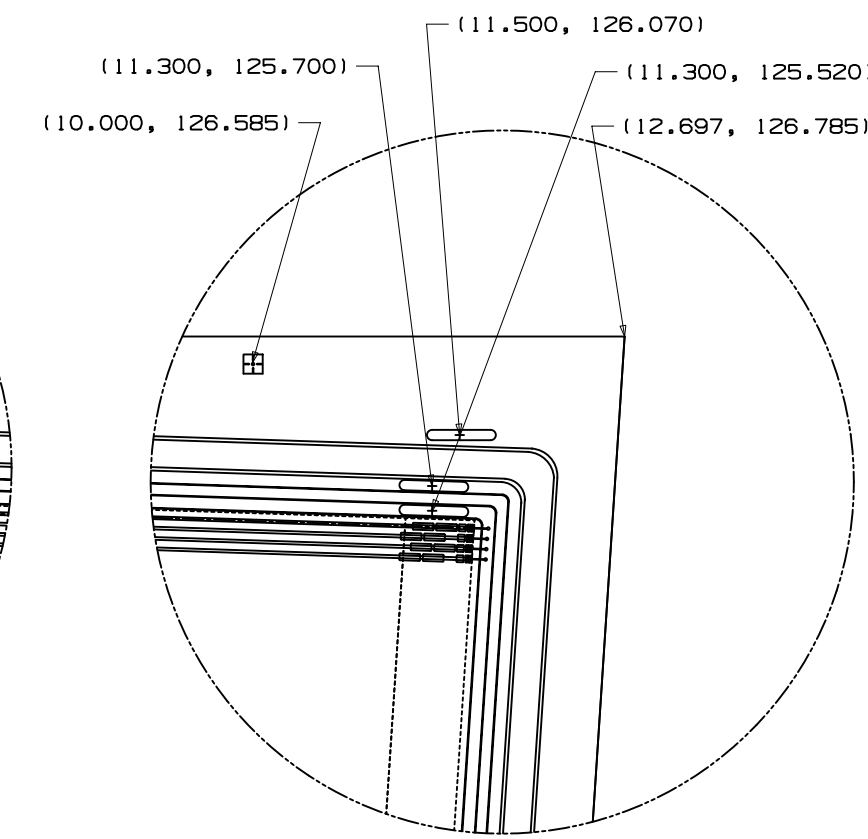

DETAIL R
SCALE 40/1

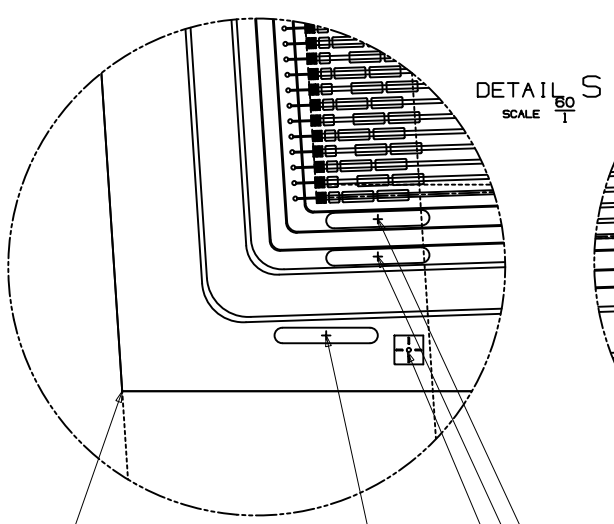

DETAIL S
SCALE 60/1

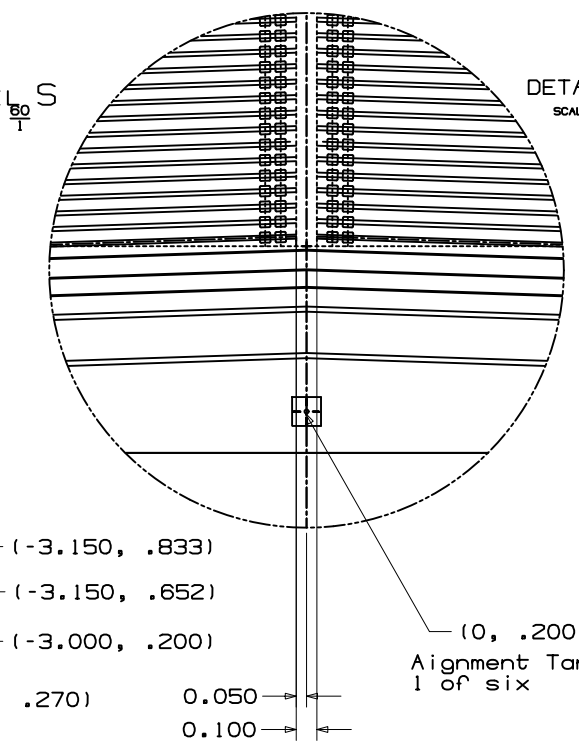

DETAIL T
SCALE 60/1

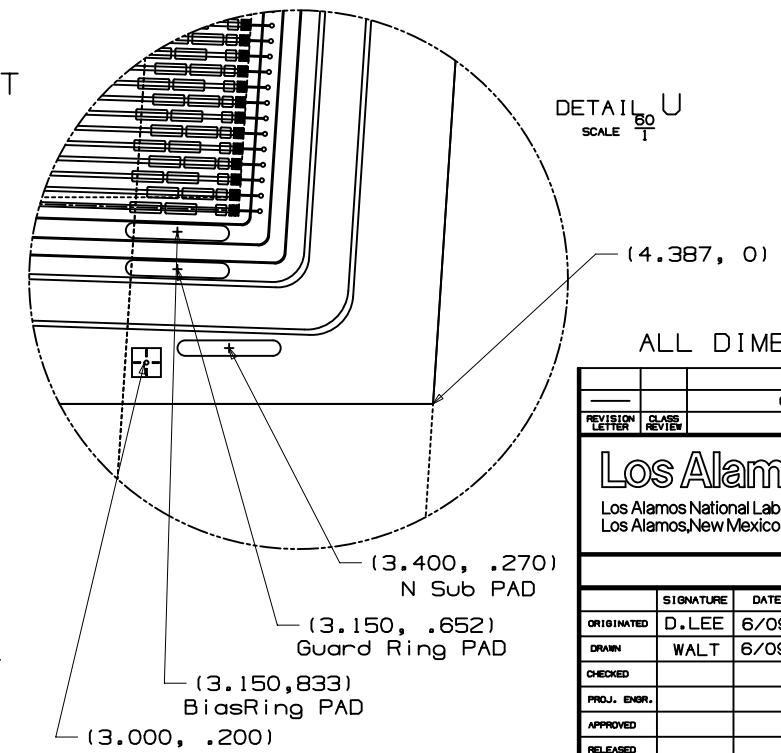

DETAIL U
SCALE 60/1

ALL DIMENSIONS IN MILLIMETERS

REVISION LETTER	CLASS REVIEW	REVISIONS	DATE	CHANGED BY	CHECKED BY	APPROVED BY
—		ORIGINAL ISSUE	—	—	—	—

DRAWING NUMBER	ITEM NUMBER	NUMBER REQD	DESCRIPTION

Los Alamos
Los Alamos National Laboratory
Los Alamos,New Mexico 87545

CLASSIFICATION OF DRAWING: UNC
PART: UNC TITLE BLOCK: UNC

TITLE
FVTX DETECTOR
LARGE SENSOR WEDGE "B"
FOLLOW UP TO HAMAMATSU
PDF AND METROLOGY

	SIGNATURE	DATE	GROUP
ORIGINATED	D.LEE	6/09	P-25
DRAWN	WALT	6/09	P-25
CHECKED			
PROJ. ENGR.			
APPROVED			
RELEASED			

TOLERANCE-(UNLESS OTHERWISE NOTED)
X=±_____ 0.XX =±_____ ANGULAR=±_____
0.X=±_____ 0.XXX=±_____ FINISH =_____

SCALE | TOTAL SHEETS | DRAWING NO. 126Y-267964 | SIZE D | SHEET NO. 1