ALL DIMENSIONS ARE SYMETRIC ABOUT VERTICAL CENTER LINE

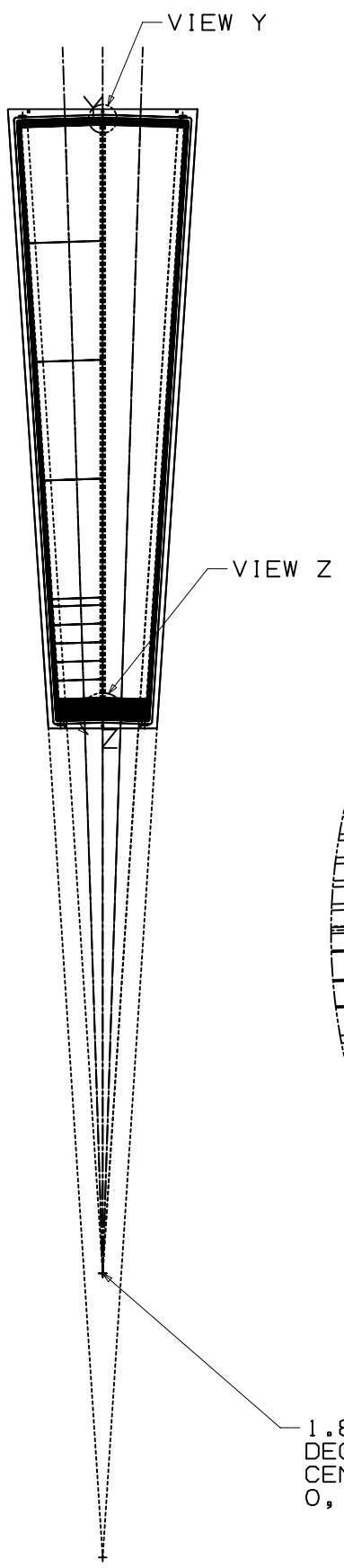

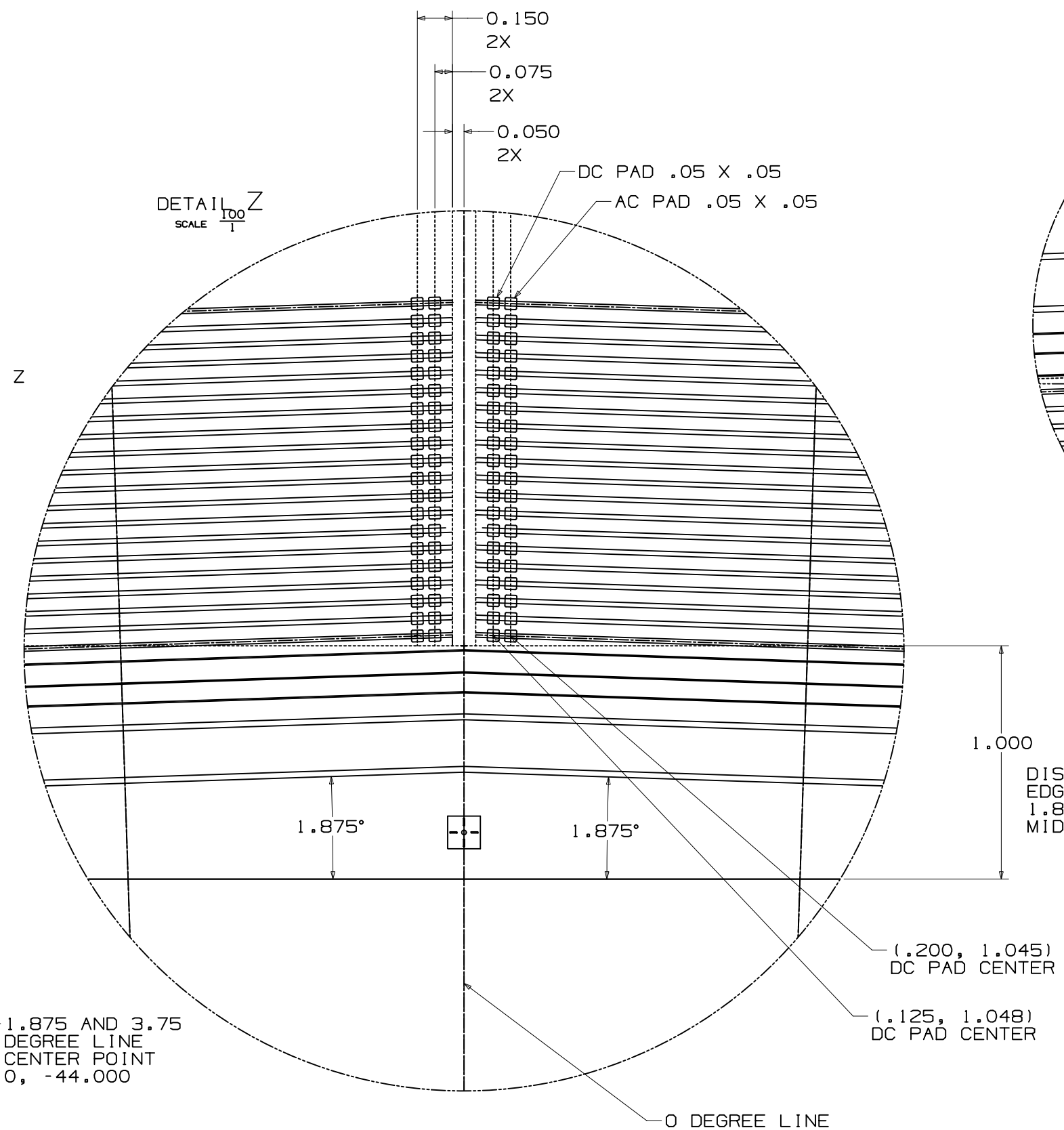

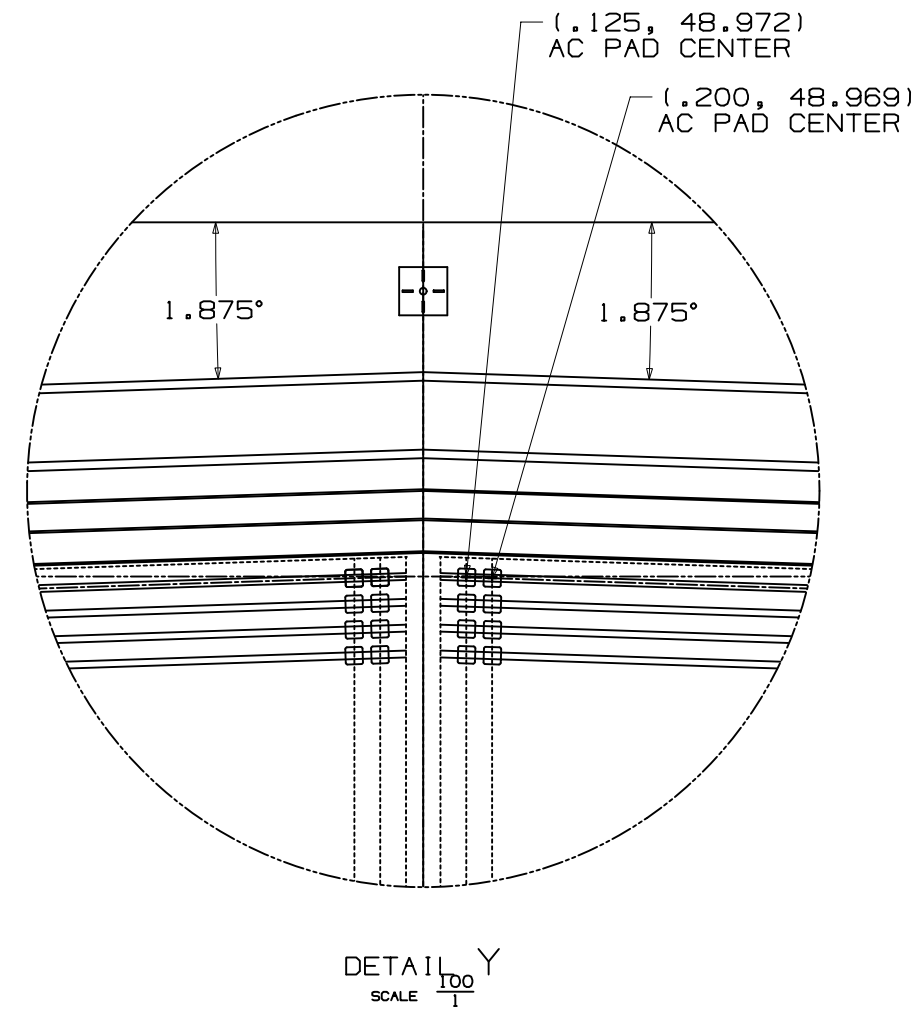

SCALE 4:1

ALL DIMENSIONS IN MILLIMETERS

DRAWING NUMBER	ITEM NUMBER	NUMBER REQD	DESCRIPTION

REVISION LETTER	CLASS REVIEW	REVISIONS	DATE	CHANGED BY	CHECKED BY	APPROVED BY
—		ORIGINAL ISSUE	—	—	—	—

Los Alamos
Los Alamos National Laboratory
Los Alamos,New Mexico 87545

CLASSIFICATION OF DRAWING: UNC
PART: UNC TITLE BLOCK: UNC

TITLE
FVTX DETECTOR
SMALL SENSOR
WEDGE "A"

	SIGNATURE	DATE	GROUP
ORIGINATED	D. LEE	6/09	P-25
DRAWN	WALT	6/09	P-25
CHECKED			
PROJ. ENGR.			
APPROVED			
RELEASED			

TOLERANCE-(UNLESS OTHERWISE NOTED)
X=±_____ O.XX =±_____ ANGULAR=±_____
O.X=±_____ O.XXX=±_____ FINISH =_____

SCALE | TOTAL SHEETS | DRAWING NO. 126Y-267964 | SIZE D | SHEET NO. 6