REVISIONS			
REV	DESCRIPTION	DATE	APPROVED

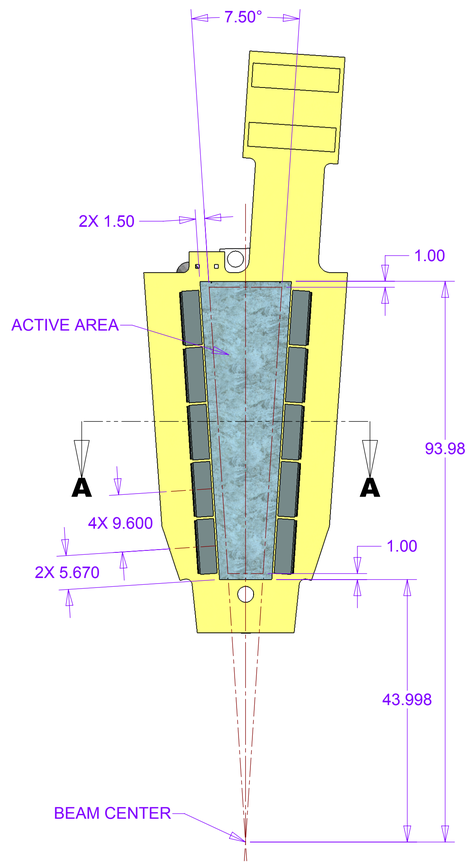

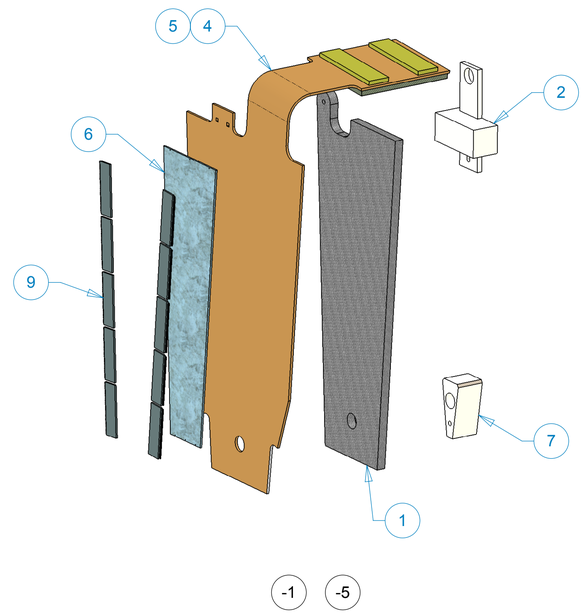

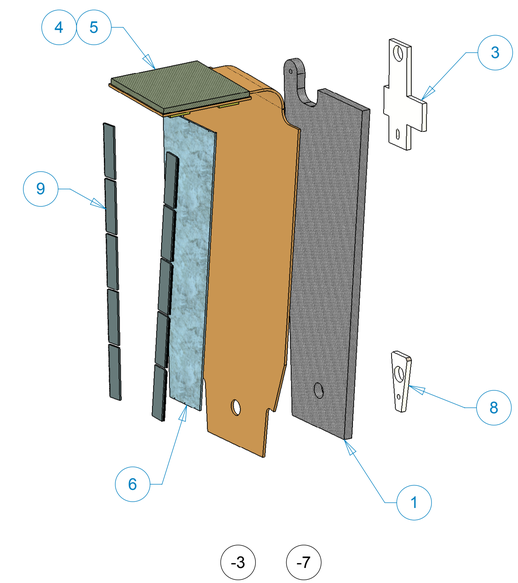

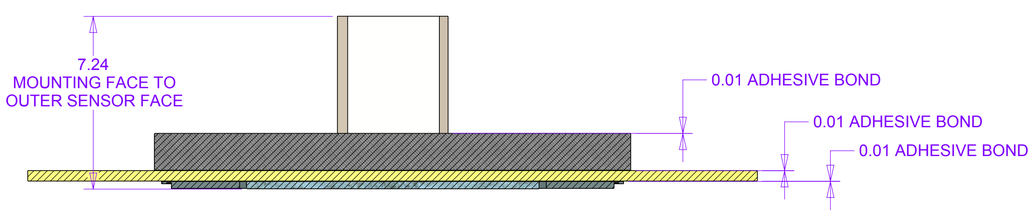

SECTION A-A
SCALE 8 : 1

PARTS LIST

ITEM NO.	-1 Front Side - High/QTY.	-3 Front Side - Low/QTY.	-5 Back Side - High/QTY.	-7 Back Side - Low/QTY.	PART NO.	DESCRIPTION	MATERIAL
1	1	1	1	1	111-PHX-02-3601-1	FVTX Station 1 detector Back Plane	TBD
2	1	-	1	-	111-PHX-02-3602-1	Station 1 Outer Radius Thermal Mount - High	TBD
3	-	1	-	1	111-PHX-02-3602-3	Station 1 Outer Radius Thermal Mount - Low	TBD
4	1	1	-	-	111-PHX-02-3603-1	FVTX Station 1 HDI - Front Side	
5	-	-	1	1	111-PHX-02-3603-3	FVTX Station 1 HDI - Back Side	
6	1	1	1	1	111-PHX-02-3604-1	FVTX Station 1 Sensor	
7	1	-	1	-	111-PHX-02-3703-1	Inner Radius Thermal Mount - High	TBD
8	-	1	-	1	111-PHX-02-3703-3	Inner Radius Thermal Mount - Low	TBD
9	10	10	10	10		FPHX Chip	

PRELIMINARY NOT FOR PRODUCTION

UNLESS OTHERWISE SPECIFIED:
DIMENSIONS ARE IN MILLIMETERS
-TOLERANCES-

DECIMALS
X = +/- .5
.X = +/- .1
.XX = +/- .01
.XXX = +/- .001

ANGULAR = +/- 30'

SURFACE FINISH = 250

FINISH

PART NO.
111-PHX-02-3600-1,3,5,7

CAD GENERATED DRAWING,
DO NOT MANUALLY UPDATE
DO NOT SCALE DRAWING

	SIGNATURE	DATE
Designer	Roger L. Smith	8/12/2008
Drawn	Roger L. Smith	8/12/2008
Checked		
Engineer	RJ Ponchione	8/12/2008
Approved		

THIRD ANGLE PROJECTION

HYTEC, INC

TITLE
PHENIX CENTRAL UPGRADE
FVTX STATION 1
SENSOR MODULE ASSEMBLY

DWG. NO. 111-PHX-02-3600
SIZE D
SHEET NO. 1 of 1
SCALE 2:1
REVISION

THIS DOCUMENT CONTAINS INFORMATION THAT IS THE PROPRIETARY PROPERTY OF HYTEC, INC.
REPRODUCTION, DISCLOSURE, OR RELEASE TO OTHERS, MANUALLY OR ELECTRONICALLY,
IS STRICTLY PROHIBITED WITHOUT THE PRIOR WRITTEN CONSENT OF HYTEC, INC.