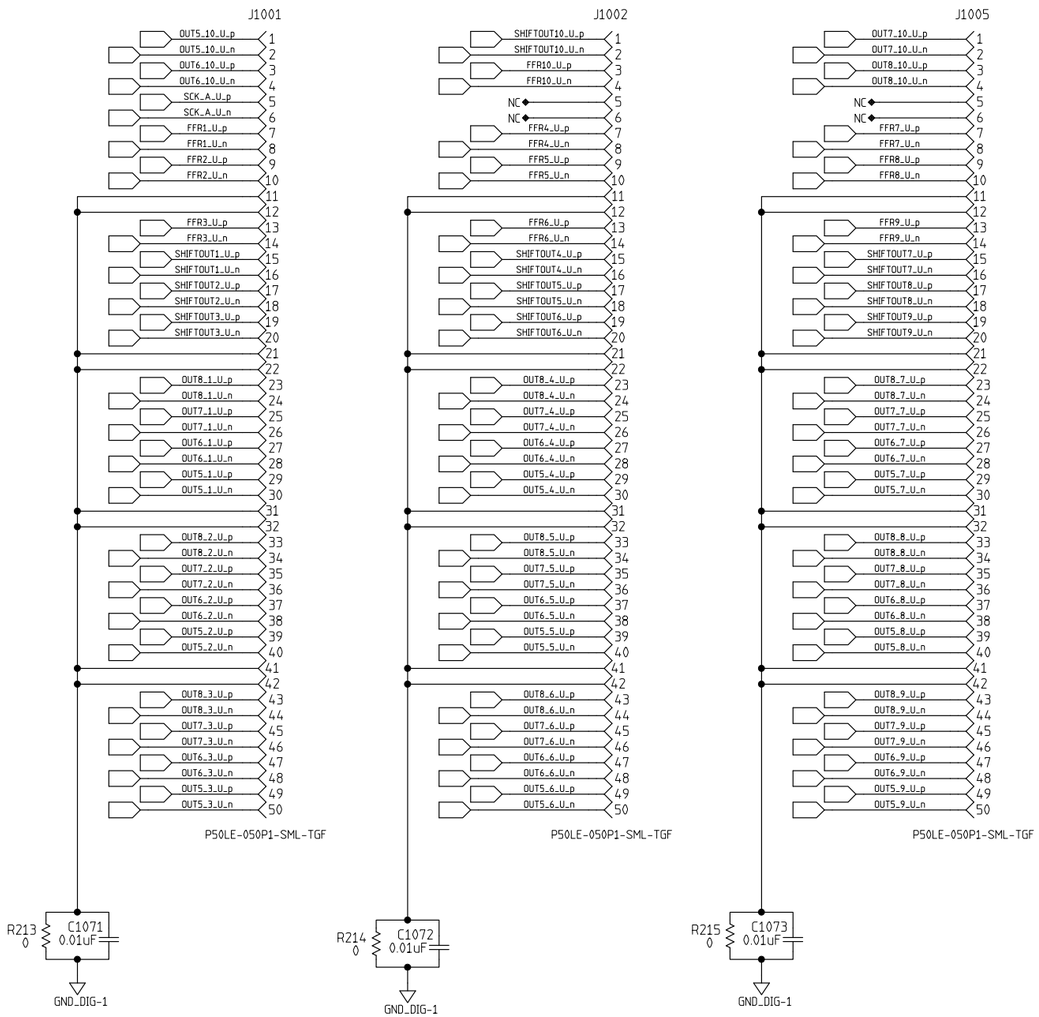

UPSTREAM, LEFT

REVISION LETTER	CLASS REVIEW	REVISIONS	DATE	CHANGE BY	CHECK BY	APPROVED BY
—		ORIGINAL ISSUE	—	—	—	—

LOS ALAMOS

LOS ALAMOS NATIONAL LABORATORY
LOS ALAMOS, NEW MEXICO 87545

MENTOR 2005

	NAME	SIGNATURE	DATE	GROUP
ORIGINATED				
DESIGNED				
DRAWN	S. CHACON	S. CHACON	JUNE 2008	AOT-IC
CHECKED	M. PROKOP	M. PROKOP	JUNE 2008	AOT-RFE
PROJ. ENGR.	M. PROKOP	M. PROKOP	JUNE 2008	AOT-RFE
APPROVED				
RELEASED				

CLASSIFICATION OF DRAWING: U
PART: U DRAWING: U

TITLE
(P-25)
HEAVY QUARK DETECTOR
DATA AQUISITION SYSTEM
SIGNAL CONNECTORS-STATION 1

TOLERANCE (UNLESS OTHERWISE NOTED)
X= ± ——— 0.XX= ± ——— ANGULAR ± ———
0.X= ± ——— 0.XXX= ± ——— FINISH ± ———

SCALE	NO. SHEETS	DRAWING NO.	SIZE	SHEET NO.
N/A	1	126Y-267912	D	1

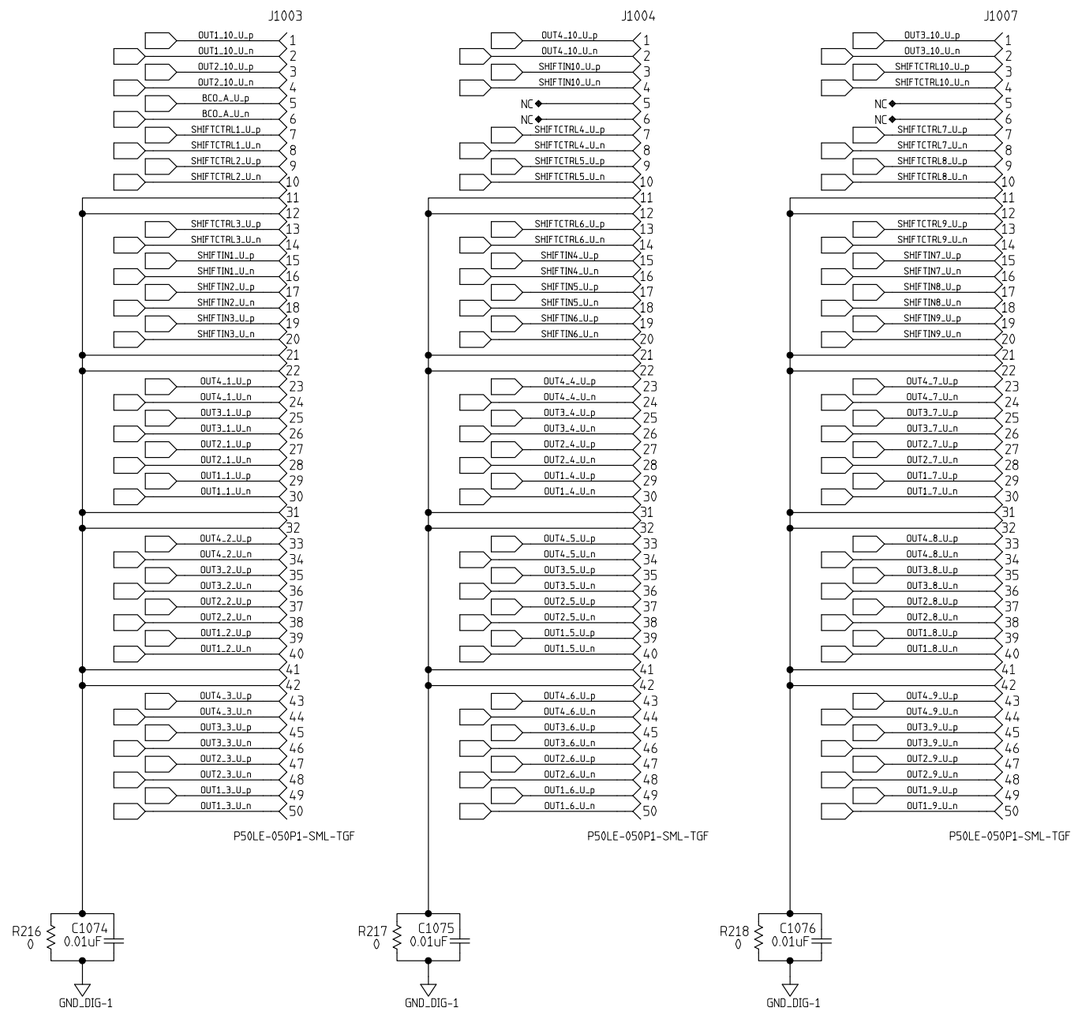

UPSTREAM, RIGHT

REVISION LETTER	CLASS REVISION	REVISIONS	DATE	CHANGE BY	CHECK BY	APPROVED BY
—		ORIGINAL ISSUE	—	—	—	—

LOS ALAMOS
LOS ALAMOS NATIONAL LABORATORY
LOS ALAMOS, NEW MEXICO 87545

MENTOR 2005

	NAME	SIGNATURE	DATE	GROUP
ORIGINATED				
DESIGNED				
DRAWN	S. CHACON	S. CHACON	JUNE 2008	AOT-IC
CHECKED	M. PROKOP	M. PROKOP	JUNE 2008	AOT-RFE
PROJ. ENGR.	M. PROKOP	M. PROKOP	JUNE 2008	AOT-RFE
APPROVED				
RELEASED				

CLASSIFICATION OF: DRAWING: U
PART: U DRAWING: U

TITLE
(P-25)
HEAVY QUARK DETECTOR
DATA AQUISITION SYSTEM
SIGNAL CONNECTORS-STATION 2

TOLERANCE (UNLESS OTHERWISE NOTED)
X= ± — 0.XX= ± — ANGULAR ± —
0.X= ± — 0.XXX= ± — FINISH ± —

SCALE	NO. SHEETS	DRAWING NO.	SIZE	SHEET NO.
N/A	1	126Y-267912	D	2

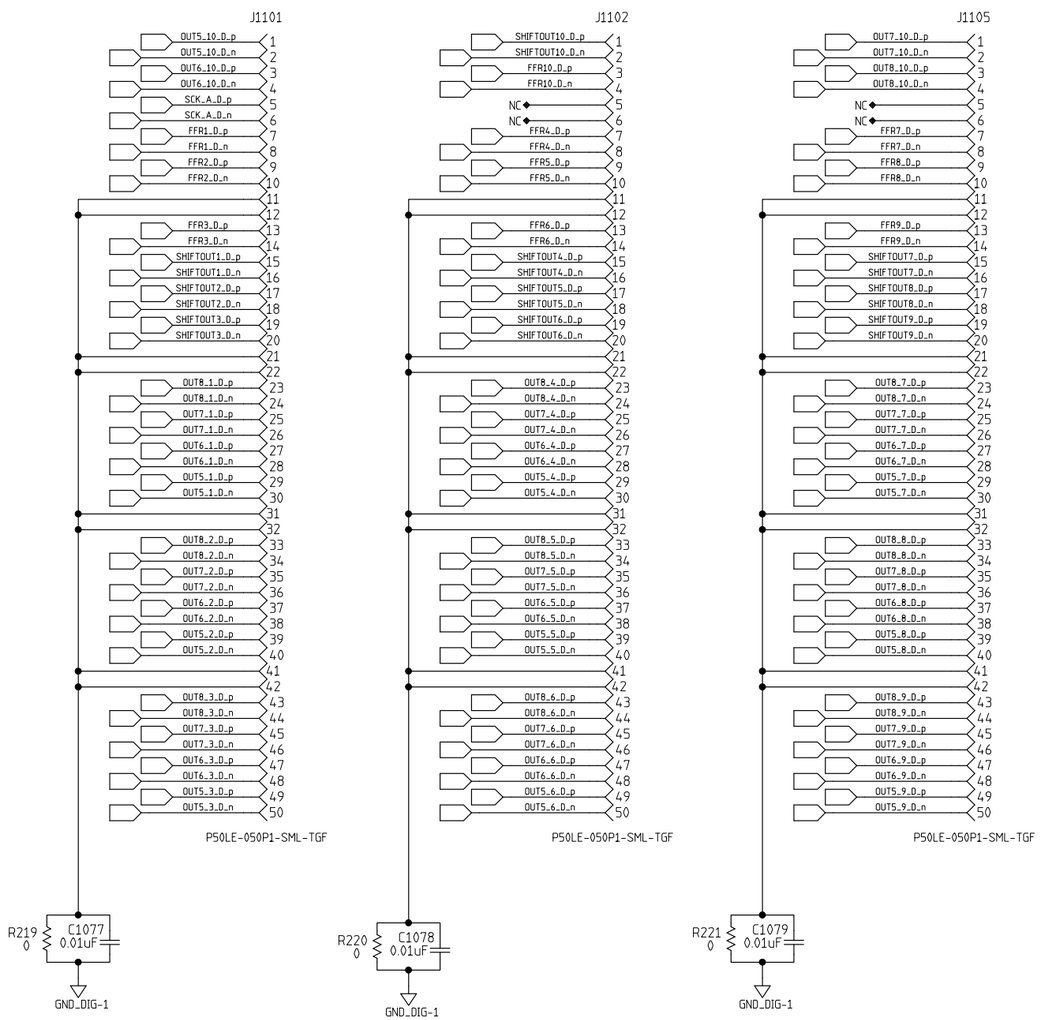

DOWNSTREAM, LEFT

REVISION LETTER	CLASS REVIEW	REVISIONS	DATE	CHANGE BY	CHECK BY	APPROVED BY
—		ORIGINAL ISSUE	—	—	—	—

LOS ALAMOS

LOS ALAMOS NATIONAL LABORATORY
LOS ALAMOS, NEW MEXICO 87545

MENTOR 2005

	NAME	SIGNATURE	DATE	GROUP
ORIGINATED				
DESIGNED				
DRAWN	S. CHACON	S. CHACON	JUNE 2008	AOT-IC
CHECKED	M. PROKOP	M. PROKOP	JUNE 2008	AOT-RFE
PROJ. ENGR.	M. PROKOP	M. PROKOP	JUNE 2008	AOT-RFE
APPROVED				
RELEASED				

CLASSIFICATION OF DRAWING: U
PART: U DRAWING: U

TITLE

(P-25)

HEAVY QUARK DETECTOR
DATA AQUISITION SYSTEM
SIGNAL CONNECTORS-STATION 3

TOLERANCE (UNLESS OTHERWISE NOTED)
X= ± — 0.XX= ± — ANGULAR ± —
0.X= ± — 0.XXX= ± — FINISH ± —

SCALE	NO. SHEETS	DRAWING NO.	SIZE	SHEET NO.
N/A	1	126Y-267912	D	3

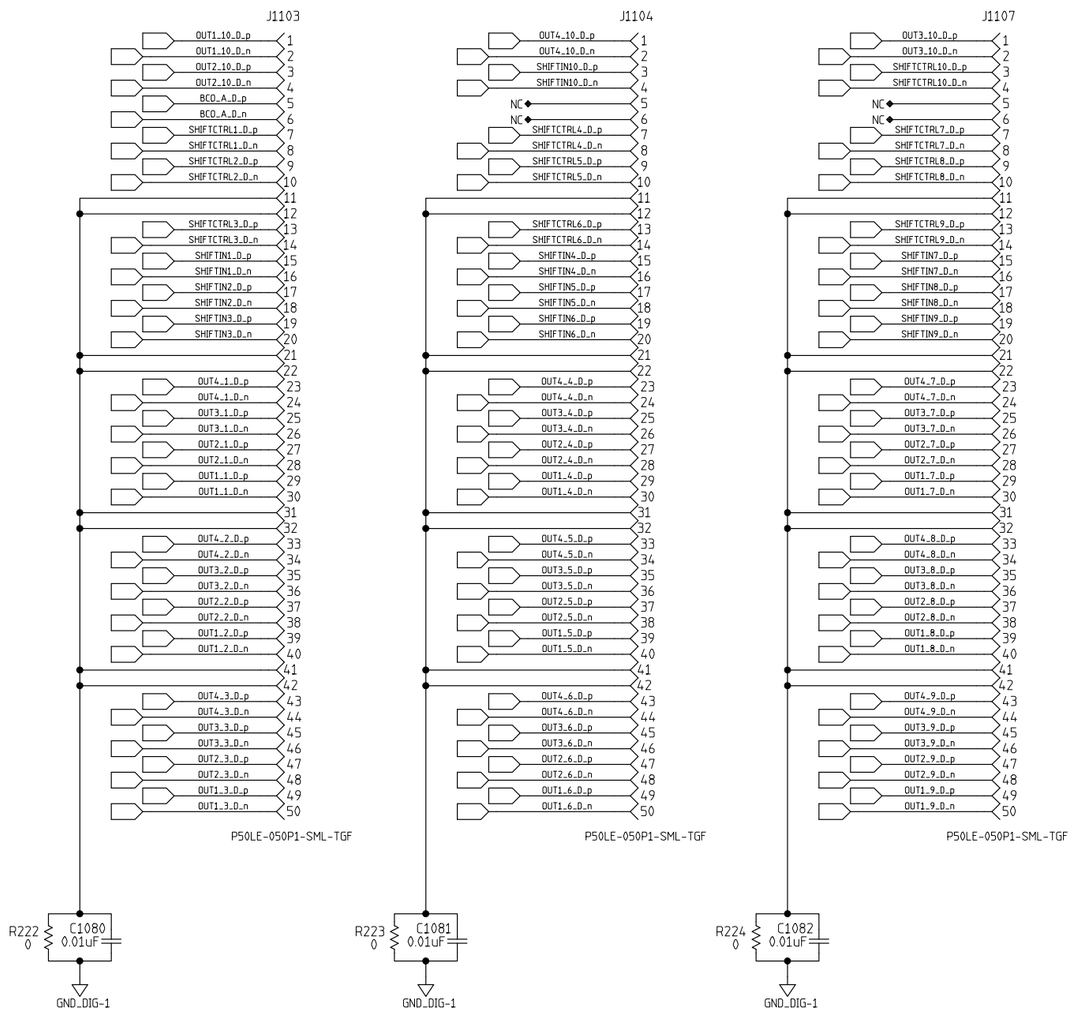

DOWNSTREAM, RIGHT

REVISION LETTER	CLASS REVIEW	REVISIONS	DATE	CHANGE BY	CHECK BY	APPROVED BY
—		ORIGINAL ISSUE	—	—	—	—

LOS ALAMOS

LOS ALAMOS NATIONAL LABORATORY
LOS ALAMOS, NEW MEXICO 87545

MENTOR 2005

	NAME	SIGNATURE	DATE	GROUP
ORIGINATED				
DESIGNED				
DRAWN	S. CHACON	S. CHACON	JUNE 2008	AOT-IC
CHECKED	M. PROKOP	M. PROKOP	JUNE 2008	AOT-RFE
PROJ. ENGR.	M. PROKOP	M. PROKOP	JUNE 2008	AOT-RFE
APPROVED				
RELEASED				

CLASSIFICATION OF: DRAWING: U
PART: U DRAWING: U

TITLE
(P-25)
HEAVY QUARK DETECTOR
DATA AQUISITION SYSTEM
SIGNAL CONNECTORS-STATION 4

TOLERANCE (UNLESS OTHERWISE NOTED)
X= ± ——— 0.XX= ± ——— ANGULAR ± ———
0.X= ± ——— 0.XXX= ± ——— FINISH ± ———

SCALE	NO. SHEETS	DRAWING NO.	SIZE	SHEET NO.
N/A	1	126Y-267912	D	4

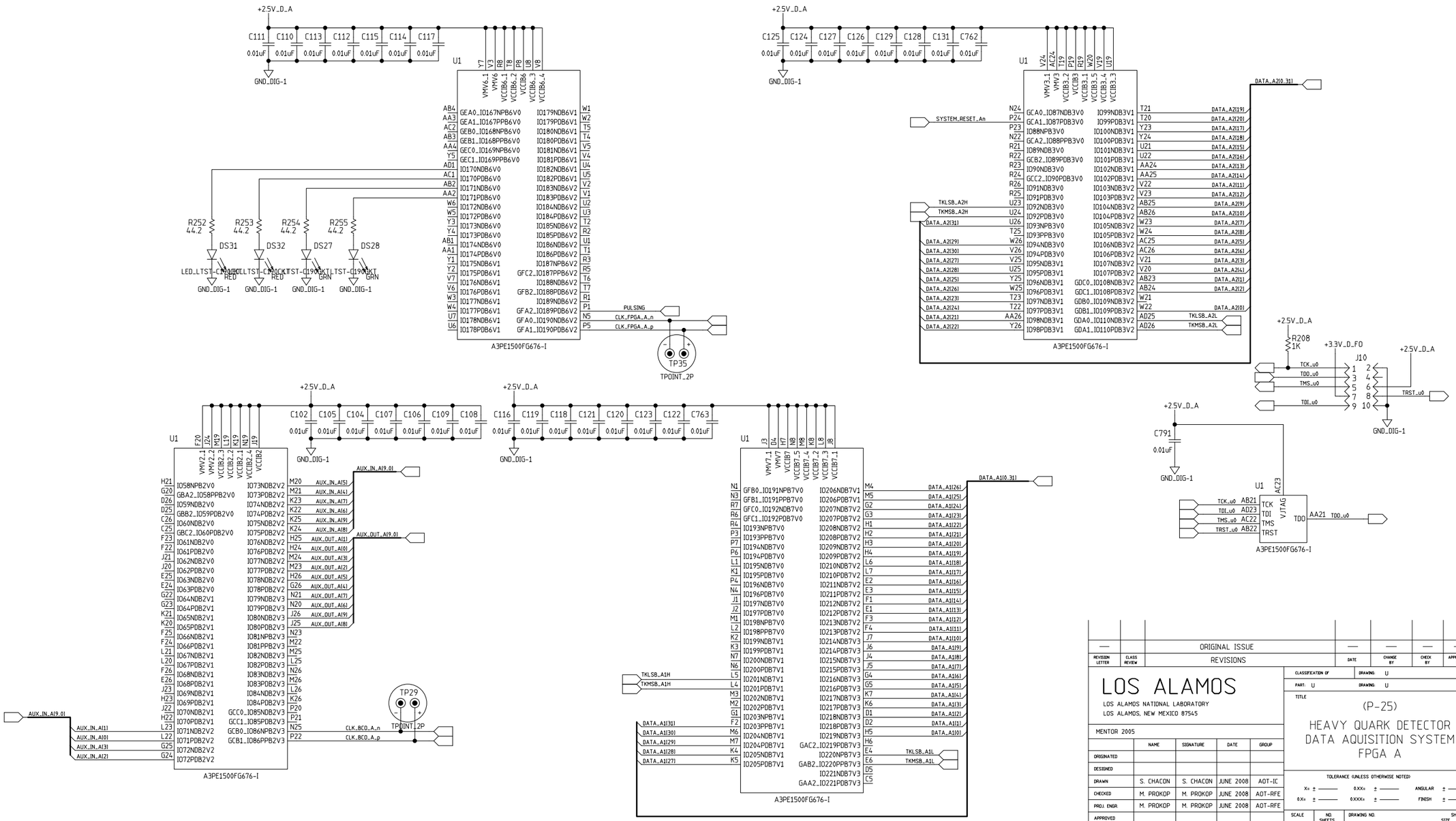

REVISION LETTER	CLASS REVIEW	REVISIONS	DATE	CHANGE BY	CHECK BY	APPROVED BY
—		ORIGINAL ISSUE	—	—	—	—

LOS ALAMOS

LOS ALAMOS NATIONAL LABORATORY
LOS ALAMOS, NEW MEXICO 87545

MENTOR 2005

	NAME	SIGNATURE	DATE	GROUP
ORIGINATED				
DESIGNED				
DRAWN	S. CHACON	S. CHACON	JUNE 2008	AOT-IC
CHECKED	M. PROKOP	M. PROKOP	JUNE 2008	AOT-RFE
PROJ. ENGR	M. PROKOP	M. PROKOP	JUNE 2008	AOT-RFE
APPROVED				
RELEASED				

CLASSIFICATION OF: DRAWING U
PART: U DRAWING U

TITLE

(P-25)
HEAVY QUARK DETECTOR
DATA AQUISITION SYSTEM
FPGA A

TOLERANCE (UNLESS OTHERWISE NOTED)
X± ____ 0.XX± ____ ANGULAR ± ____
0.X± ____ 0.XXX± ____ FINISH ± ____

SCALE	NO. SHEETS	DRAWING NO.	SIZE	SHEET NO.
N/A	1	126Y-267912	D	5

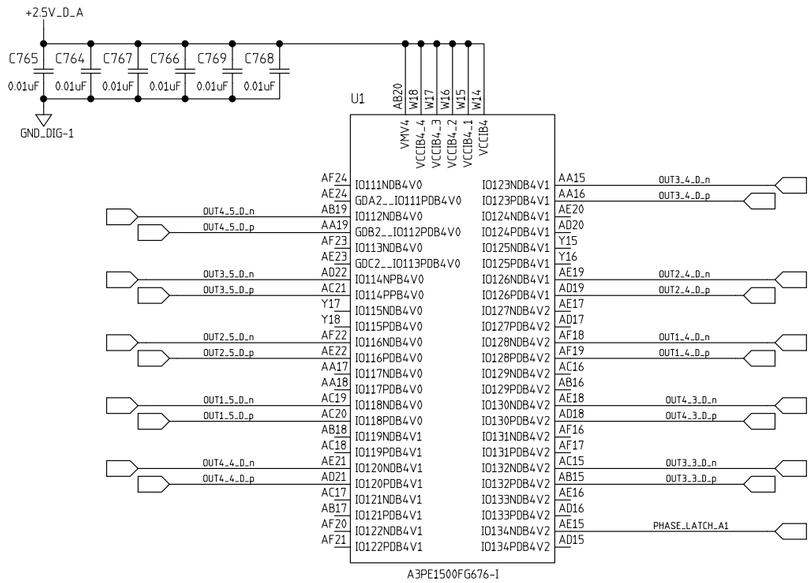

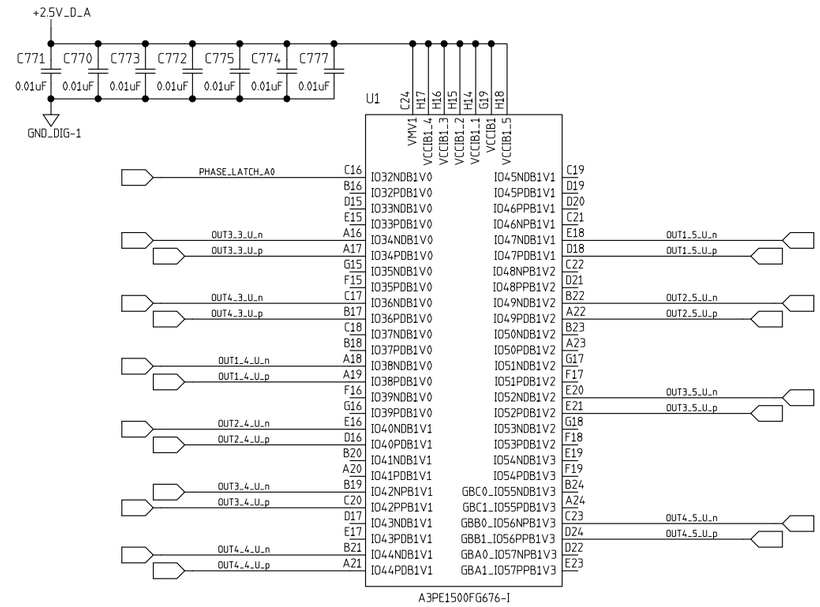

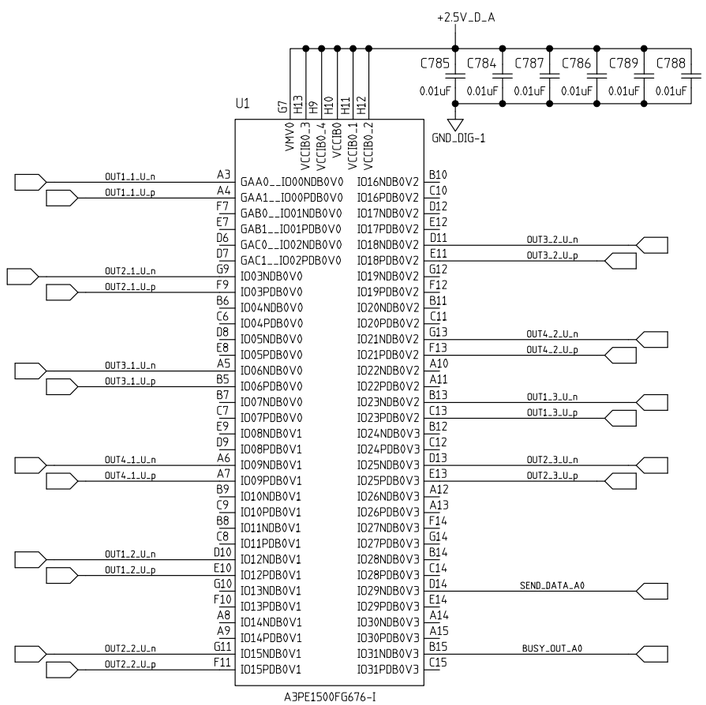

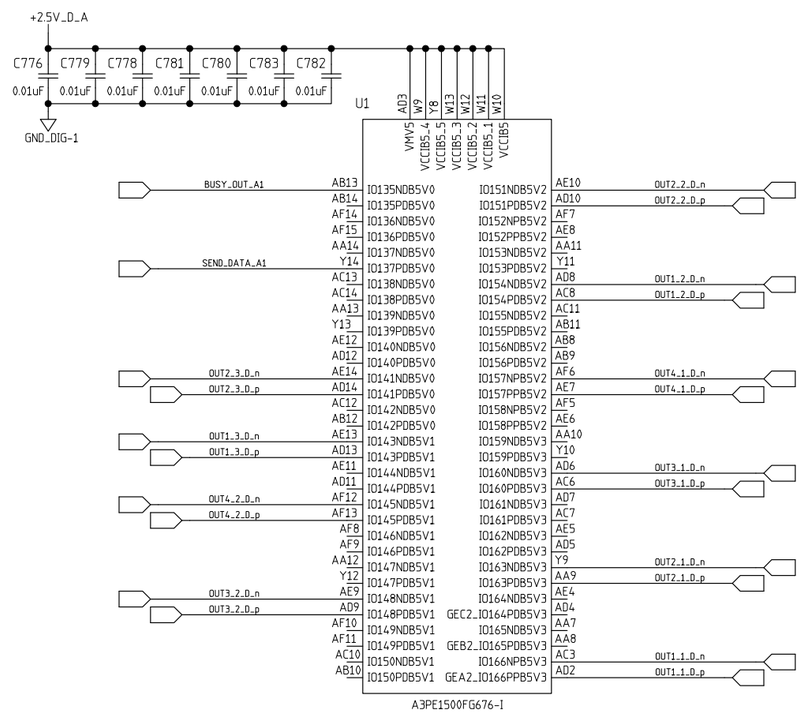

REVISION LETTER	CLASS REVIEW	REVISIONS	DATE	CHANGE BY	CHECK BY	APPROVED BY
—		ORIGINAL ISSUE	—	—	—	—

LOS ALAMOS

LOS ALAMOS NATIONAL LABORATORY
LOS ALAMOS, NEW MEXICO 87545

MENTOR 2005

	NAME	SIGNATURE	DATE	GROUP
ORIGINATED				
DESIGNED				
DRAWN	S. CHACON	S. CHACON	JUNE 2008	AOT-IC
CHECKED	M. PROKOP	M. PROKOP	JUNE 2008	AOT-RFE
PROJ. ENGR.	M. PROKOP	M. PROKOP	JUNE 2008	AOT-RFE
APPROVED				
RELEASED				

CLASSIFICATION OF: DRAWING: U
PART: U DRAWING: U

TITLE

(P-25)

HEAVY QUARK DETECTOR
DATA AQUISITION SYSTEM
FPGA A

TOLERANCE (UNLESS OTHERWISE NOTED)
X± ± 0.XX± ± ANGULAR ±
0.X± ± 0.XXX± ± FINISH ±

SCALE	NO. SHEETS	DRAWING NO.	SIZE	SHEET NO.
N/A	1	126Y-267912	D	6

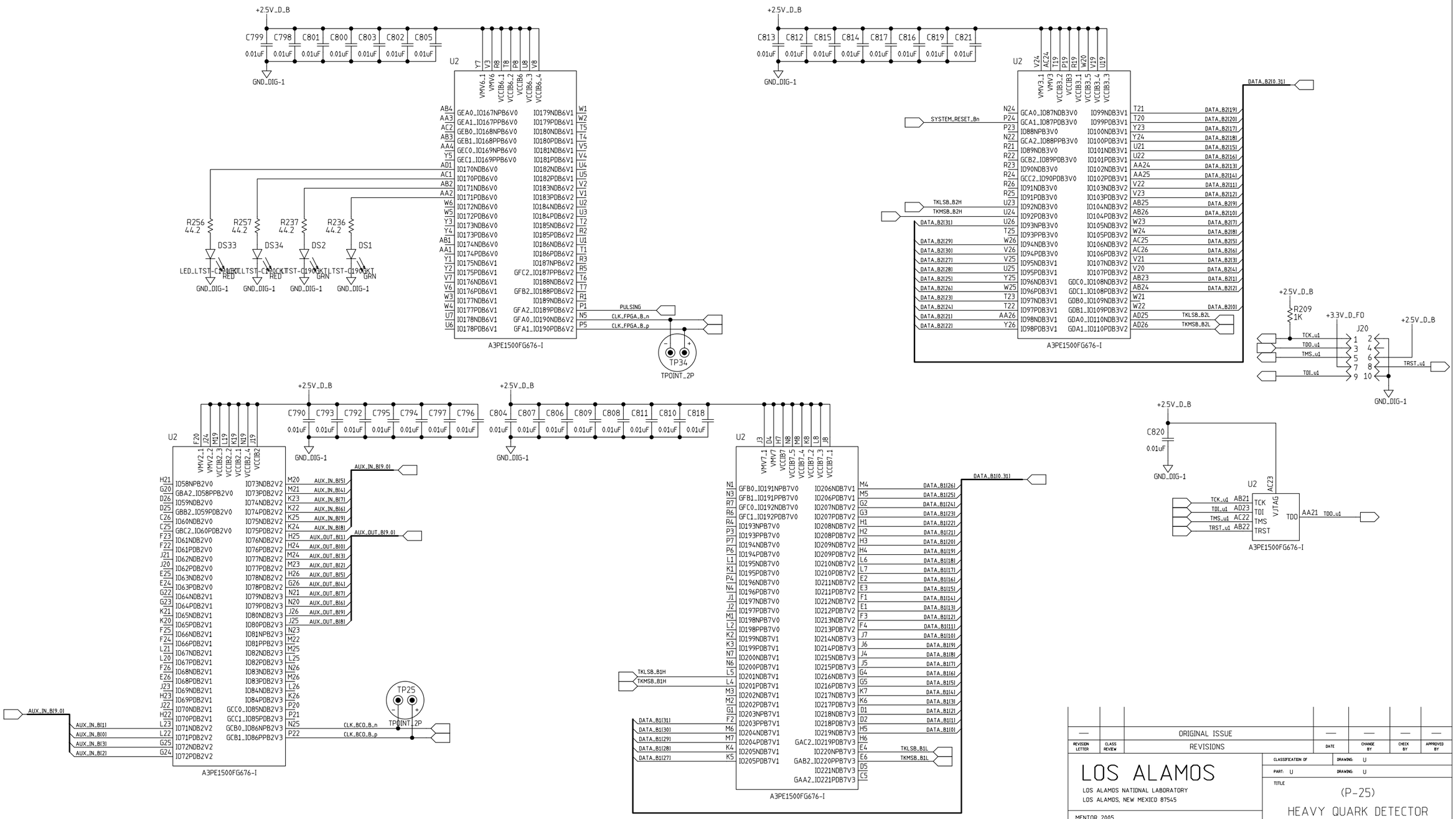

REVISION LETTER	CLASS REVIEW	REVISIONS	DATE	CHANGE BY	CHECK BY	APPROVED BY
—		ORIGINAL ISSUE	—	—	—	—

LOS ALAMOS

LOS ALAMOS NATIONAL LABORATORY
LOS ALAMOS, NEW MEXICO 87545

MENTOR 2005

	NAME	SIGNATURE	DATE	GROUP
ORIGINATED				
DESIGNED				
DRAWN	S. CHACON	S. CHACON	JUNE 2008	AOT-IC
CHECKED	M. PROKOP	M. PROKOP	JUNE 2008	AOT-RFE
PROJ. ENGR.	M. PROKOP	M. PROKOP	JUNE 2008	AOT-RFE
APPROVED				
RELEASED				

CLASSIFICATION OF: U — DRAWING: U
PART: U — DRAWING: U

TITLE

(P-25)

HEAVY QUARK DETECTOR
DATA AQUISITION SYSTEM
FPGA B

TOLERANCE (UNLESS OTHERWISE NOTED)
X= ± ——— 0.XX= ± ——— ANGULAR ± ———
0.X= ± ——— 0.XXX= ± ——— FINISH ± ———

SCALE	NO. SHEETS	DRAWING NO.	SIZE	SHEET NO.
N/A	1	126Y-267912	D	7

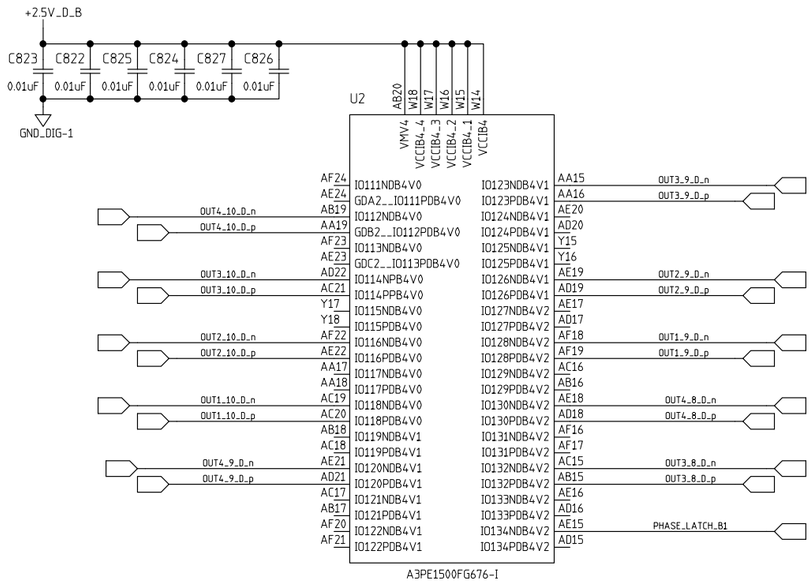

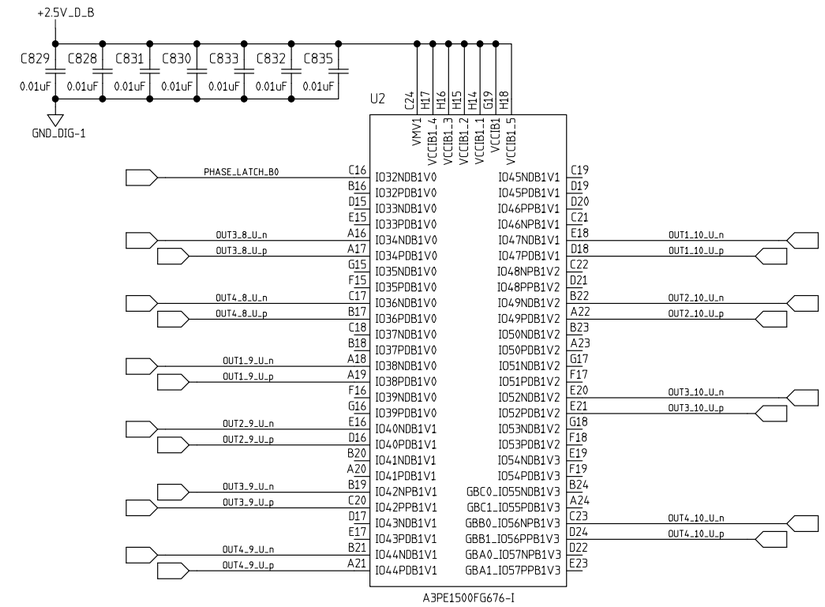

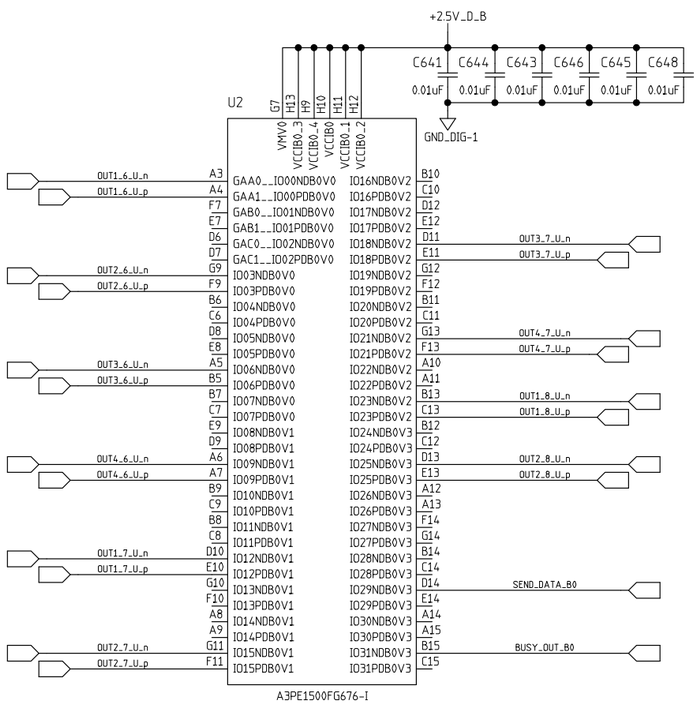

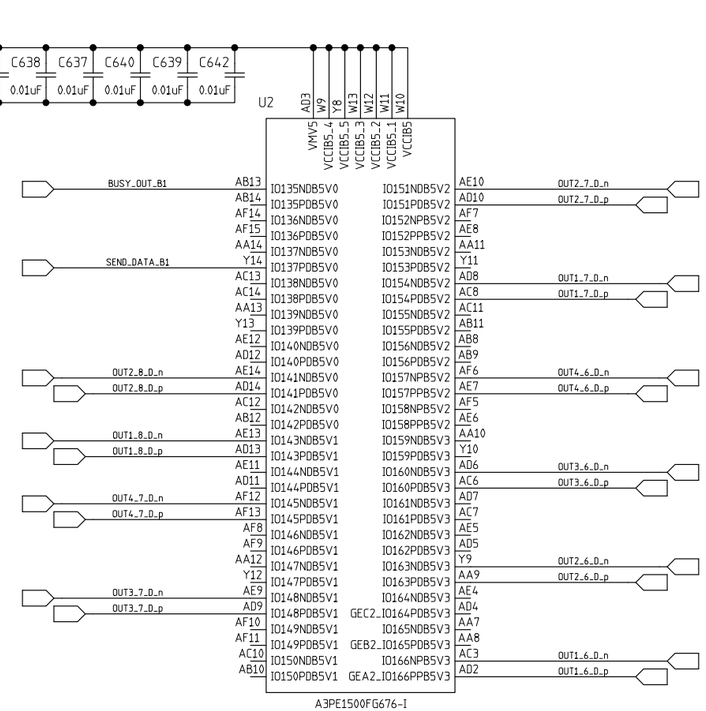

REVISION LETTER	CLASS REVIEW	REVISIONS	DATE	CHANGE BY	CHECK BY	APPROVED BY
—		ORIGINAL ISSUE	—	—	—	—

LOS ALAMOS

LOS ALAMOS NATIONAL LABORATORY
LOS ALAMOS, NEW MEXICO 87545

MENTOR 2005

	NAME	SIGNATURE	DATE	GROUP
ORIGINATED				
DESIGNED				
DRAWN	S. CHACON	S. CHACON	JUNE 2008	AOT-IC
CHECKED	M. PROKOP	M. PROKOP	JUNE 2008	AOT-RFE
PROJ. ENGR.	M. PROKOP	M. PROKOP	JUNE 2008	AOT-RFE
APPROVED				
RELEASED				

CLASSIFICATION OF DRAWING: U
PART: U DRAWING: U

TITLE

(P-25)

HEAVY QUARK DETECTOR
DATA AQUISITION SYSTEM
FPGA B

TOLERANCE (UNLESS OTHERWISE NOTED)
X= ± ——— 0.XX= ± ——— ANGULAR ± ———
0.X= ± ——— 0.XXX= ± ——— FINISH ± ———

SCALE	NO. SHEETS	DRAWING NO.	SIZE	SHEET NO.
N/A	1	126Y-267912	D	8

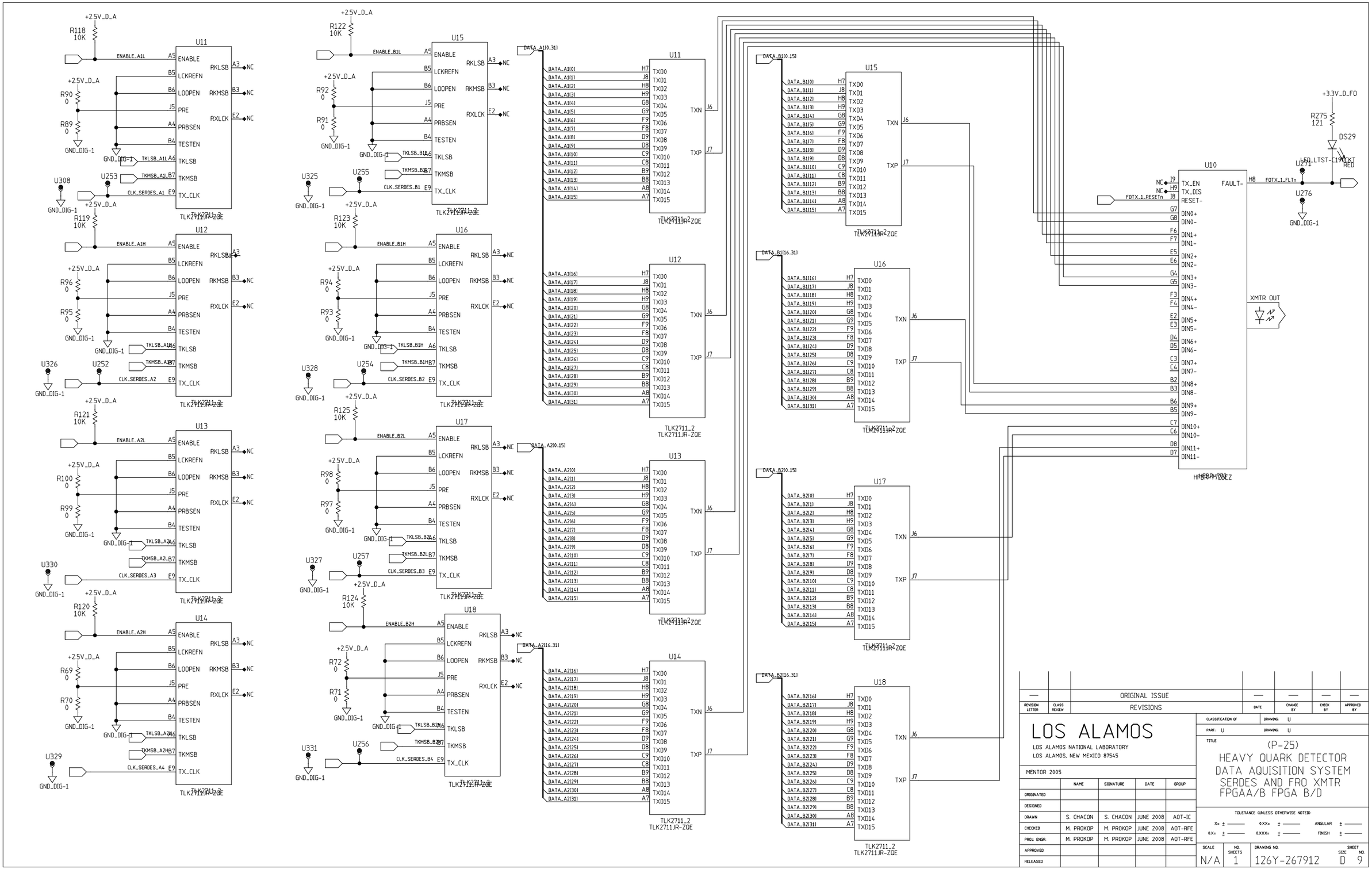

REVISION LETTER	CLASS REVIEW	REVISIONS	DATE	CHANGE BY	CHECK BY	APPROVED BY
—		ORIGINAL ISSUE	—	—	—	—

LOS ALAMOS

LOS ALAMOS NATIONAL LABORATORY
LOS ALAMOS, NEW MEXICO 87545

MENTOR 2005

	NAME	SIGNATURE	DATE	GROUP
ORIGINATED				
DESIGNED				
DRAWN	S. CHACON	S. CHACON	JUNE 2008	AOT-IC
CHECKED	M. PROKOP	M. PROKOP	JUNE 2008	AOT-RFE
PROJ. ENGR.	M. PROKOP	M. PROKOP	JUNE 2008	AOT-RFE
APPROVED				
RELEASED				

CLASSIFICATION OF PART: U DRAWING: U
DRAWING: U

TITLE
(P-25)
HEAVY QUARK DETECTOR
DATA AQUISITION SYSTEM
SERDES AND FRO XMTR
FPGAA/B FPGA B/D

TOLERANCE (UNLESS OTHERWISE NOTED)
X= ± ——— 0.XX= ± ——— ANGULAR ± ———
0.X= ± ——— 0.XXX= ± ——— FINISH ± ———

SCALE	NO. SHEETS	DRAWING NO.	SIZE	SHEET NO.
N/A	1	126Y-267912	D	9

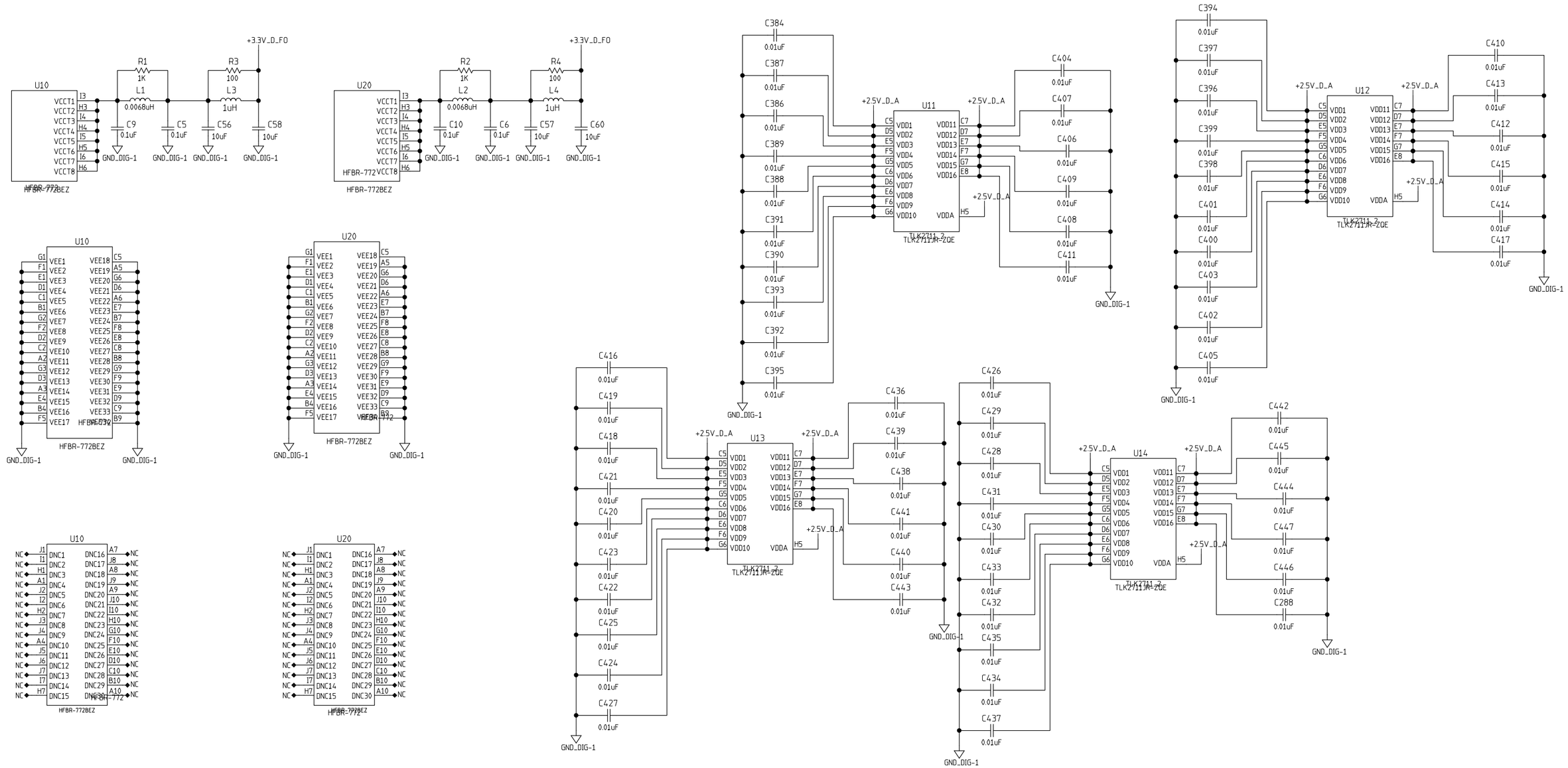

REVISION LETTER	CLASS REVISION	REVISIONS	DATE	CHANGE BY	CHECK BY	APPROVED BY
—		ORIGINAL ISSUE	—	—	—	—

LOS ALAMOS

LOS ALAMOS NATIONAL LABORATORY
LOS ALAMOS, NEW MEXICO 87545

MENTOR 2005

	NAME	SIGNATURE	DATE	GROUP
ORIGINATED				
DESIGNED				
DRAWN	S. CHACON	S. CHACON	JUNE 2008	AOT-IC
CHECKED	M. PROKOP	M. PROKOP	JUNE 2008	AOT-RFE
PROJ. ENGR.	M. PROKOP	M. PROKOP	JUNE 2008	AOT-RFE
APPROVED				
RELEASED				

CLASSIFICATION OF — DRAWING: U
PART: U — DRAWING: U

TITLE (P-25)

HEAVY QUARK DETECTOR
DATA AQUISITION SYSTEM

SERDES AND FO TX PWR
FPGA A/B FPGA B/D

TOLERANCE (UNLESS OTHERWISE NOTED)
X= ± — 0.XX= ± — ANGULAR ± —
0.X= ± — 0.XXX= ± — FINISH ± —

SCALE	NO. SHEETS	DRAWING NO.	SIZE	SHEET NO.
N/A	1	126Y-267912	D	10

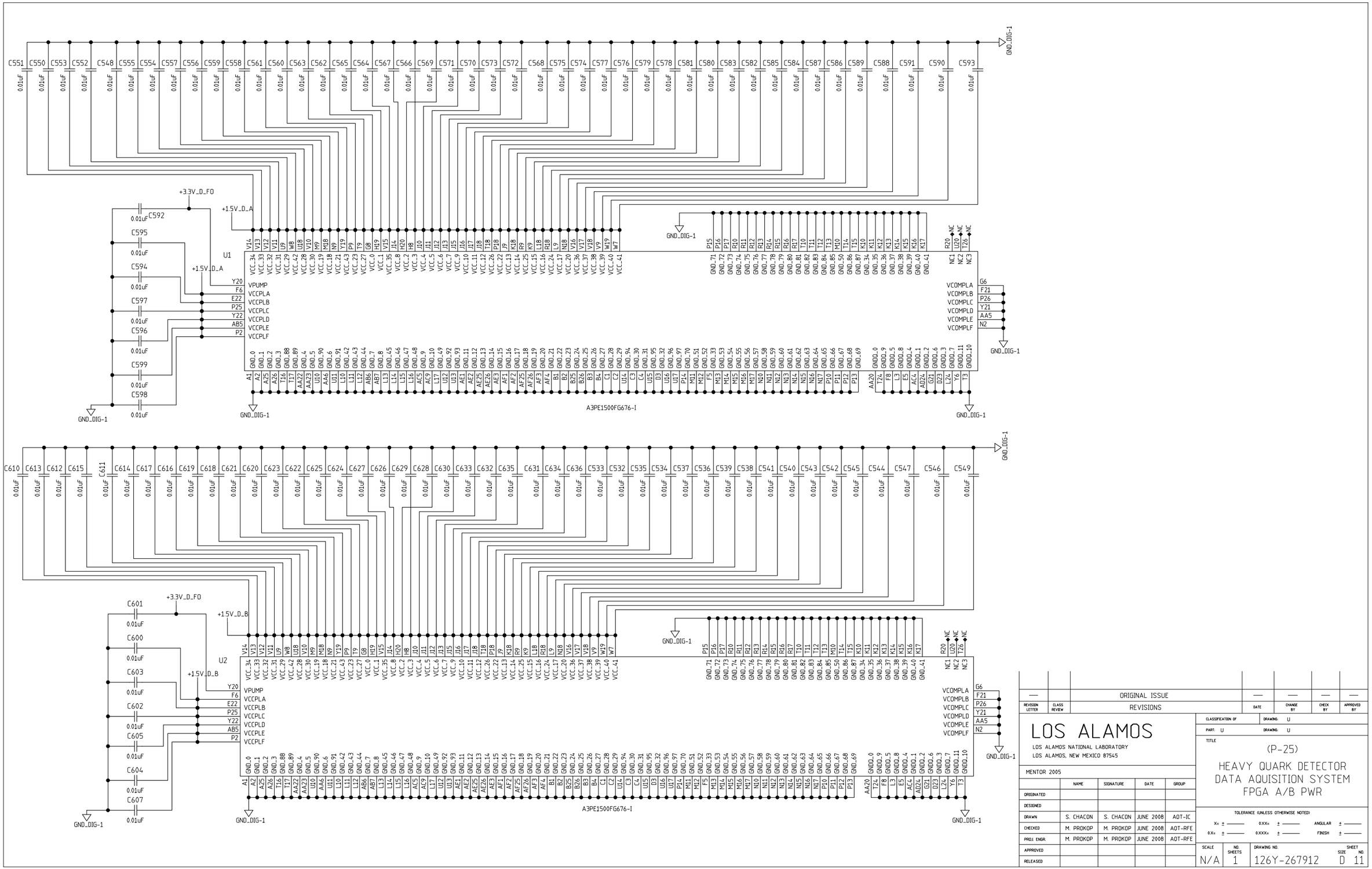

REVISION LETTER	CLASS REVIEW	REVISIONS	DATE	CHANGE BY	CHECK BY	APPROVED BY
—		ORIGINAL ISSUE	—	—	—	—

LOS ALAMOS

LOS ALAMOS NATIONAL LABORATORY
LOS ALAMOS, NEW MEXICO 87545

MENTOR 2005

	NAME	SIGNATURE	DATE	GROUP
ORIGINATED				
DESIGNED				
DRAWN	S. CHACON	S. CHACON	JUNE 2008	AOT-IC
CHECKED	M. PROKOP	M. PROKOP	JUNE 2008	AOT-RFE
PROJ. ENGR.	M. PROKOP	M. PROKOP	JUNE 2008	AOT-RFE
APPROVED				
RELEASED				

CLASSIFICATION OF: DRAWING: U
PART: U DRAWING: U

TITLE

(P-25)
HEAVY QUARK DETECTOR
DATA AQUISITION SYSTEM
FPGA A/B PWR

TOLERANCE (UNLESS OTHERWISE NOTED)
X= ± ——— 0.XX= ± ——— ANGULAR ± ———
0.X= ± ——— 0.XXX= ± ——— FINISH ± ———

SCALE	NO. SHEETS	DRAWING NO.	SIZE	SHEET NO.
N/A	1	126Y-267912	D	11

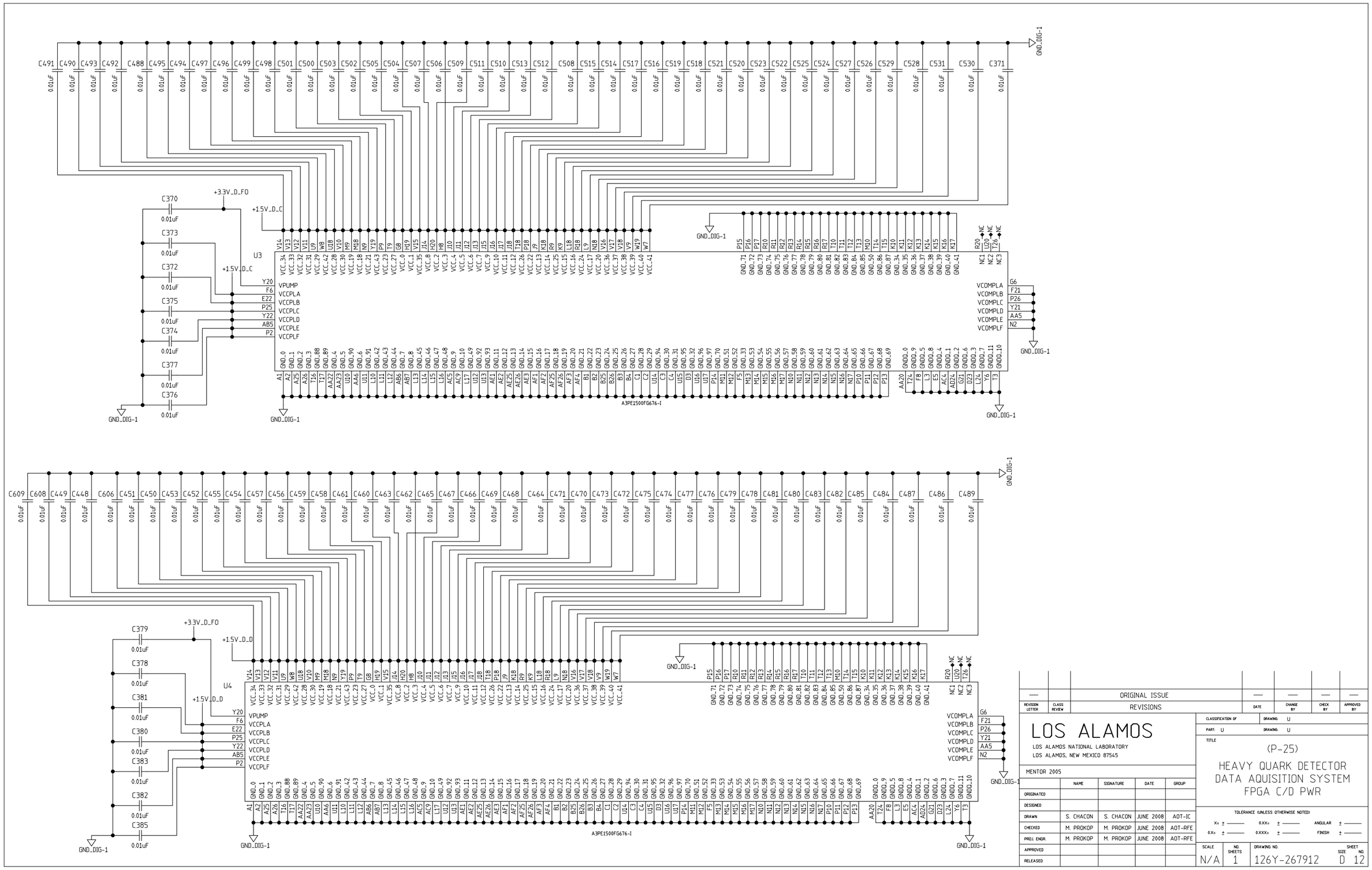

—		ORIGINAL ISSUE	—	—	—	—
REVISION LETTER	CLASS REVIEW	REVISIONS	DATE	CHANGE BY	CHECK BY	APPROVED BY

LOS ALAMOS

LOS ALAMOS NATIONAL LABORATORY
LOS ALAMOS, NEW MEXICO 87545

MENTOR 2005

CLASSIFICATION OF: DRAWING: U
PART: U DRAWING: U

TITLE

(P-25)
HEAVY QUARK DETECTOR
DATA AQUISITION SYSTEM
FPGA C/D PWR

	NAME	SIGNATURE	DATE	GROUP
ORIGINATED				
DESIGNED				
DRAWN	S. CHACON	S. CHACON	JUNE 2008	AOT-IC
CHECKED	M. PROKOP	M. PROKOP	JUNE 2008	AOT-RFE
PROJ. ENGR.	M. PROKOP	M. PROKOP	JUNE 2008	AOT-RFE
APPROVED				
RELEASED				

TOLERANCE (UNLESS OTHERWISE NOTED)
X= ± ——— 0.XX= ± ——— ANGULAR ± ———
0.X= ± ——— 0.XXX= ± ——— FINISH ± ———

SCALE	NO. SHEETS	DRAWING NO.	SIZE	SHEET NO.
N/A	1	126Y-267912	D	12

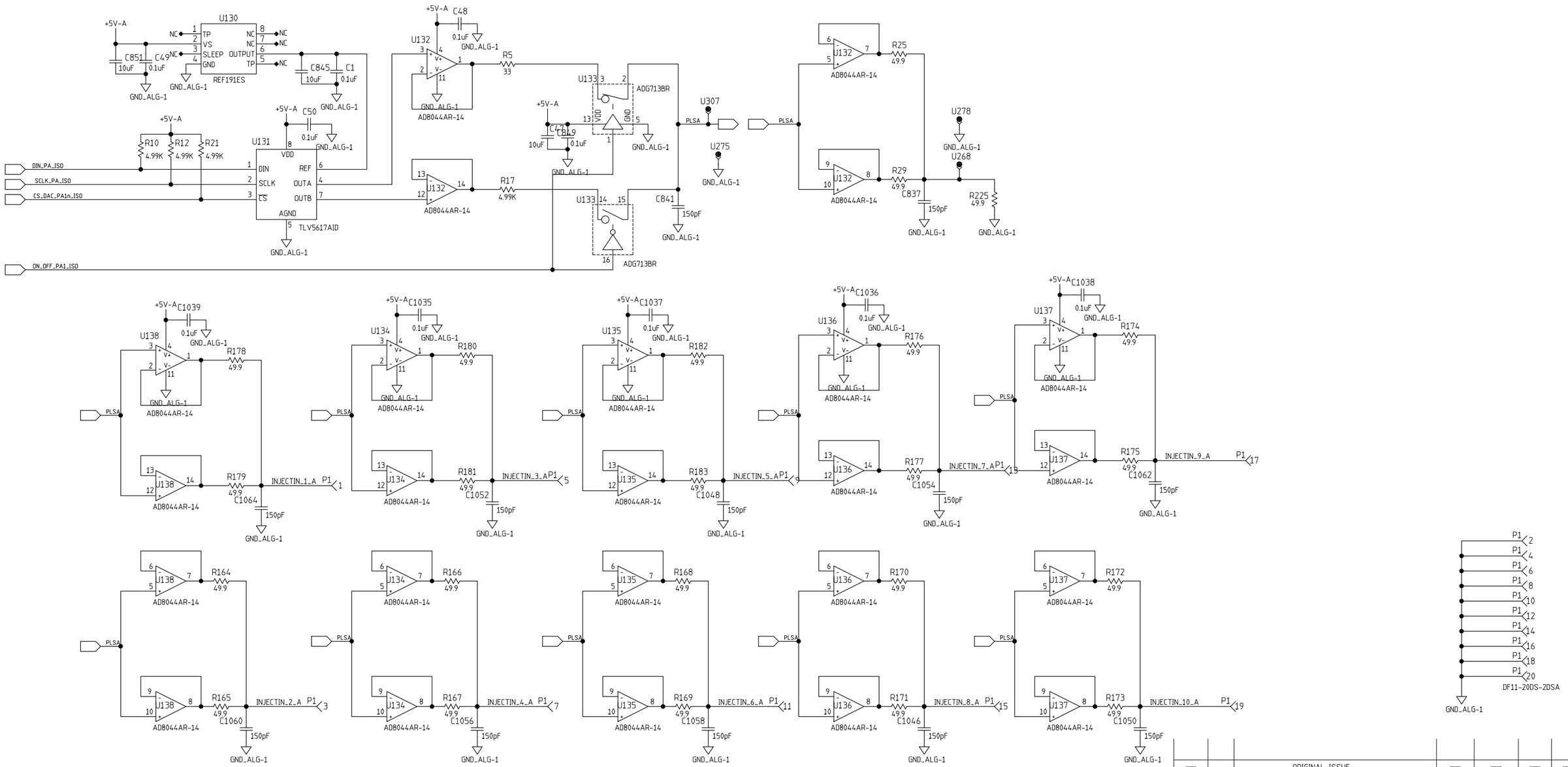

REVISION LETTER	CLASS REVIEW	REVISIONS	DATE	CHANGE BY	CHECK BY	APPROVED BY
—		ORIGINAL ISSUE	—	—	—	—

LOS ALAMOS

LOS ALAMOS NATIONAL LABORATORY
LOS ALAMOS, NEW MEXICO 87545

MENTOR 2005

	NAME	SIGNATURE	DATE	GROUP
ORIGINATED				
DESIGNED				
DRAWN	S. CHACON	S. CHACON	JUNE 2008	AOT-IC
CHECKED	M. PROKOP	M. PROKOP	JUNE 2008	AOT-RFE
PROJ. ENGR.	M. PROKOP	M. PROKOP	JUNE 2008	AOT-RFE
APPROVED				
RELEASED				

CLASSIFICATION OF DRAWING: U
PART: U DRAWING: U

TITLE

(P-25)

HEAVY QUARK DETECTOR
DATA AQUISITION SYSTEM
CALIB. PULSER A

TOLERANCE (UNLESS OTHERWISE NOTED)
X= ± ——— 0.XX= ± ——— ANGULAR ± ———
0.X= ± ——— 0.XXX= ± ——— FINISH ± ———

SCALE	NO. SHEETS	DRAWING NO.	SIZE	SHEET NO.
N/A	?	126Y-267912	D	13

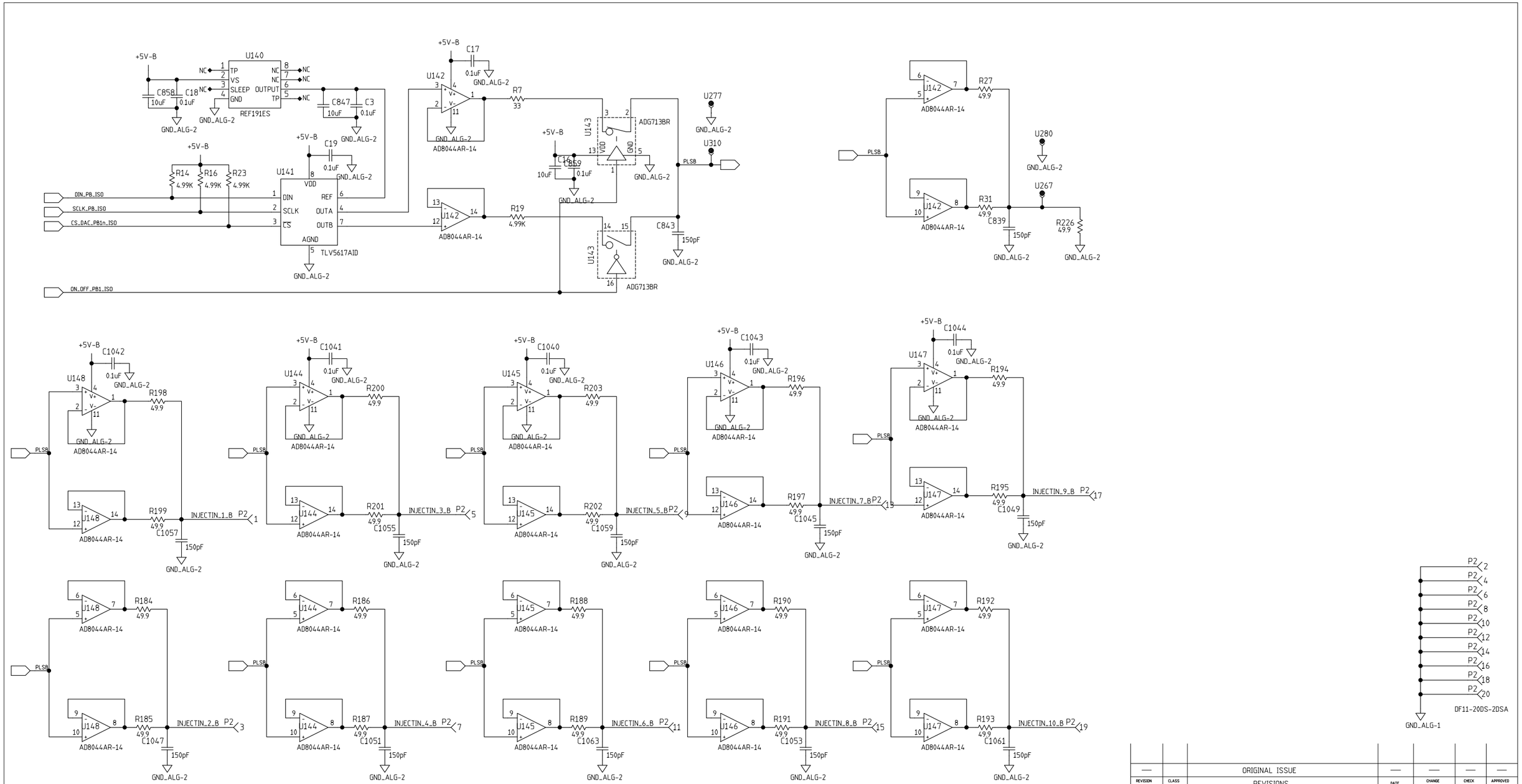

REVISION LETTER	CLASS REVIEW	REVISIONS	DATE	CHANGE BY	CHECK BY	APPROVED BY
—		ORIGINAL ISSUE	—	—	—	—

LOS ALAMOS

LOS ALAMOS NATIONAL LABORATORY
LOS ALAMOS, NEW MEXICO 87545

MENTOR 2005

	NAME	SIGNATURE	DATE	GROUP
ORIGINATED				
DESIGNED				
DRAWN	S. CHACON	S. CHACON	JUNE 2008	AOT-IC
CHECKED	M. PROKOP	M. PROKOP	JUNE 2008	AOT-RFE
PROJ. ENGR.	M. PROKOP	M. PROKOP	JUNE 2008	AOT-RFE
APPROVED				
RELEASED				

CLASSIFICATION OF DRAWING: U
PART: U DRAWING: U

TITLE

(P-25)

HEAVY QUARK DETECTOR
DATA AQUISITION SYSTEM
CALIB. PULSER B

TOLERANCE (UNLESS OTHERWISE NOTED)
X= ± — 0.XX= ± — ANGULAR ± —
0.X= ± — 0.XXX= ± — FINISH ± —

SCALE	NO. SHEETS	DRAWING NO.	SHEET SIZE	SHEET NO.
N/A	?	126Y-267912	D	14

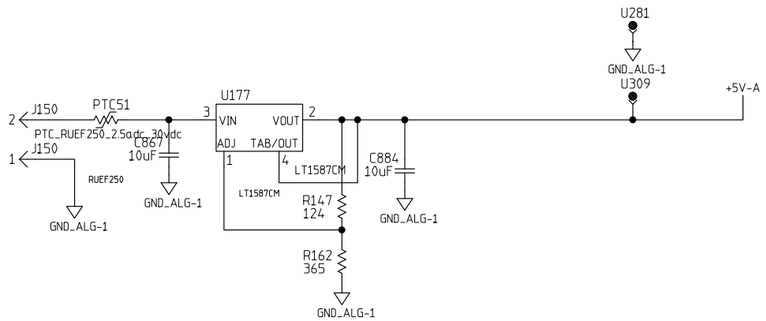

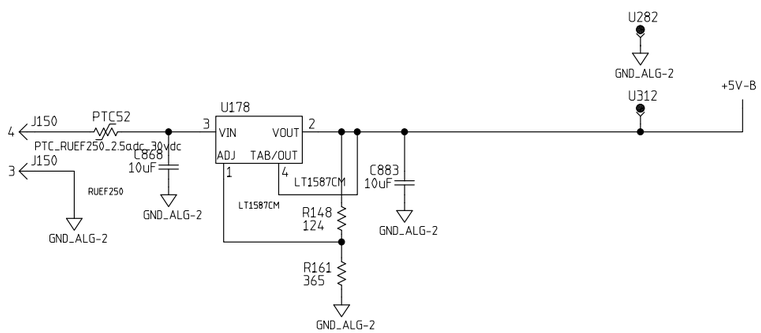

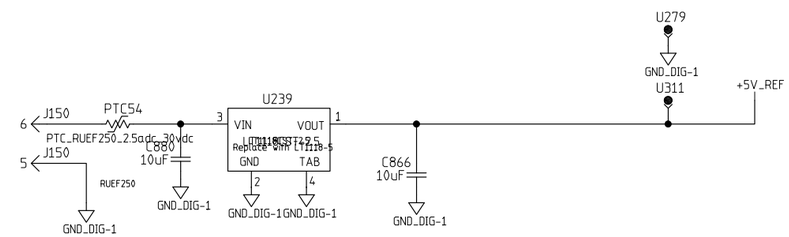

REVISION LETTER	CLASS REVIEW	REVISIONS	DATE	CHANGE BY	CHECK BY	APPROVED BY
—		ORIGINAL ISSUE	—	—	—	—

LOS ALAMOS

LOS ALAMOS NATIONAL LABORATORY
LOS ALAMOS, NEW MEXICO 87545

MENTOR 2005

	NAME	SIGNATURE	DATE	GROUP
ORIGINATED				
DESIGNED				
DRAWN	S. CHACON	S. CHACON	JUNE 2008	AOT-IC
CHECKED	M. PROKOP	M. PROKOP	JUNE 2008	AOT-RFE
PROJ. ENGR.	M. PROKOP	M. PROKOP	JUNE 2008	AOT-RFE
APPROVED				
RELEASED				

CLASSIFICATION OF: DRAWING: U
PART: U DRAWING: U

TITLE
(P-25)
HEAVY QUARK DETECTOR
DATA AQUISITION SYSTEM
+5V POWER

TOLERANCE (UNLESS OTHERWISE NOTED)
X= ± ——— 0.XX= ± ——— ANGULAR ± ———
0.X= ± ——— 0.XXX= ± ——— FINISH ± ———

SCALE N/A | NO. SHEETS ? | DRAWING NO. 126Y-267912 | SIZE D | SHEET NO. 15

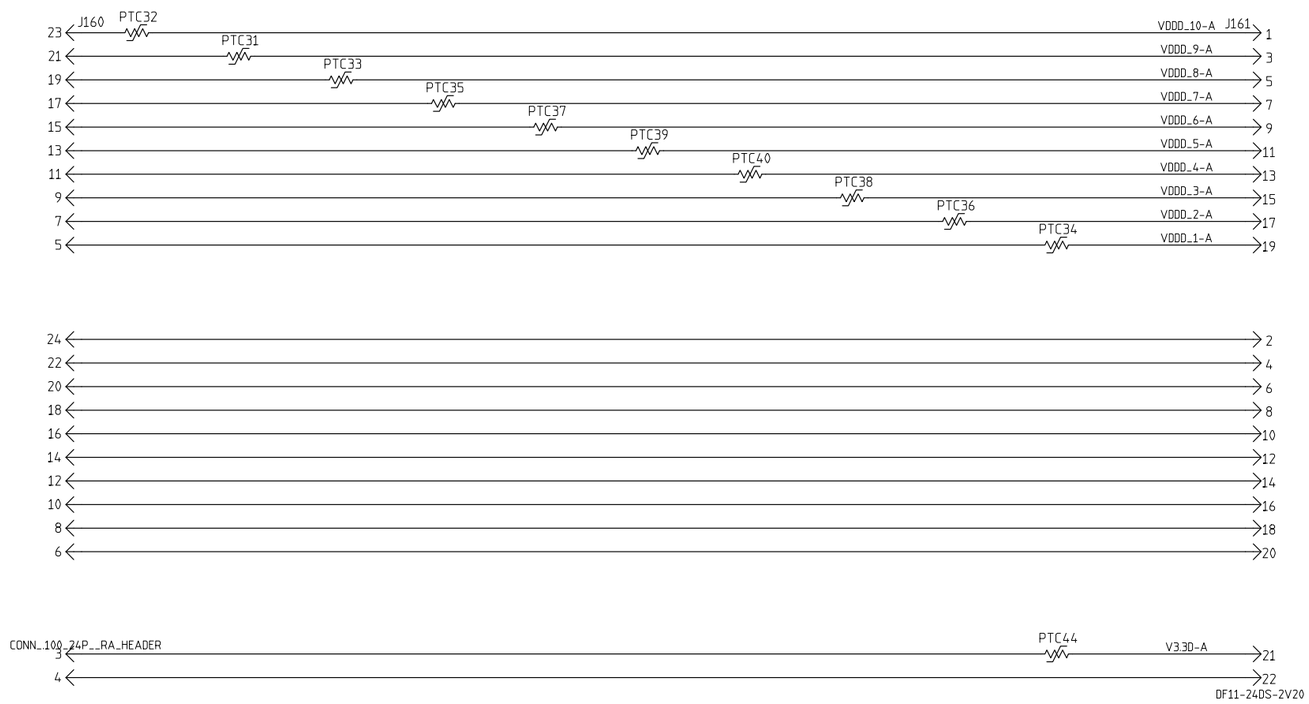

REVISION LETTER	CLASS REVIEW	REVISIONS	DATE	CHANGE BY	CHECK BY	APPROVED BY
—		ORIGINAL ISSUE	—	—	—	—

LOS ALAMOS

LOS ALAMOS NATIONAL LABORATORY
LOS ALAMOS, NEW MEXICO 87545

MENTOR 2005

	NAME	SIGNATURE	DATE	GROUP
ORIGINATED				
DESIGNED				
DRAWN	S. CHACON	S. CHACON	JUNE 2008	AOT-IC
CHECKED	M. PROKOP	M. PROKOP	JUNE 2008	AOT-RFE
PROJ. ENGR.	M. PROKOP	M. PROKOP	JUNE 2008	AOT-RFE
APPROVED				
RELEASED				

CLASSIFICATION OF: DRAWING: U
PART: U DRAWING: U

TITLE

(P-25)

HEAVY QUARK DETECTOR
DATA AQUISITION SYSTEM
CALIB. PULSER/PWR SUPPLY

TOLERANCE (UNLESS OTHERWISE NOTED)
X= ± ——— 0.XX= ± ——— ANGULAR ± ———
0.X= ± ——— 0.XXX= ± ——— FINISH ± ———

SCALE	NO. SHEETS	DRAWING NO.	SIZE	SHEET NO.
N/A	?	126Y-267912	D	16

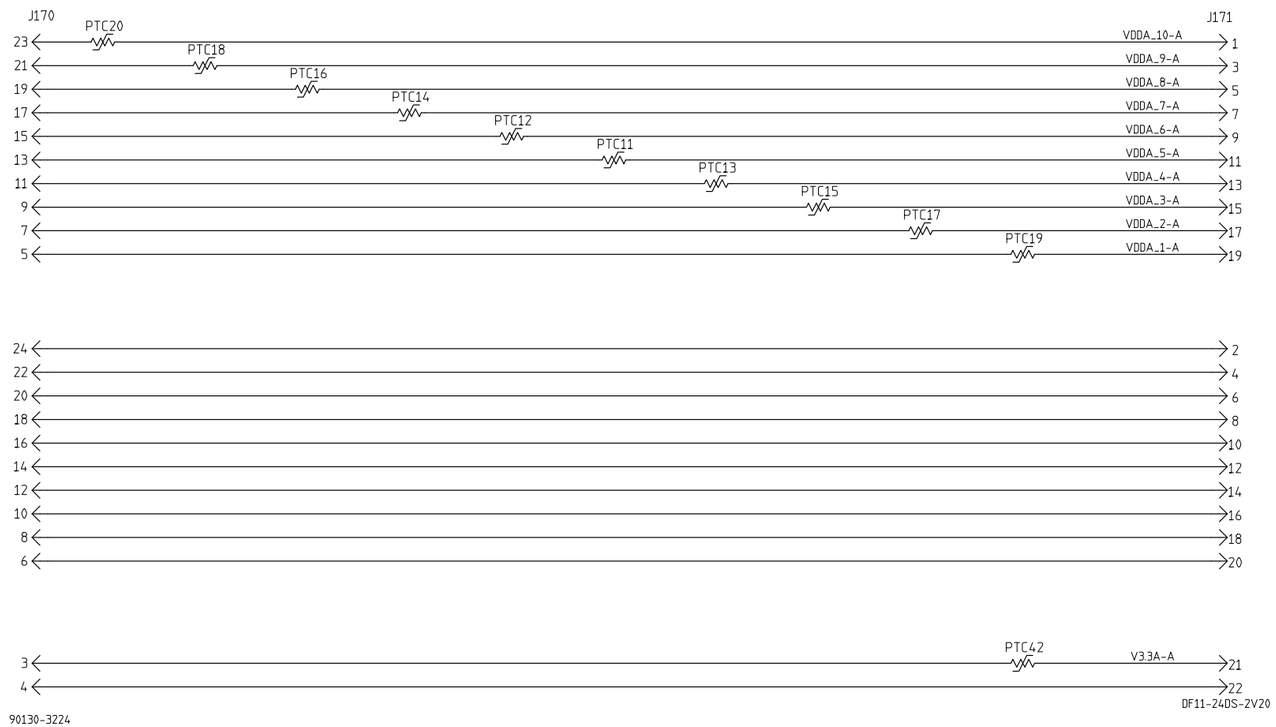

REVISION LETTER	CLASS REVISION	REVISIONS	DATE	CHANGE BY	CHECK BY	APPROVED BY
—		ORIGINAL ISSUE	—	—	—	—

LOS ALAMOS

LOS ALAMOS NATIONAL LABORATORY
LOS ALAMOS, NEW MEXICO 87545

MENTOR 2005

	NAME	SIGNATURE	DATE	GROUP
ORIGINATED				
DESIGNED				
DRAWN	S. CHACON	S. CHACON	JUNE 2008	AOT-IC
CHECKED	M. PROKOP	M. PROKOP	JUNE 2008	AOT-RFE
PROJ. ENGR.	M. PROKOP	M. PROKOP	JUNE 2008	AOT-RFE
APPROVED				
RELEASED				

CLASSIFICATION OF DRAWING: U
PART: U DRAWING: U

TITLE

(P-25)

HEAVY QUARK DETECTOR
DATA AQUISITION SYSTEM
CALIB. PULSER/PWR SUPPLY

TOLERANCE (UNLESS OTHERWISE NOTED)
X= ± ——— 0.XX= ± ——— ANGULAR ± ———
0.X= ± ——— 0.XXX= ± ——— FINISH ± ———

SCALE	NO. SHEETS	DRAWING NO.	SIZE	SHEET NO.
N/A	?	126Y-267912	D	17

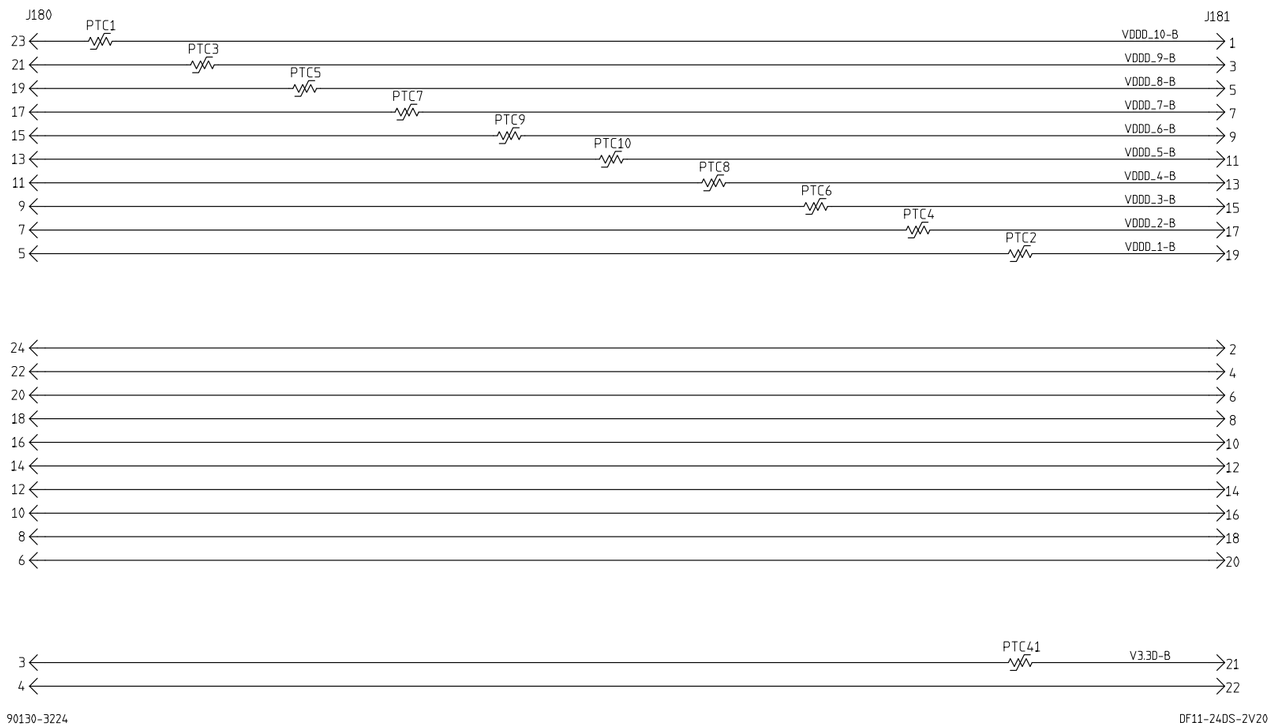

REVISION LETTER	CLASS REVIEW	REVISIONS	DATE	CHANGE BY	CHECK BY	APPROVED BY
—		ORIGINAL ISSUE	—	—	—	—

LOS ALAMOS

LOS ALAMOS NATIONAL LABORATORY
LOS ALAMOS, NEW MEXICO 87545

MENTOR 2005

	NAME	SIGNATURE	DATE	GROUP
ORIGINATED				
DESIGNED				
DRAWN	S. CHACON	S. CHACON	JUNE 2008	AOT-IC
CHECKED	M. PROKOP	M. PROKOP	JUNE 2008	AOT-RFE
PROJ. ENGR.	M. PROKOP	M. PROKOP	JUNE 2008	AOT-RFE
APPROVED				
RELEASED				

CLASSIFICATION OF DRAWING: U
PART: U DRAWING: U

TITLE

(P-25)

HEAVY QUARK DETECTOR
DATA AQUISITION SYSTEM
CALIB. PULSER/PWR SUPPLY

TOLERANCE (UNLESS OTHERWISE NOTED)

X= ± ——— 0.XX= ± ——— ANGULAR ± ———
0.X= ± ——— 0.XXX= ± ——— FINISH ± ———

SCALE	NO. SHEETS	DRAWING NO.	SIZE	SHEET NO.
N/A	?	126Y-267912	D	18

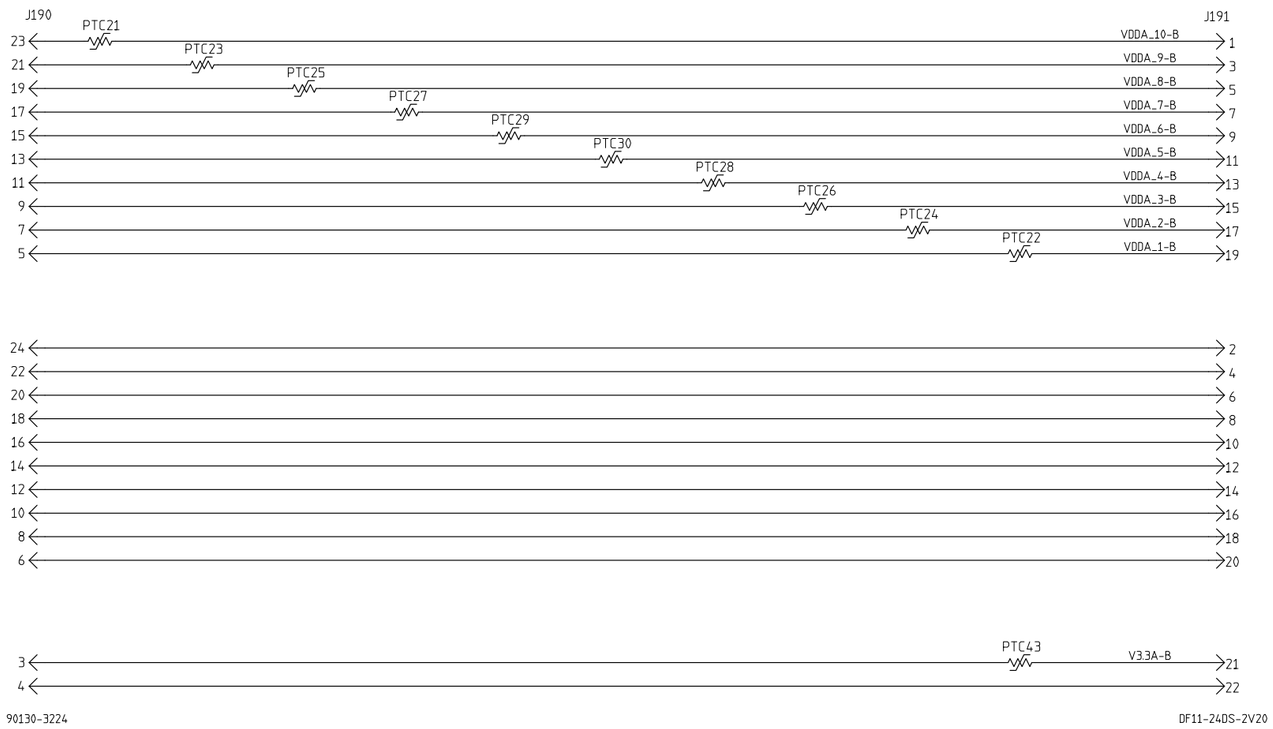

REVISION LETTER	CLASS REVIEW	REVISIONS	DATE	CHANGE BY	CHECK BY	APPROVED BY
—		ORIGINAL ISSUE	—	—	—	—

LOS ALAMOS

LOS ALAMOS NATIONAL LABORATORY
LOS ALAMOS, NEW MEXICO 87545

MENTOR 2005

	NAME	SIGNATURE	DATE	GROUP
ORIGINATED				
DESIGNED				
DRAWN	S. CHACON	S. CHACON	JUNE 2008	AOT-IC
CHECKED	M. PROKOP	M. PROKOP	JUNE 2008	AOT-RFE
PROJ. ENGR.	M. PROKOP	M. PROKOP	JUNE 2008	AOT-RFE
APPROVED				
RELEASED				

CLASSIFICATION OF DRAWING: U
PART: U DRAWING: U

TITLE

(P-25)

HEAVY QUARK DETECTOR
DATA AQUISITION SYSTEM
CALIB. PULSER/PWR SUPPLY

TOLERANCE (UNLESS OTHERWISE NOTED)
X= ± ——— 0.XX= ± ——— ANGULAR ± ———
0.X= ± ——— 0.XXX= ± ——— FINISH ± ———

SCALE	NO. SHEETS	DRAWING NO.	SIZE	SHEET NO.
N/A	?	126Y-267912	D	19

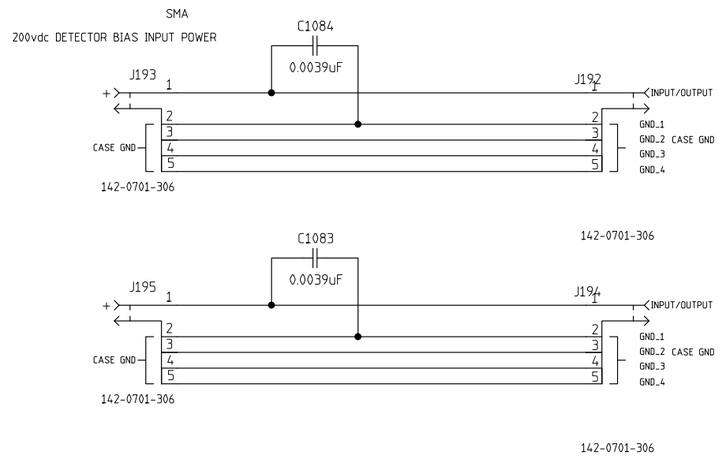

REVISION LETTER	CLASS REVIEW	REVISIONS	DATE	CHANGE BY	CHECK BY	APPROVED BY
—		ORIGINAL ISSUE	—	—	—	—

LOS ALAMOS

LOS ALAMOS NATIONAL LABORATORY
LOS ALAMOS, NEW MEXICO 87545

MENTOR 2005

	NAME	SIGNATURE	DATE	GROUP
ORIGINATED				
DESIGNED				
DRAWN	S. CHACON	S. CHACON	JUNE 2008	AOT-IC
CHECKED	M. PROKOP	M. PROKOP	JUNE 2008	AOT-RFE
PROJ. ENGR.	M. PROKOP	M. PROKOP	JUNE 2008	AOT-RFE
APPROVED				
RELEASED				

CLASSIFICATION OF DRAWING: U
PART: U DRAWING: U

TITLE

(P-25)

HEAVY QUARK DETECTOR
DATA AQUISITION SYSTEM
CALIB. PULSER/PWR SUPPLY

TOLERANCE (UNLESS OTHERWISE NOTED)

X= ± ——— 0.XX= ± ——— ANGULAR ± ———
0.X= ± ——— 0.XXX= ± ——— FINISH ± ———

SCALE	NO. SHEETS	DRAWING NO.	SIZE	SHEET NO.
N/A	?	126Y-267912	D	20

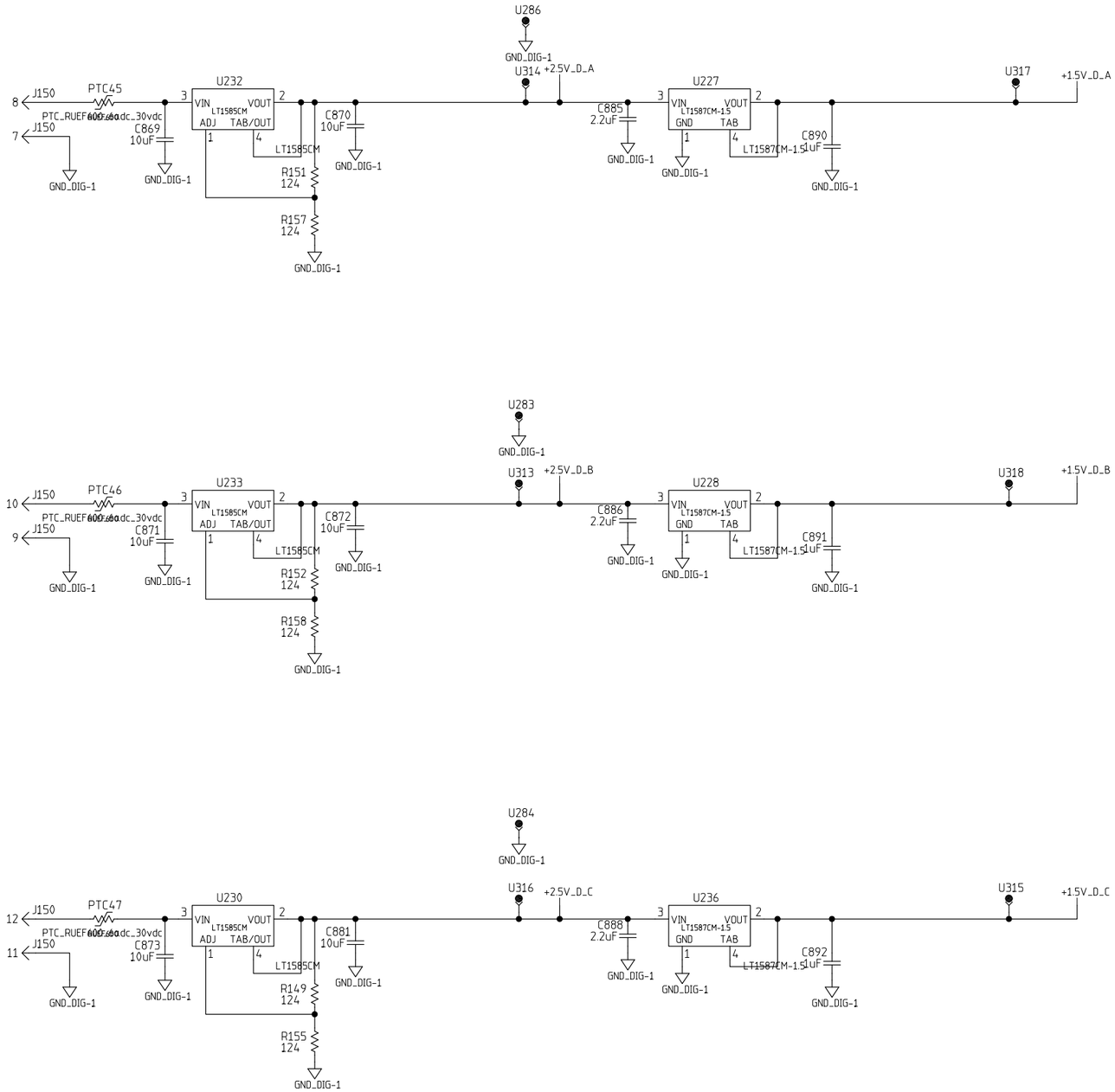

REVISION LETTER	CLASS REVIEW	REVISIONS	DATE	CHANGE BY	CHECK BY	APPROVED BY
—		ORIGINAL ISSUE	—	—	—	—

LOS ALAMOS

LOS ALAMOS NATIONAL LABORATORY
LOS ALAMOS, NEW MEXICO 87545

MENTOR 2005

	NAME	SIGNATURE	DATE	GROUP
ORIGINATED				
DESIGNED				
DRAWN	S. CHACON	S. CHACON	JUNE 2008	AOT-IC
CHECKED	M. PROKOP	M. PROKOP	JUNE 2008	AOT-RFE
PROJ. ENGR.	M. PROKOP	M. PROKOP	JUNE 2008	AOT-RFE
APPROVED				
RELEASED				

CLASSIFICATION OF: DRAWING: U
PART: U DRAWING: U

TITLE

(P-25)

HEAVY QUARK DETECTOR
DATA AQUISITION SYSTEM
FPGA/PWR SUPPLY

TOLERANCE (UNLESS OTHERWISE NOTED)
X= ± — 0.XX= ± — ANGULAR ± —
0.X= ± — 0.XXX= ± — FINISH ± —

SCALE	NO. SHEETS	DRAWING NO.	SIZE	SHEET NO.
N/A	?	126Y-267912	D	21

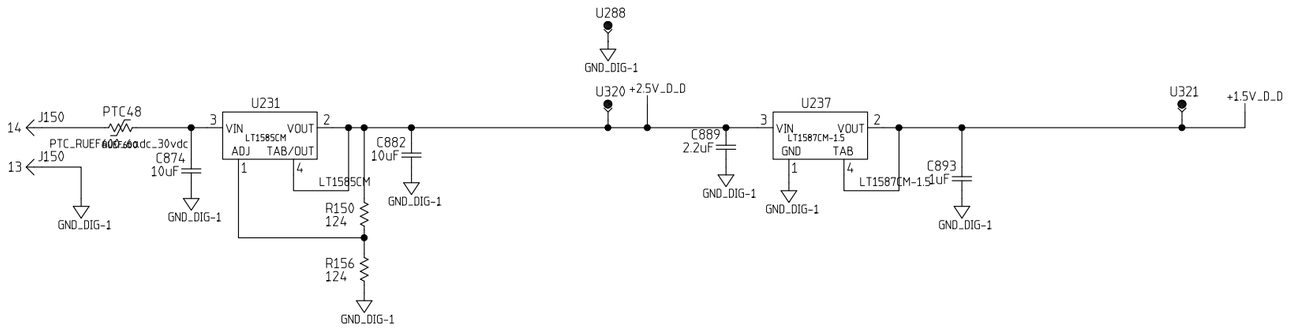

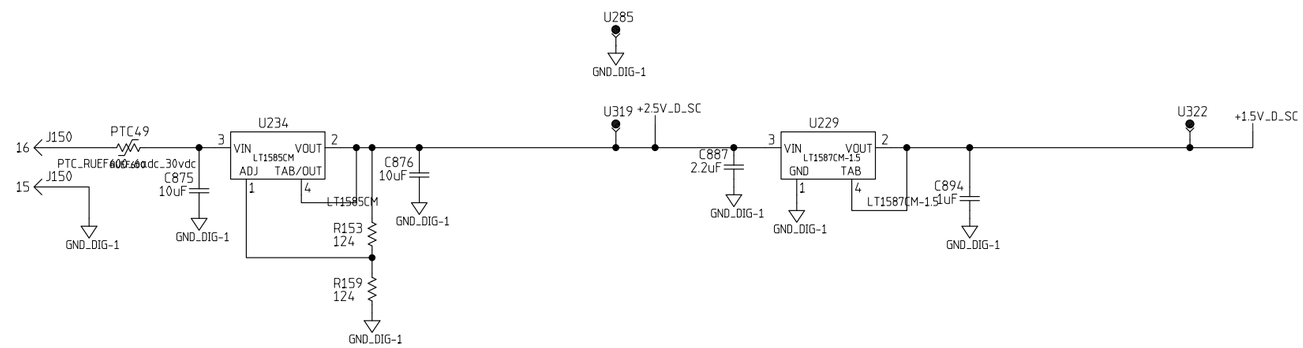

REVISION LETTER	CLASS REVIEW	REVISIONS	DATE	CHANGE BY	CHECK BY	APPROVED BY
—		ORIGINAL ISSUE	—	—	—	—

LOS ALAMOS

LOS ALAMOS NATIONAL LABORATORY
LOS ALAMOS, NEW MEXICO 87545

MENTOR 2005

	NAME	SIGNATURE	DATE	GROUP
ORIGINATED				
DESIGNED				
DRAWN	S. CHACON	S. CHACON	JUNE 2008	AOT-IC
CHECKED	M. PROKOP	M. PROKOP	JUNE 2008	AOT-RFE
PROJ. ENGR.	M. PROKOP	M. PROKOP	JUNE 2008	AOT-RFE
APPROVED				
RELEASED				

CLASSIFICATION OF: DRAWING: U

PART: U DRAWING: U

TITLE

(P-25)

HEAVY QUARK DETECTOR
DATA AQUISITION SYSTEM
FPGA/PWR SUPPLY

TOLERANCE (UNLESS OTHERWISE NOTED)

X= ± ——— 0.XX= ± ——— ANGULAR ± ———
0.X= ± ——— 0.XXX= ± ——— FINISH ± ———

SCALE	NO. SHEETS	DRAWING NO.	SIZE	SHEET NO.
N/A	?	126Y-267912	D	22

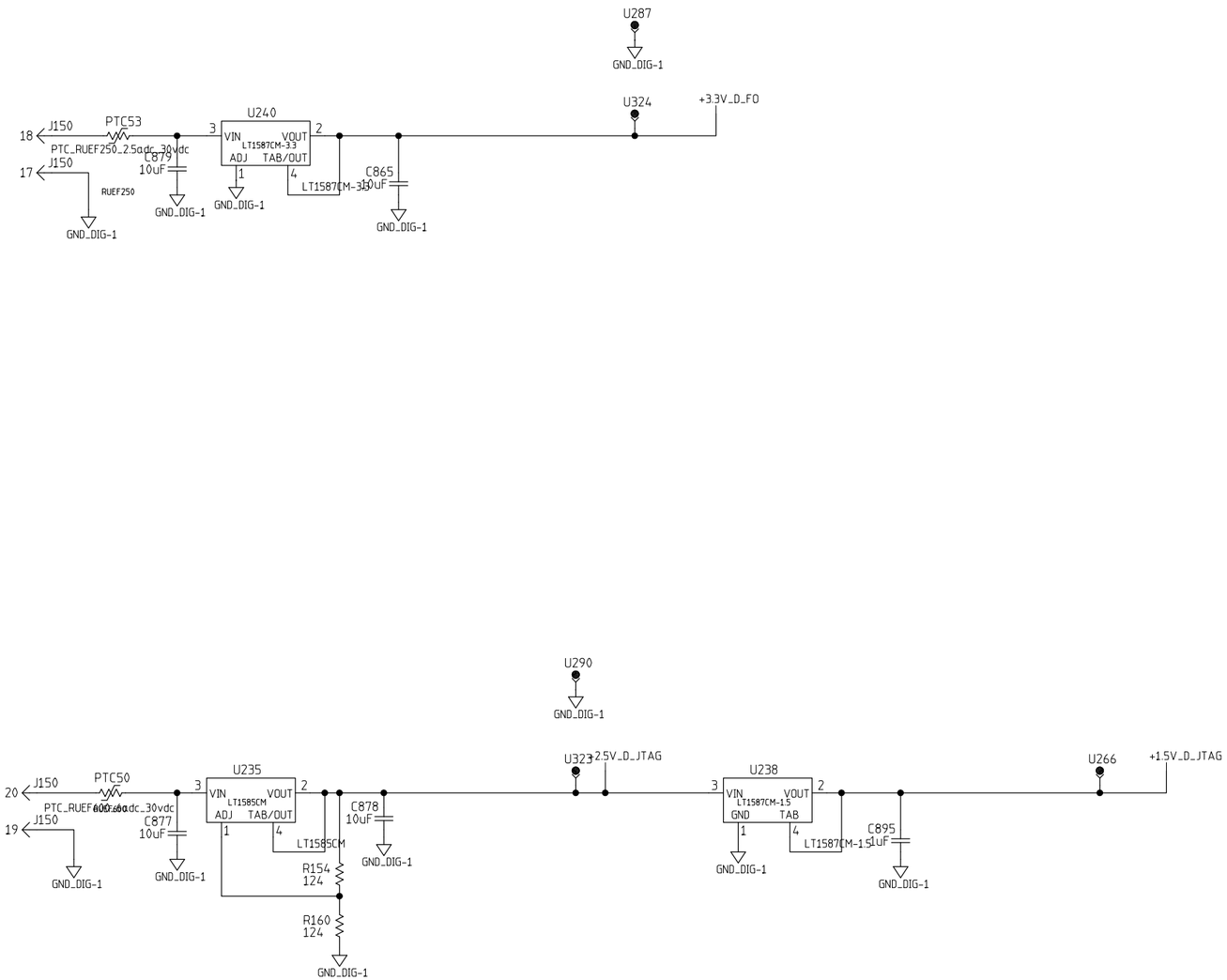

REVISION LETTER	CLASS REVISION	REVISIONS	DATE	CHANGE BY	CHECK BY	APPROVED BY
—		ORIGINAL ISSUE	—	—	—	—

LOS ALAMOS

LOS ALAMOS NATIONAL LABORATORY
LOS ALAMOS, NEW MEXICO 87545

MENTOR 2005

	NAME	SIGNATURE	DATE	GROUP
ORIGINATED				
DESIGNED				
DRAWN	S. CHACON	S. CHACON	JUNE 2008	AOT-IC
CHECKED	M. PROKOP	M. PROKOP	JUNE 2008	AOT-RFE
PROJ. ENGR.	M. PROKOP	M. PROKOP	JUNE 2008	AOT-RFE
APPROVED				
RELEASED				

CLASSIFICATION OF DRAWING: U
PART: U DRAWING: U

TITLE

(P-25)

HEAVY QUARK DETECTOR
DATA AQUISITION SYSTEM
FO/JTAG/PWR SUPPLY

TOLERANCE (UNLESS OTHERWISE NOTED)
X= ± ——— 0.XX= ± ——— ANGULAR ± ———
0.X= ± ——— 0.XXX= ± ——— FINISH ± ———

SCALE	NO. SHEETS	DRAWING NO.	SIZE	SHEET NO.
N/A	?	126Y-267912	D	23

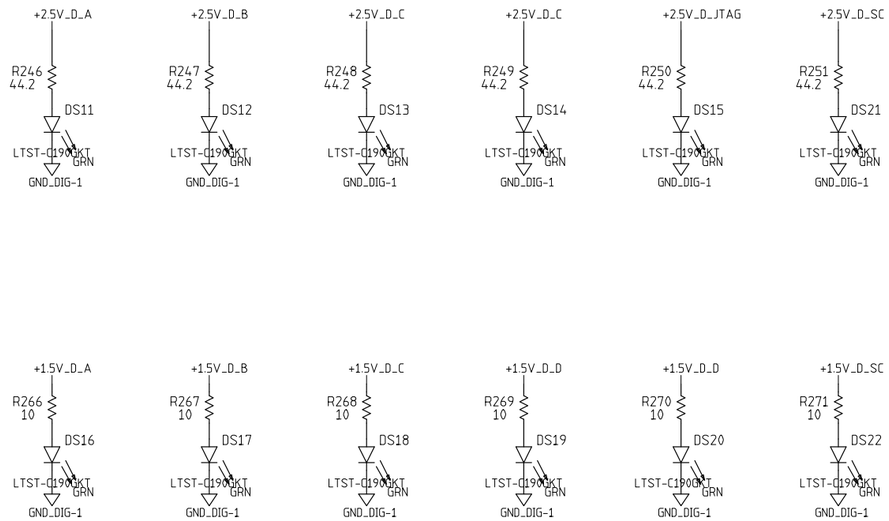

REVISION LETTER	CLASS REVIEW	REVISIONS	DATE	CHANGE BY	CHECK BY	APPROVED BY
—		ORIGINAL ISSUE	—	—	—	—

LOS ALAMOS

LOS ALAMOS NATIONAL LABORATORY
LOS ALAMOS, NEW MEXICO 87545

MENTOR 2005

	NAME	SIGNATURE	DATE	GROUP
ORIGINATED				
DESIGNED				
DRAWN	S. CHACON	S. CHACON	JUNE 2008	AOT-IC
CHECKED	M. PROKOP	M. PROKOP	JUNE 2008	AOT-RFE
PROJ. ENGR.	M. PROKOP	M. PROKOP	JUNE 2008	AOT-RFE
APPROVED				
RELEASED				

CLASSIFICATION OF DRAWING: U

PART: U DRAWING: U

TITLE

(P-25)

HEAVY QUARK DETECTOR
DATA AQUISITION SYSTEM
SC_/PWR SUPPLY

TOLERANCE (UNLESS OTHERWISE NOTED)

X= ± ——— 0.XX= ± ——— ANGULAR ± ———
0.X= ± ——— 0.XXX= ± ——— FINISH ± ———

SCALE	NO. SHEETS	DRAWING NO.	SIZE	SHEET NO.
N/A	?	126Y-267912	D	24

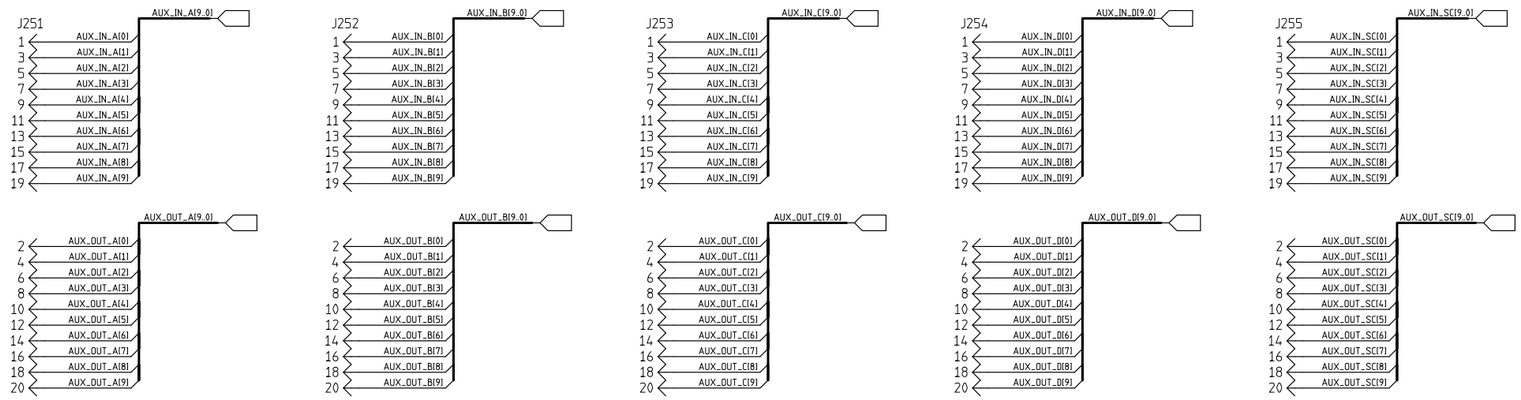

REVISION LETTER	CLASS REVIEW	REVISIONS	DATE	CHANGE BY	CHECK BY	APPROVED BY
—		ORIGINAL ISSUE	—	—	—	—

LOS ALAMOS

LOS ALAMOS NATIONAL LABORATORY
LOS ALAMOS, NEW MEXICO 87545

MENTOR 2005

	NAME	SIGNATURE	DATE	GROUP
ORIGINATED				
DESIGNED				
DRAWN	S. CHACON	S. CHACON	JUNE 2008	AOT-IC
CHECKED	M. PROKOP	M. PROKOP	JUNE 2008	AOT-RFE
PROJ. ENGR.	M. PROKOP	M. PROKOP	JUNE 2008	AOT-RFE
APPROVED				
RELEASED				

CLASSIFICATION OF: DRAWING: U
PART: U DRAWING: U

TITLE

(P-25)

HEAVY QUARK DETECTOR
DATA AQUISITION SYSTEM
un-used gates

TOLERANCE (UNLESS OTHERWISE NOTED)
X= ± ——— 0.XX= ± ——— ANGULAR ± ———
0.X= ± ——— 0.XXX= ± ——— FINISH ± ———

SCALE	NO. SHEETS	DRAWING NO.	SIZE	SHEET NO.
N/A	?	126Y-267912	D	25

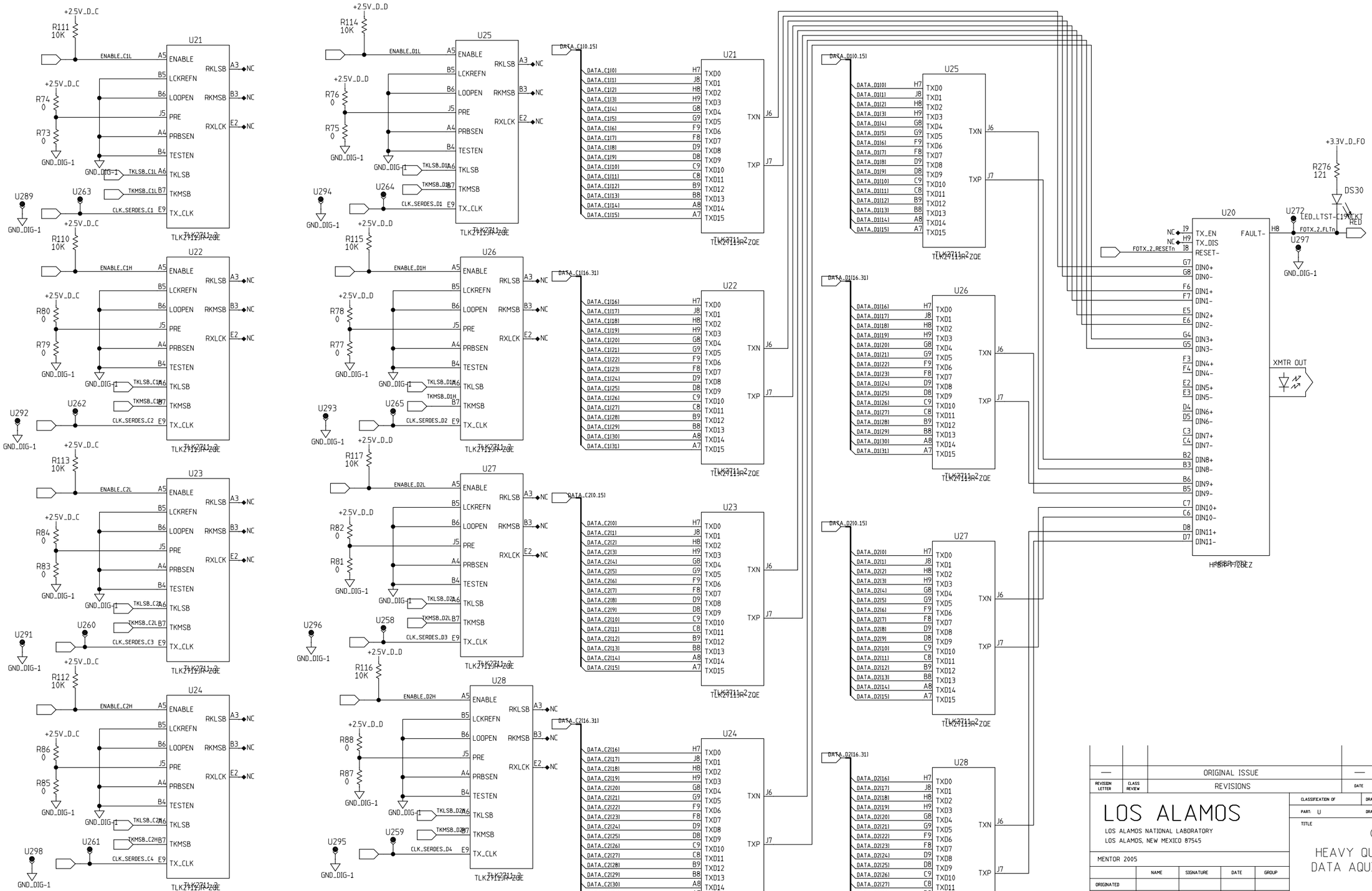

REVISION LETTER	CLASS REVIEW	REVISIONS	DATE	CHANGE BY	CHECK BY	APPROVED BY
—		ORIGINAL ISSUE	—	—	—	—

LOS ALAMOS

LOS ALAMOS NATIONAL LABORATORY
LOS ALAMOS, NEW MEXICO 87545

MENTOR 2005

	NAME	SIGNATURE	DATE	GROUP
ORIGINATED				
DESIGNED				
DRAWN	S. CHACON	S. CHACON	JUNE 2008	AOT-IC
CHECKED	M. PROKOP	M. PROKOP	JUNE 2008	AOT-RFE
PROJ. ENGR.	M. PROKOP	M. PROKOP	JUNE 2008	AOT-RFE
APPROVED				
RELEASED				

CLASSIFICATION OF: U — DRAWING: U
PART: U — DRAWING: U

TITLE

(P-25)

HEAVY QUARK DETECTOR
DATA AQUISITION SYSTEM

TOLERANCE (UNLESS OTHERWISE NOTED)
X= ± — 0.XX= ± — ANGULAR ± —
0.X= ± — 0.XXX= ± — FINISH ± —

SCALE: N/A — NO. SHEETS: ? — DRAWING NO. 126Y-267912 — SIZE D — SHEET NO. 26

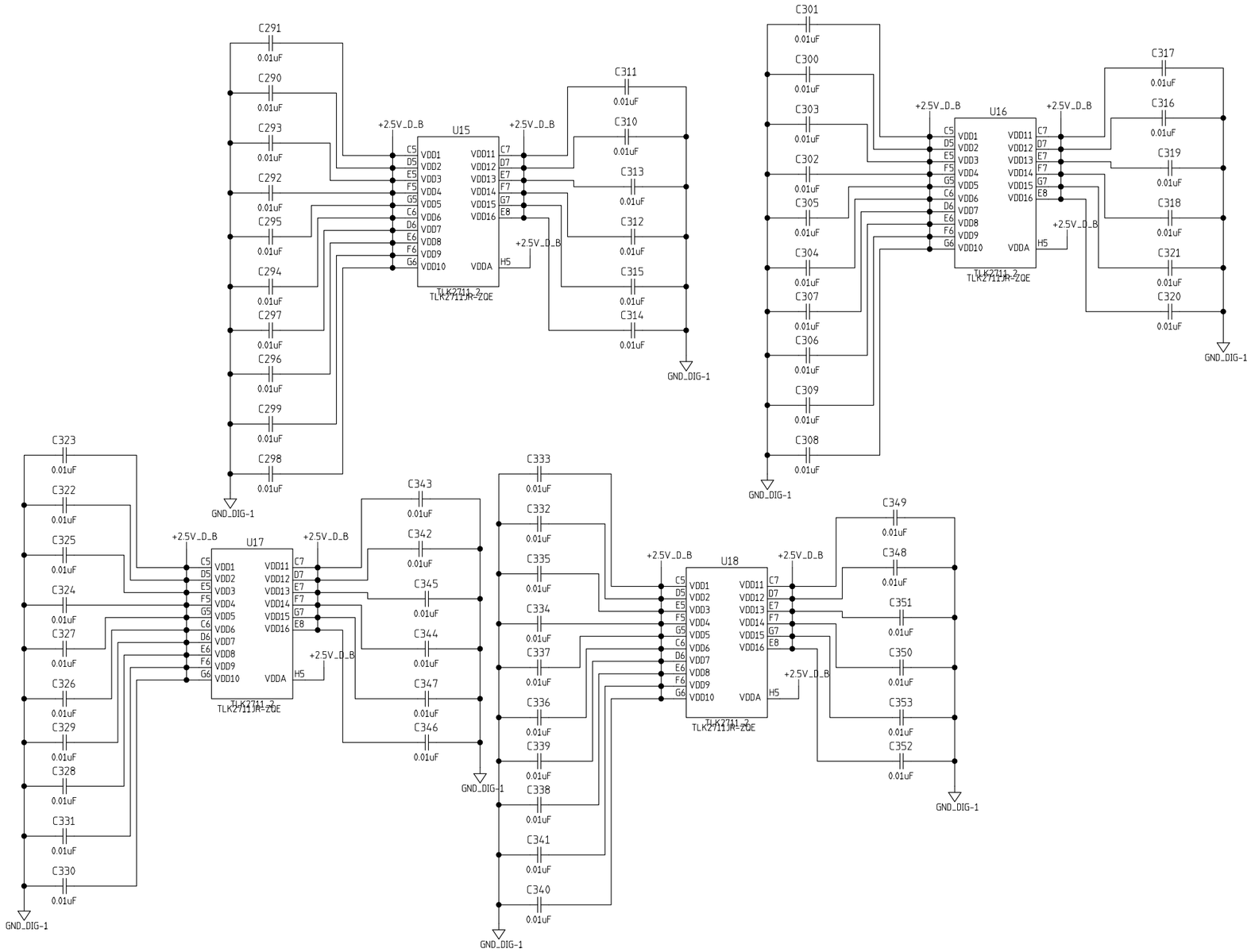

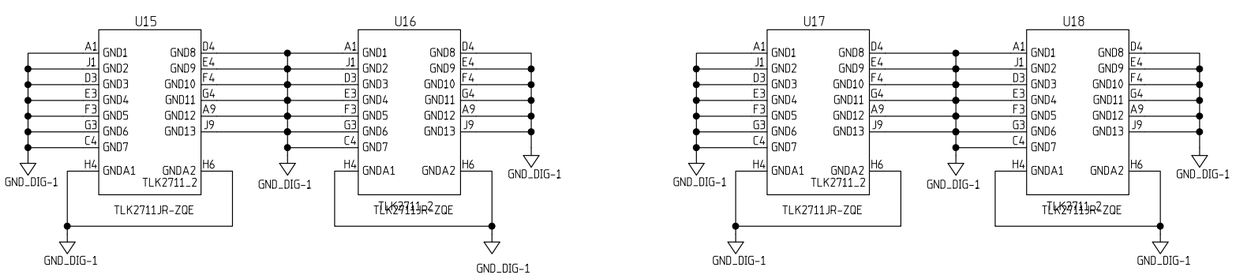

REVISION LETTER	CLASS REVIEW	REVISIONS	DATE	CHANGE BY	CHECK BY	APPROVED BY
—		ORIGINAL ISSUE	—	—	—	—

LOS ALAMOS

LOS ALAMOS NATIONAL LABORATORY
LOS ALAMOS, NEW MEXICO 87545

MENTOR 2005

	NAME	SIGNATURE	DATE	GROUP
ORIGINATED				
DESIGNED				
DRAWN	S. CHACON	S. CHACON	JUNE 2008	AOT-IC
CHECKED	M. PROKOP	M. PROKOP	JUNE 2008	AOT-RFE
PROJ. ENGR.	M. PROKOP	M. PROKOP	JUNE 2008	AOT-RFE
APPROVED				
RELEASED				

CLASSIFICATION OF DRAWING: U
PART: U DRAWING: U

TITLE

(P-25)

HEAVY QUARK DETECTOR
DATA AQUISITION SYSTEM

TOLERANCE (UNLESS OTHERWISE NOTED)
X= ± ——— 0.XX= ± ——— ANGULAR ± ———
0.X= ± ——— 0.XXX= ± ——— FINISH ± ———

SCALE	NO. SHEETS	DRAWING NO.	SIZE	SHEET NO.
N/A	?	126Y-267912	D	27

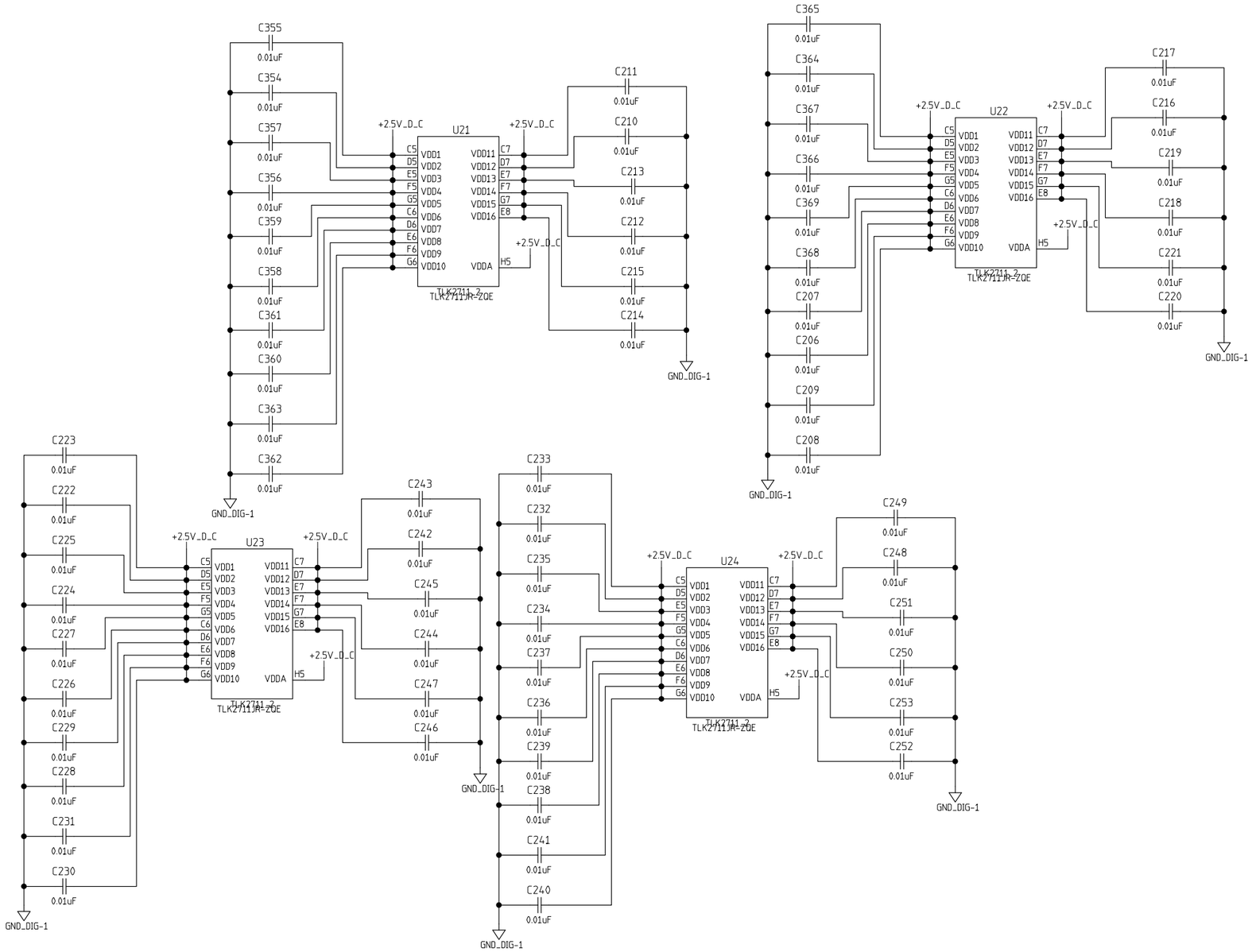

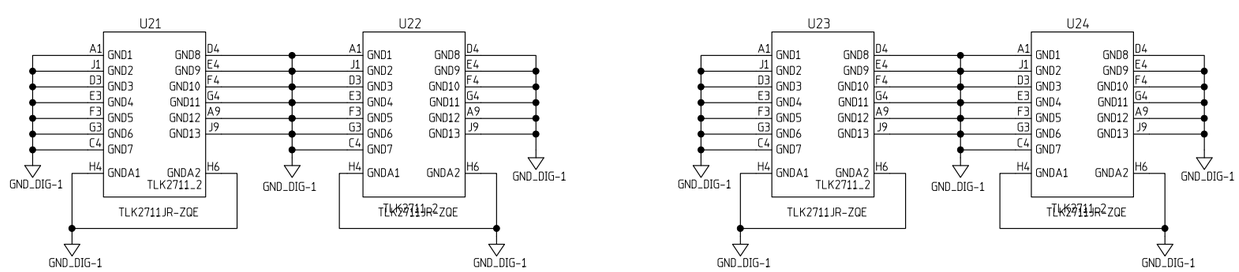

REVISION LETTER	CLASS REVIEW	REVISIONS	DATE	CHANGE BY	CHECK BY	APPROVED BY
—		ORIGINAL ISSUE	—	—	—	—

LOS ALAMOS

LOS ALAMOS NATIONAL LABORATORY
LOS ALAMOS, NEW MEXICO 87545

MENTOR 2005

	NAME	SIGNATURE	DATE	GROUP
ORIGINATED				
DESIGNED				
DRAWN	S. CHACON	S. CHACON	JUNE 2008	AOT-IC
CHECKED	M. PROKOP	M. PROKOP	JUNE 2008	AOT-RFE
PROJ. ENGR.	M. PROKOP	M. PROKOP	JUNE 2008	AOT-RFE
APPROVED				
RELEASED				

CLASSIFICATION OF: DRAWING: U
PART: U DRAWING: U

TITLE
(P-25)
HEAVY QUARK DETECTOR
DATA AQUISITION SYSTEM

TOLERANCE (UNLESS OTHERWISE NOTED)
X= ± ——— 0.XX= ± ——— ANGULAR ± ———
0.X= ± ——— 0.XXX= ± ——— FINISH ± ———

SCALE	NO. SHEETS	DRAWING NO.	SIZE	SHEET NO.
N/A	?	126Y-267912	D	28

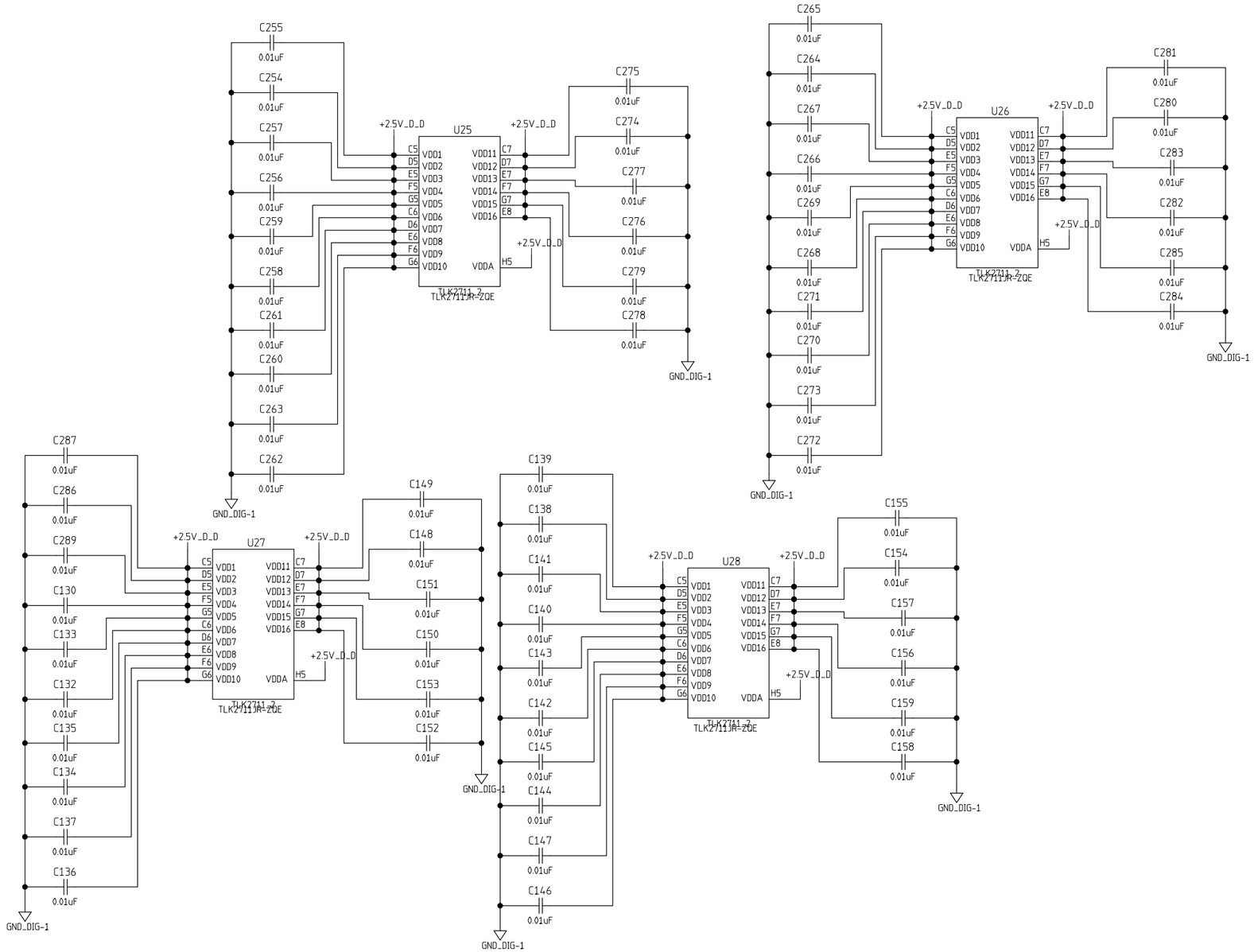

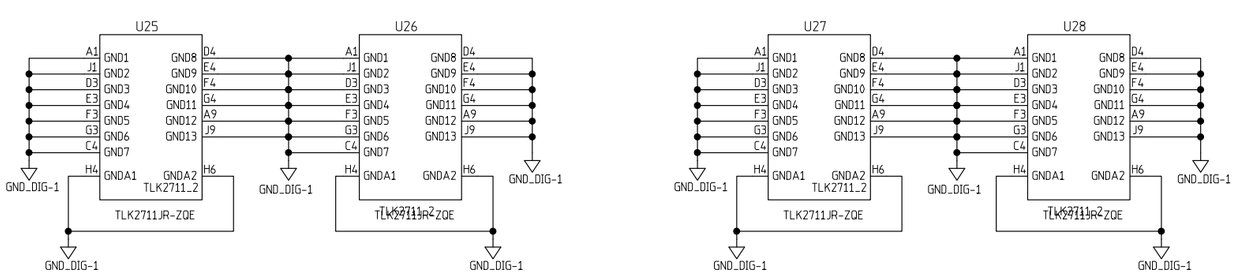

REVISION LETTER	CLASS REVIEW	REVISIONS	DATE	CHANGE BY	CHECK BY	APPROVED BY
—		ORIGINAL ISSUE	—	—	—	—

LOS ALAMOS
LOS ALAMOS NATIONAL LABORATORY
LOS ALAMOS, NEW MEXICO 87545

MENTOR 2005

	NAME	SIGNATURE	DATE	GROUP
ORIGINATED				
DESIGNED				
DRAWN	S. CHACON	S. CHACON	JUNE 2008	AOT-IC
CHECKED	M. PROKOP	M. PROKOP	JUNE 2008	AOT-RFE
PROJ. ENGR.	M. PROKOP	M. PROKOP	JUNE 2008	AOT-RFE
APPROVED				
RELEASED				

CLASSIFICATION OF: DRAWING: U
PART: U DRAWING: U

TITLE
(P-25)
HEAVY QUARK DETECTOR
DATA AQUISITION SYSTEM

TOLERANCE (UNLESS OTHERWISE NOTED)
X= ± ___ 0.XX= ± ___ ANGULAR ± ___
0.X= ± ___ 0.XXX= ± ___ FINISH ± ___

SCALE	NO. SHEETS	DRAWING NO.	SIZE	SHEET NO.
N/A	?	126Y-267912	D	29

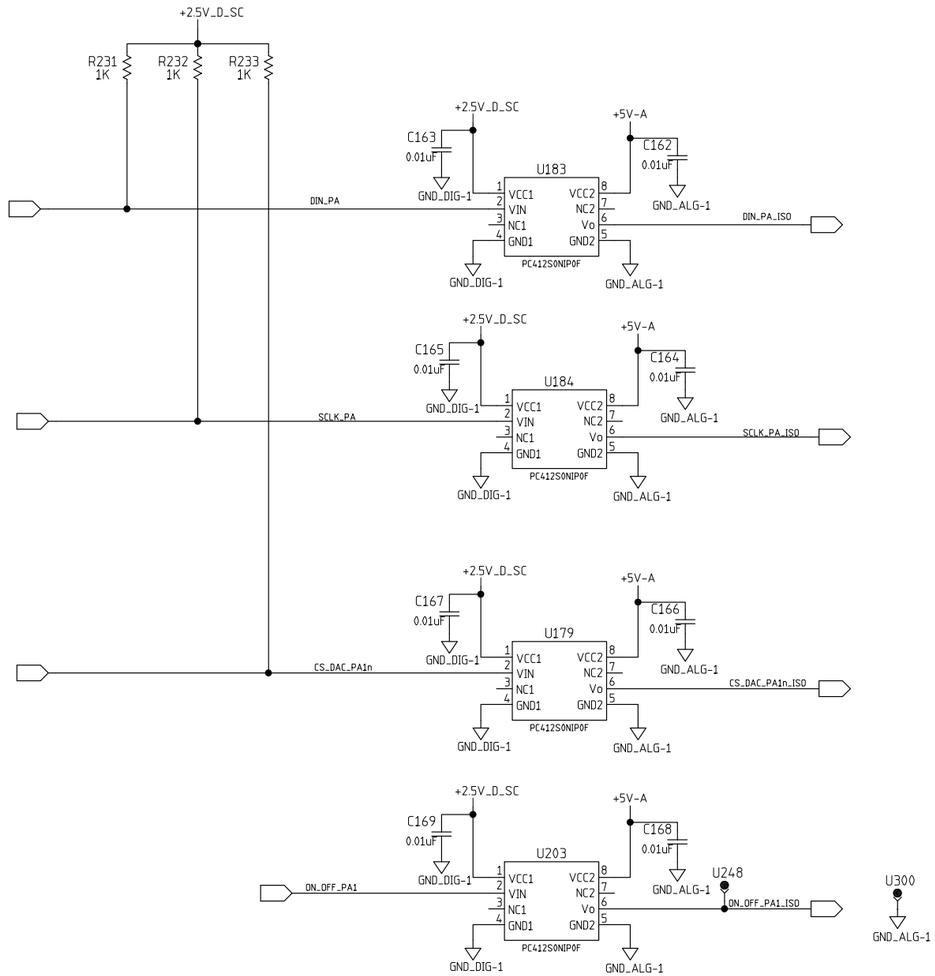

REVISION LETTER	CLASS REVIEW	REVISIONS	DATE	CHANGE BY	CHECK BY	APPROVED BY
—		ORIGINAL ISSUE	—	—	—	—

LOS ALAMOS

LOS ALAMOS NATIONAL LABORATORY
LOS ALAMOS, NEW MEXICO 87545

MENTOR 2005

	NAME	SIGNATURE	DATE	GROUP
ORIGINATED				
DESIGNED				
DRAWN	S. CHACON	S. CHACON	JUNE 2008	AOT-IC
CHECKED	M. PROKOP	M. PROKOP	JUNE 2008	AOT-RFE
PROJ. ENGR.	M. PROKOP	M. PROKOP	JUNE 2008	AOT-RFE
APPROVED				
RELEASED				

CLASSIFICATION OF DRAWING: U

PART: U DRAWING: U

TITLE

(P-25)

HEAVY QUARK DETECTOR
DATA AQUISITION SYSTEM

TOLERANCE (UNLESS OTHERWISE NOTED)

X= ± ——— 0.XX= ± ——— ANGULAR ± ———
0.X= ± ——— 0.XXX= ± ——— FINISH ± ———

SCALE	NO. SHEETS	DRAWING NO.	SIZE	SHEET NO.
N/A	?	126Y-267912	D	30

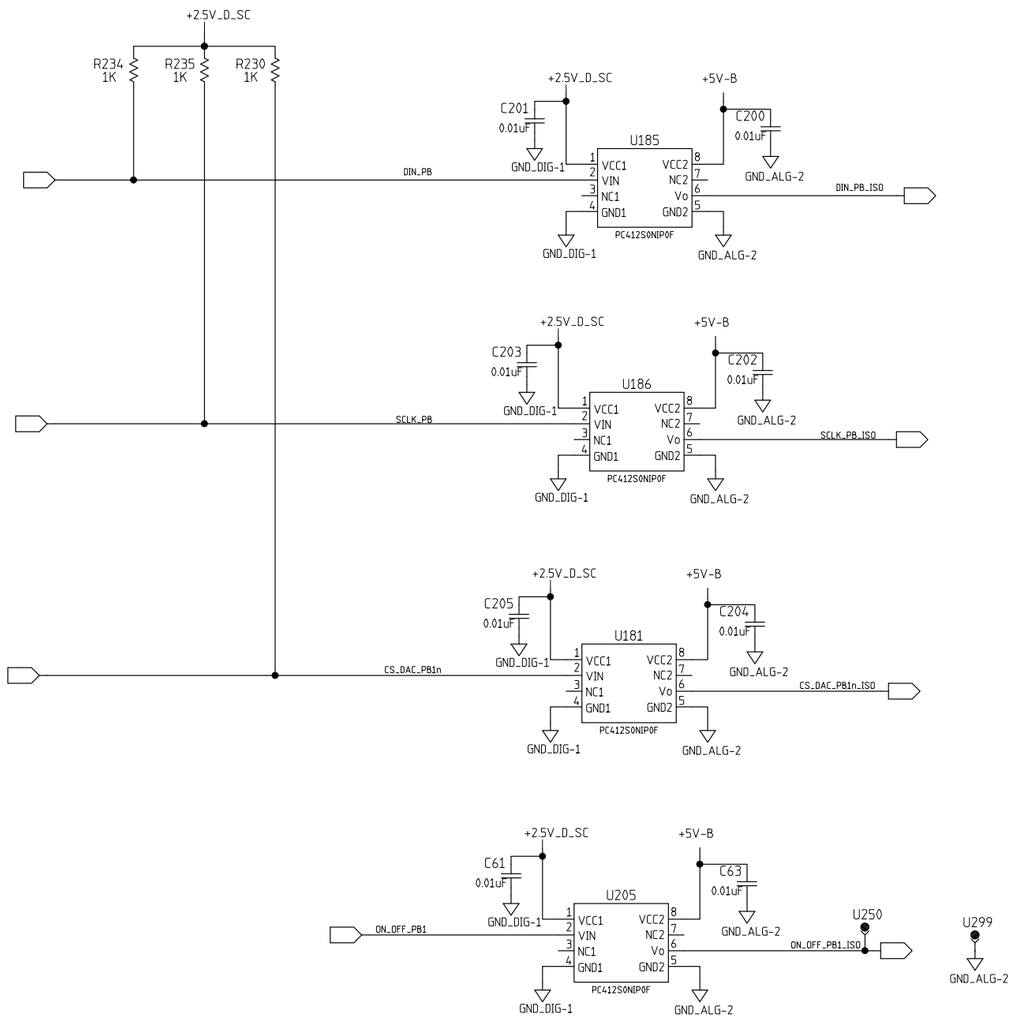

REVISION LETTER	CLASS REVIEW	REVISIONS	DATE	CHANGE BY	CHECK BY	APPROVED BY
—		ORIGINAL ISSUE	—	—	—	—

LOS ALAMOS

LOS ALAMOS NATIONAL LABORATORY
LOS ALAMOS, NEW MEXICO 87545

MENTOR 2005

	NAME	SIGNATURE	DATE	GROUP
ORIGINATED				
DESIGNED				
DRAWN	S. CHACON	S. CHACON	JUNE 2008	AOT-IC
CHECKED	M. PROKOP	M. PROKOP	JUNE 2008	AOT-RFE
PROJ. ENGR.	M. PROKOP	M. PROKOP	JUNE 2008	AOT-RFE
APPROVED				
RELEASED				

CLASSIFICATION OF DRAWING: U

PART: U DRAWING: U

TITLE

(P-25)

HEAVY QUARK DETECTOR
DATA AQUISITION SYSTEM

TOLERANCE (UNLESS OTHERWISE NOTED)

X= ± ——— 0.XX= ± ——— ANGULAR ± ———
0.X= ± ——— 0.XXX= ± ——— FINISH ± ———

SCALE	NO. SHEETS	DRAWING NO.	SIZE	SHEET NO.
N/A	?	126Y-267912	D	31

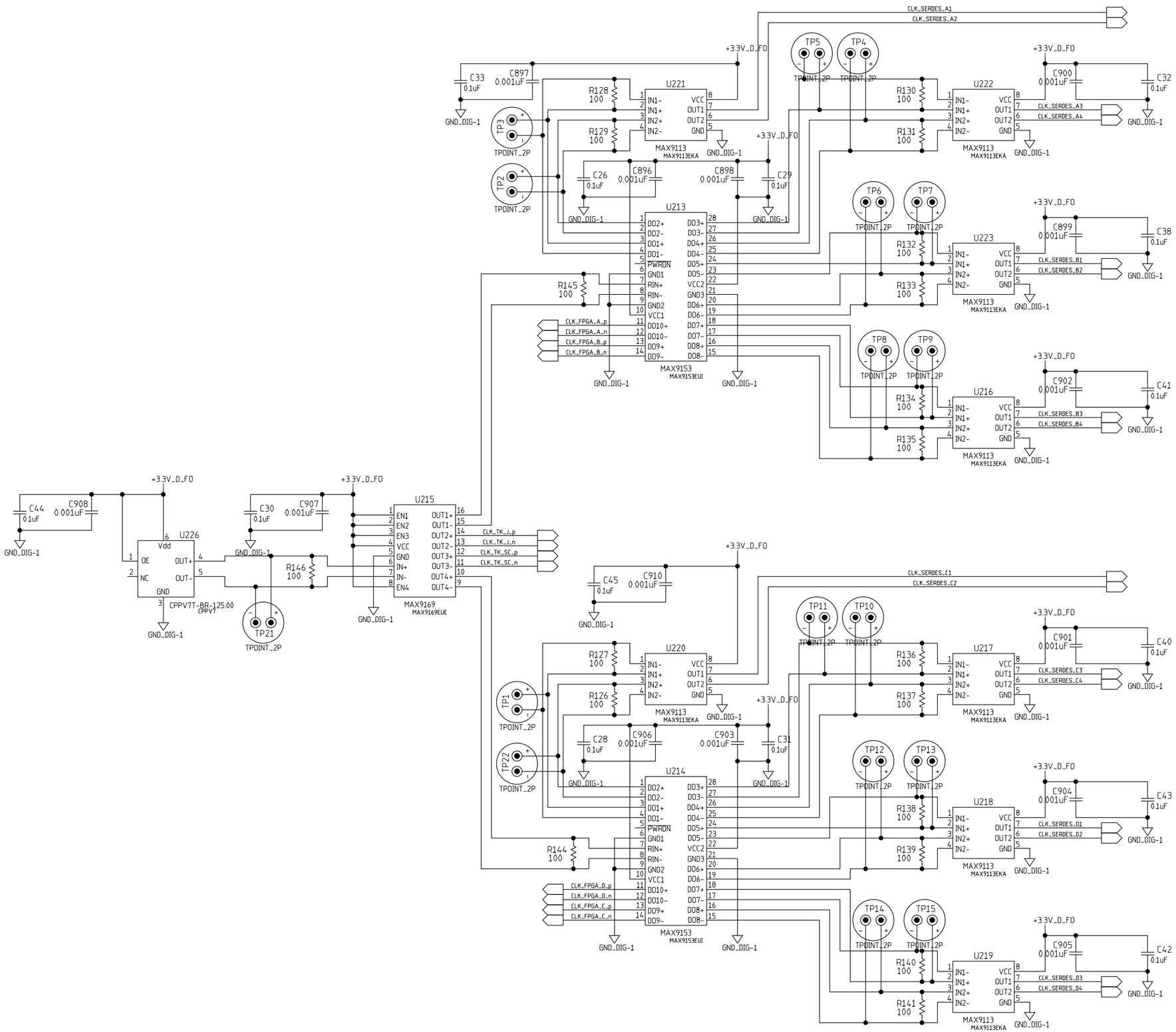

REVISION LETTER	CLASS REVIEW	REVISIONS	DATE	CHANGE BY	CHECK BY	APPROVED BY
—		ORIGINAL ISSUE	—	—	—	—

LOS ALAMOS

LOS ALAMOS NATIONAL LABORATORY
LOS ALAMOS, NEW MEXICO 87545

MENTOR 2005

	NAME	SIGNATURE	DATE	GROUP
ORIGINATED				
DESIGNED				
DRAWN	S. CHACON	S. CHACON	JUNE 2008	AOT-IC
CHECKED	M. PROKOP	M. PROKOP	JUNE 2008	AOT-RFE
PROJ. ENGR.	M. PROKOP	M. PROKOP	JUNE 2008	AOT-RFE
APPROVED				
RELEASED				

CLASSIFICATION OF DRAWING: U
PART: U DRAWING: U

TITLE

(P-25)

HEAVY QUARK DETECTOR
DATA AQUISITION SYSTEM

TOLERANCE (UNLESS OTHERWISE NOTED)
X± ± 0.XX± ± ANGULAR ±
0.X± ± 0.XXX± ± FINISH ±

SCALE	NO. SHEETS	DRAWING NO.	SIZE	SHEET NO.
N/A	?	126Y-267912	D	32

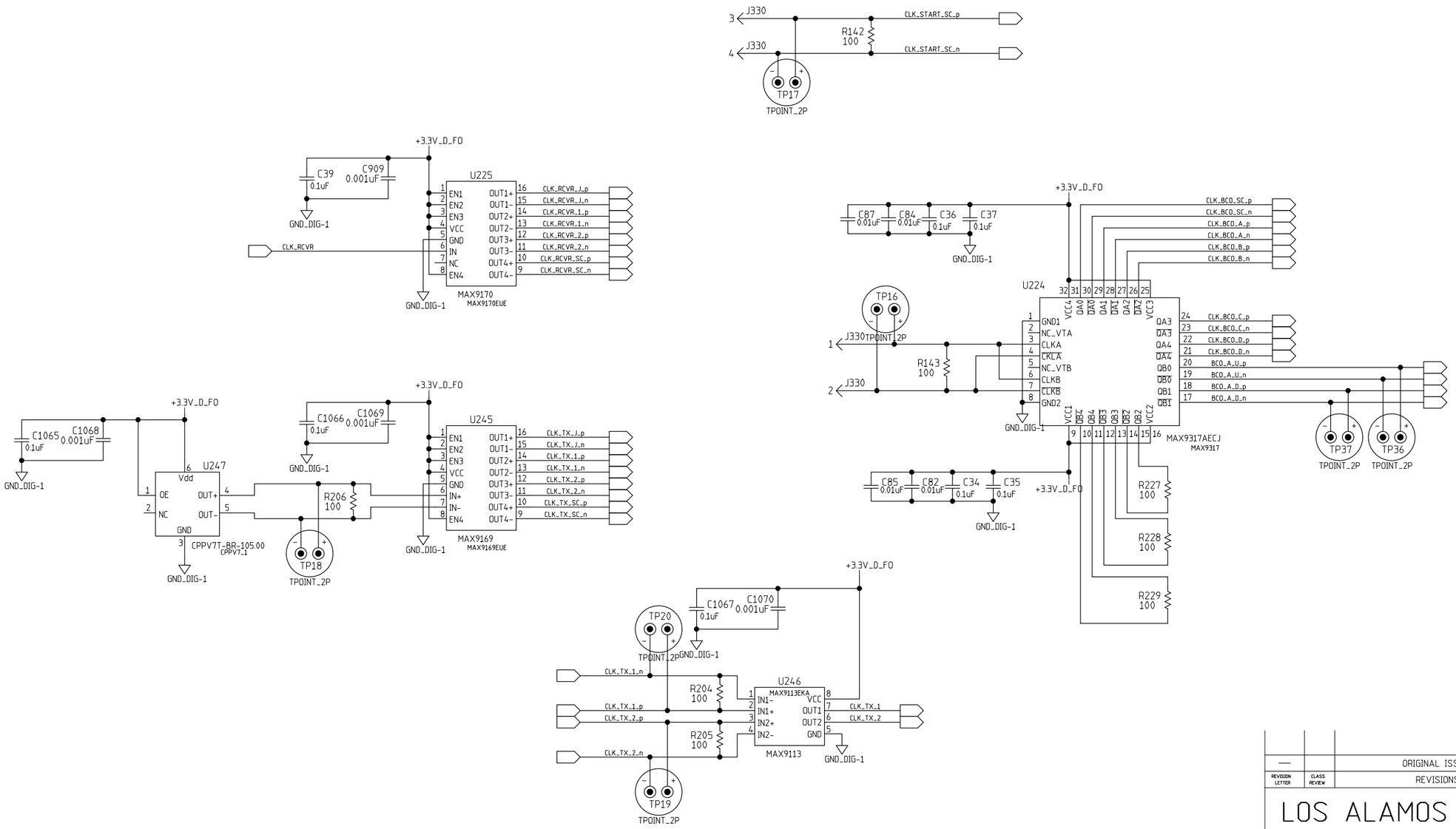

REVISION LETTER	CLASS REVIEW	REVISIONS	DATE	CHANGE BY	CHECK BY	APPROVED BY
—		ORIGINAL ISSUE	—	—	—	—

LOS ALAMOS

LOS ALAMOS NATIONAL LABORATORY
LOS ALAMOS, NEW MEXICO 87545

MENTOR 2005

	NAME	SIGNATURE	DATE	GROUP
ORIGINATED				
DESIGNED				
DRAWN	S. CHACON	S. CHACON	JUNE 2008	AOT-IC
CHECKED	M. PROKOP	M. PROKOP	JUNE 2008	AOT-RFE
PROJ. ENGR.	M. PROKOP	M. PROKOP	JUNE 2008	AOT-RFE
APPROVED				
RELEASED				

CLASSIFICATION OF DRAWING: U

PART: U DRAWING: U

TITLE

(P-25)

HEAVY QUARK DETECTOR
DATA AQUISITION SYSTEM

TOLERANCE (UNLESS OTHERWISE NOTED)

X= ± — 0.XX= ± — ANGULAR ± —
0.X= ± — 0.XXX= ± — FINISH ± —

SCALE	NO. SHEETS	DRAWING NO.	SIZE	SHEET NO.
N/A	?	126Y-267912	D	33

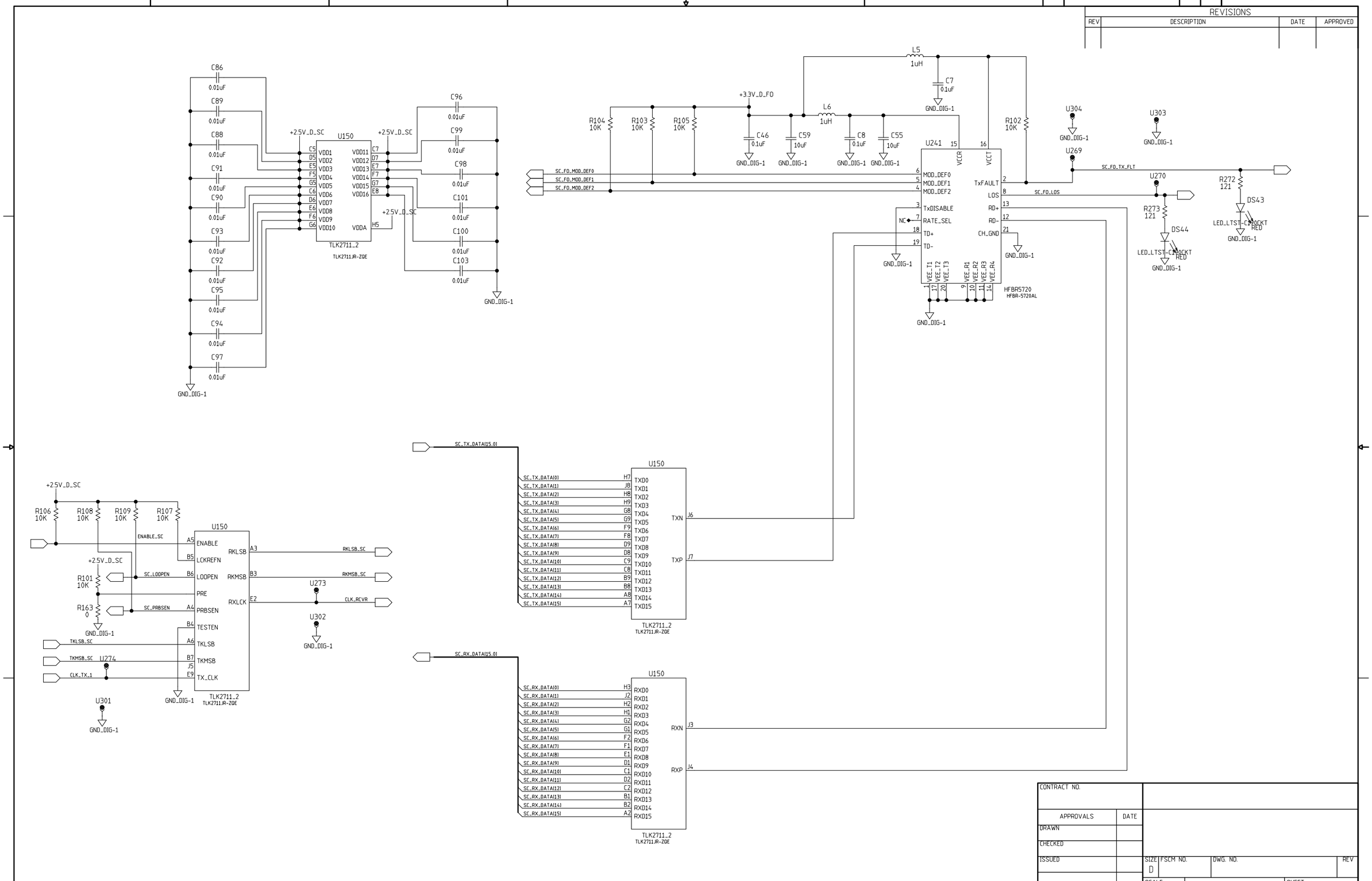
U150
TLK2711_2
TLK2711JR-ZQE
U241
HFBR5720
HFBR-5720AL
+2.5V_D_SC
+3.3V_D_FO
GND_DIG-1
SC_FO_MOD_DEF0
SC_FO_MOD_DEF1
SC_FO_MOD_DEF2
SC_FO_TX_FLT
SC_FO_LOS
SC_TX_DATA[15.0]
SC_RX_DATA[15.0]
ENABLE_SC
SC_LOOPEN
SC_PRBSEN
TKLSB_SC
TKMSB_SC
CLK_TX_1
RKLSB_SC
RKMSB_SC
CLK_RCVR
U273
U302
U274
U301
U304
U303
U269
U270
DS43
DS44
LED_LTST-C190CKT
RED
REVISIONS
REV
DESCRIPTION
DATE
APPROVED
DWG. NO.
SH.
CONTRACT NO.
APPROVALS
DRAWN
CHECKED
ISSUED
SIZE
D
FSCM NO.
DWG. NO.
SCALE
SHEET

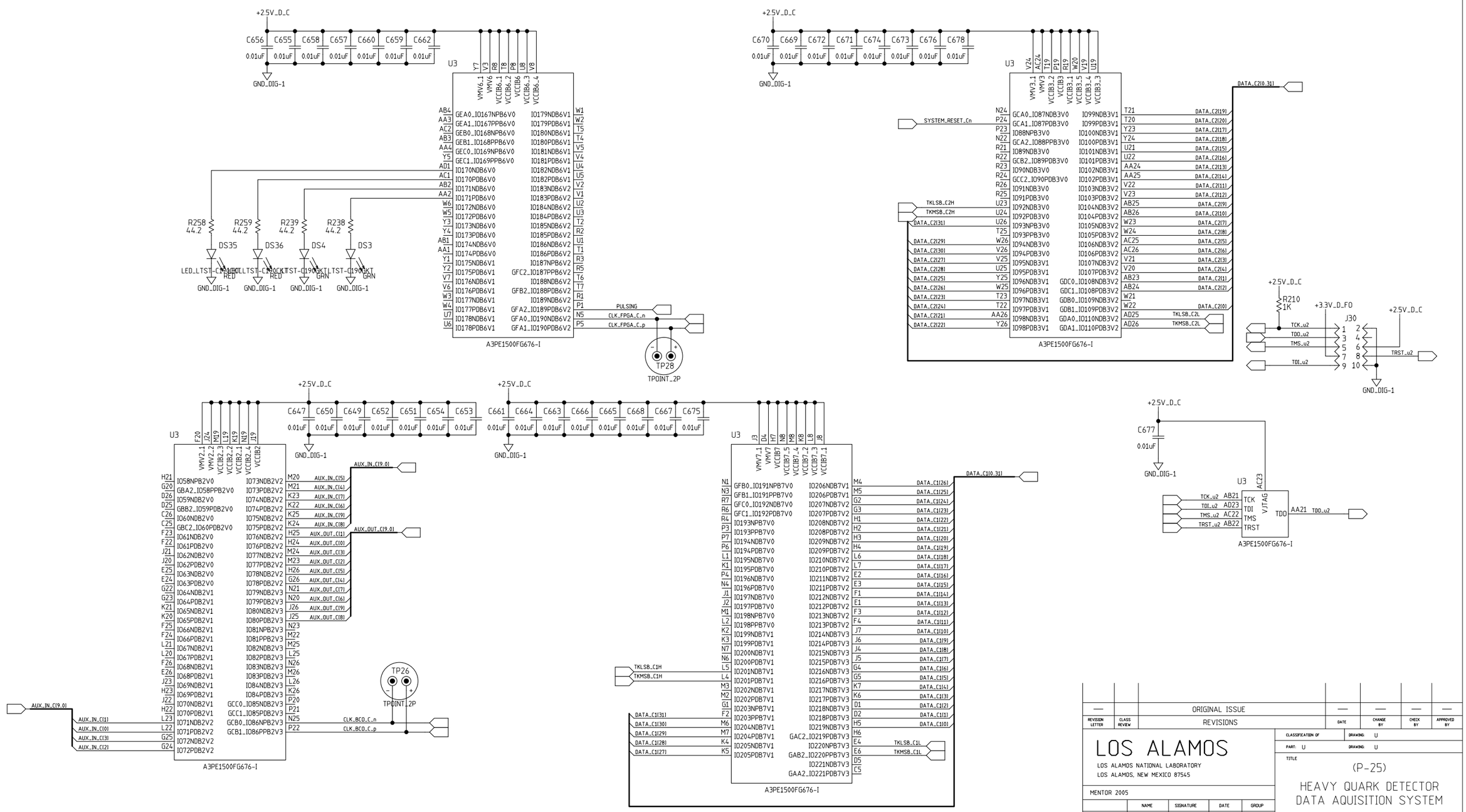

REVISION LETTER	CLASS REVIEW	REVISIONS	DATE	CHANGE BY	CHECK BY	APPROVED BY
—		ORIGINAL ISSUE	—	—	—	—

LOS ALAMOS

LOS ALAMOS NATIONAL LABORATORY
LOS ALAMOS, NEW MEXICO 87545

MENTOR 2005

	NAME	SIGNATURE	DATE	GROUP
ORIGINATED				
DESIGNED				
DRAWN	S. CHACON	S. CHACON	JUNE 2008	AOT-IC
CHECKED	M. PROKOP	M. PROKOP	JUNE 2008	AOT-RFE
PROJ. ENGR.	M. PROKOP	M. PROKOP	JUNE 2008	AOT-RFE
APPROVED				
RELEASED				

CLASSIFICATION OF: DRAWING: U
PART: U DRAWING: U

TITLE

(P-25)

HEAVY QUARK DETECTOR
DATA AQUISITION SYSTEM

TOLERANCE (UNLESS OTHERWISE NOTED)
X= ± ——— 0.XX= ± ——— ANGULAR ± ———
0.X= ± ——— 0.XXX= ± ——— FINISH ± ———

SCALE	NO. SHEETS	DRAWING NO.	SIZE	SHEET NO.
N/A	?	126Y-267912	D	35

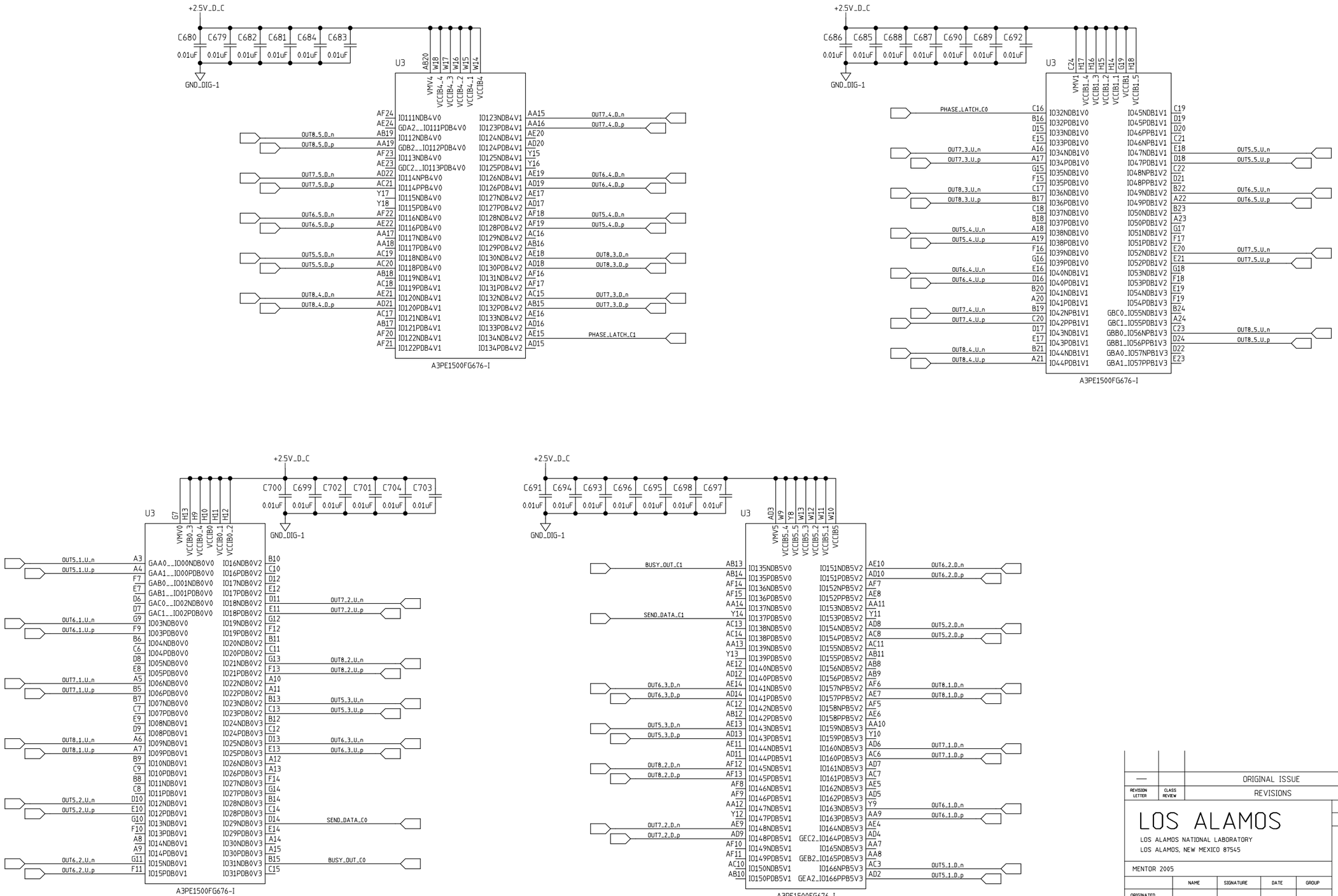

REVISION LETTER	CLASS REVIEW	REVISIONS	DATE	CHANGE BY	CHECK BY	APPROVED BY
—		ORIGINAL ISSUE	—	—	—	—

LOS ALAMOS

LOS ALAMOS NATIONAL LABORATORY
LOS ALAMOS, NEW MEXICO 87545

MENTOR 2005

	NAME	SIGNATURE	DATE	GROUP
ORIGINATED				
DESIGNED				
DRAWN	S. CHACON	S. CHACON	JUNE 2008	AOT-IC
CHECKED	M. PROKOP	M. PROKOP	JUNE 2008	AOT-RFE
PROJ. ENGR.	M. PROKOP	M. PROKOP	JUNE 2008	AOT-RFE
APPROVED				
RELEASED				

CLASSIFICATION OF: DRAWING: U
PART: U DRAWING: U

TITLE

(P-25)

HEAVY QUARK DETECTOR
DATA AQUISITION SYSTEM

TOLERANCE (UNLESS OTHERWISE NOTED)
X= ± ——— 0.XX= ± ——— ANGULAR ± ———
0.X= ± ——— 0.XXX= ± ——— FINISH ± ———

SCALE	NO. SHEETS	DRAWING NO.	SIZE	SHEET NO.
N/A	?	126Y-267912	D	36

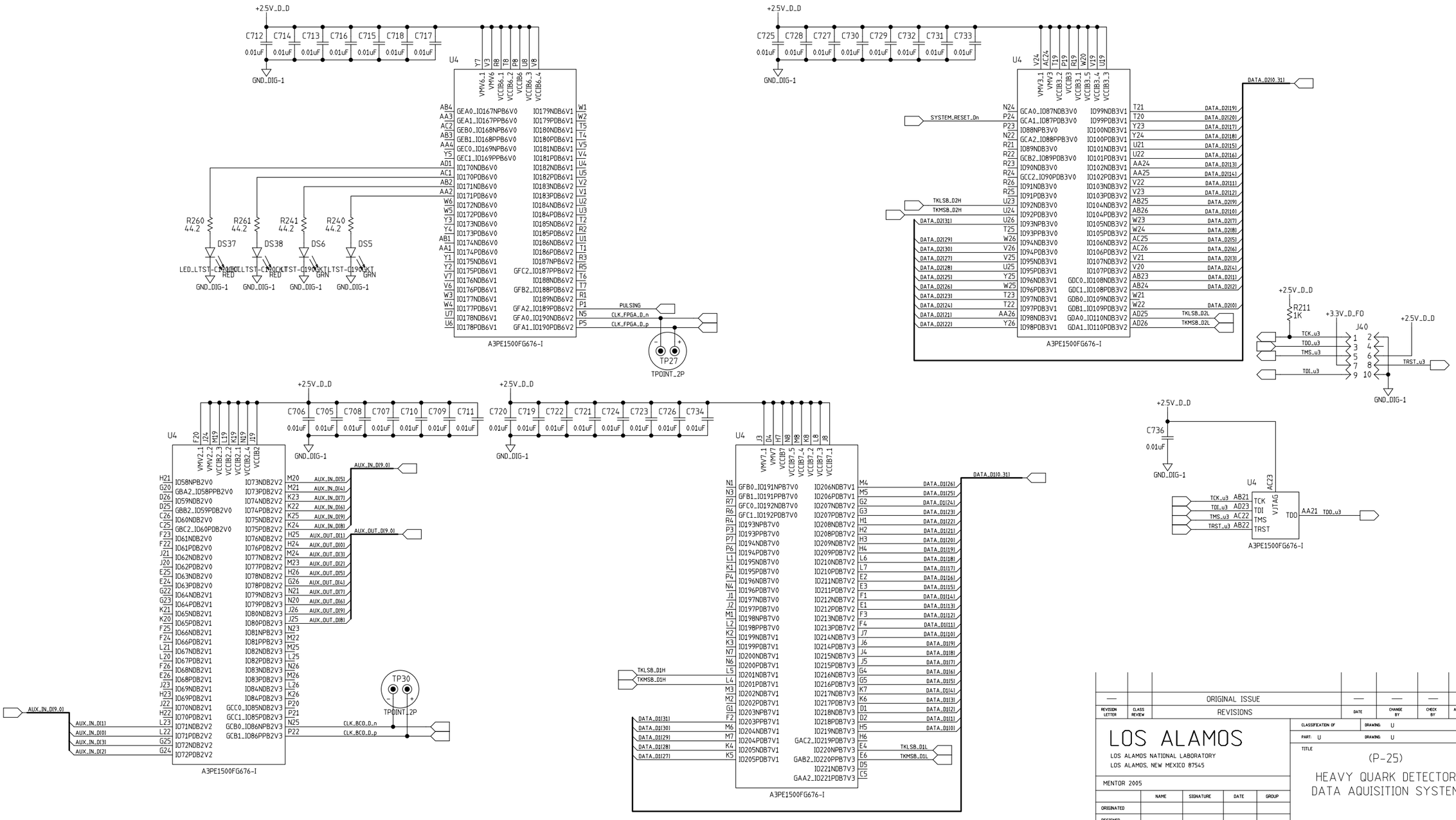

REVISION LETTER	CLASS REVIEW	REVISIONS	DATE	CHANGE BY	CHECK BY	APPROVED BY
—		ORIGINAL ISSUE	—	—	—	—

LOS ALAMOS

LOS ALAMOS NATIONAL LABORATORY
LOS ALAMOS, NEW MEXICO 87545

MENTOR 2005

	NAME	SIGNATURE	DATE	GROUP
ORIGINATED				
DESIGNED				
DRAWN	S. CHACON	S. CHACON	JUNE 2008	AOT-IC
CHECKED	M. PROKOP	M. PROKOP	JUNE 2008	AOT-RFE
PROJ. ENGR.	M. PROKOP	M. PROKOP	JUNE 2008	AOT-RFE
APPROVED				
RELEASED				

CLASSIFICATION OF: DRAWING: U
PART: U DRAWING: U

TITLE

(P-25)

HEAVY QUARK DETECTOR
DATA AQUISITION SYSTEM

TOLERANCE (UNLESS OTHERWISE NOTED)
X= ± ___ 0.XX= ± ___ ANGULAR ± ___
0.X= ± ___ 0.XXX= ± ___ FINISH ± ___

SCALE	NO. SHEETS	DRAWING NO.	SIZE	SHEET NO.
N/A	?	126Y-267912	D	37

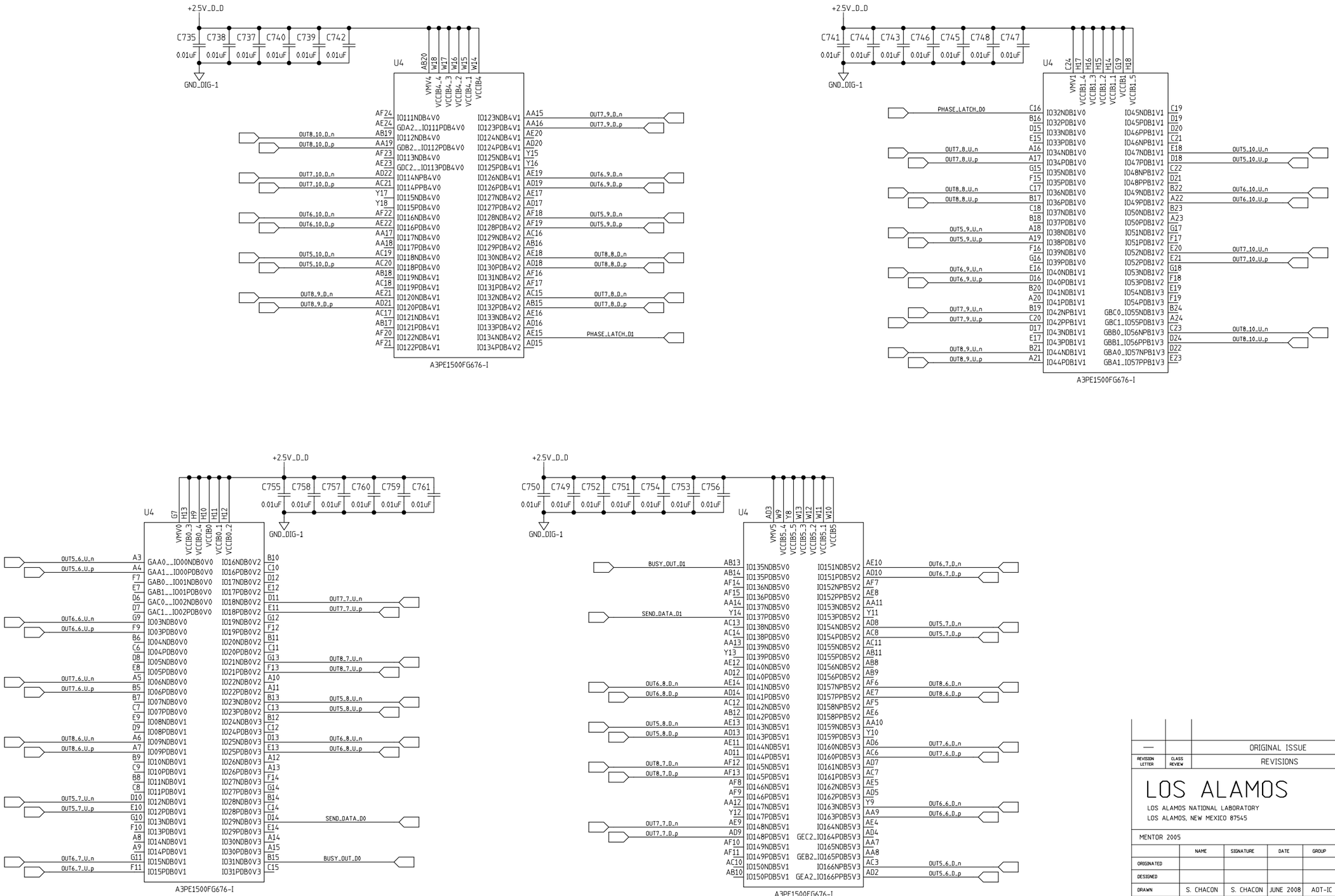

REVISION LETTER	CLASS REVIEW	REVISIONS	DATE	CHANGE BY	CHECK BY	APPROVED BY
—		ORIGINAL ISSUE	—	—	—	—

LOS ALAMOS

LOS ALAMOS NATIONAL LABORATORY
LOS ALAMOS, NEW MEXICO 87545

MENTOR 2005

	NAME	SIGNATURE	DATE	GROUP
ORIGINATED				
DESIGNED				
DRAWN	S. CHACON	S. CHACON	JUNE 2008	AOT-IC
CHECKED	M. PROKOP	M. PROKOP	JUNE 2008	AOT-RFE
PROJ. ENGR.	M. PROKOP	M. PROKOP	JUNE 2008	AOT-RFE
APPROVED				
RELEASED				

CLASSIFICATION OF | DRAWING: U
PART: U | DRAWING: U

TITLE

(P-25)

HEAVY QUARK DETECTOR
DATA AQUISITION SYSTEM

TOLERANCE (UNLESS OTHERWISE NOTED)
X= ± ——— 0.XX= ± ——— ANGULAR ± ———
0.X= ± ——— 0.XXX= ± ——— FINISH ± ———

SCALE	NO. SHEETS	DRAWING NO.	SIZE	SHEET NO.
N/A	?	126Y-267912	D	38

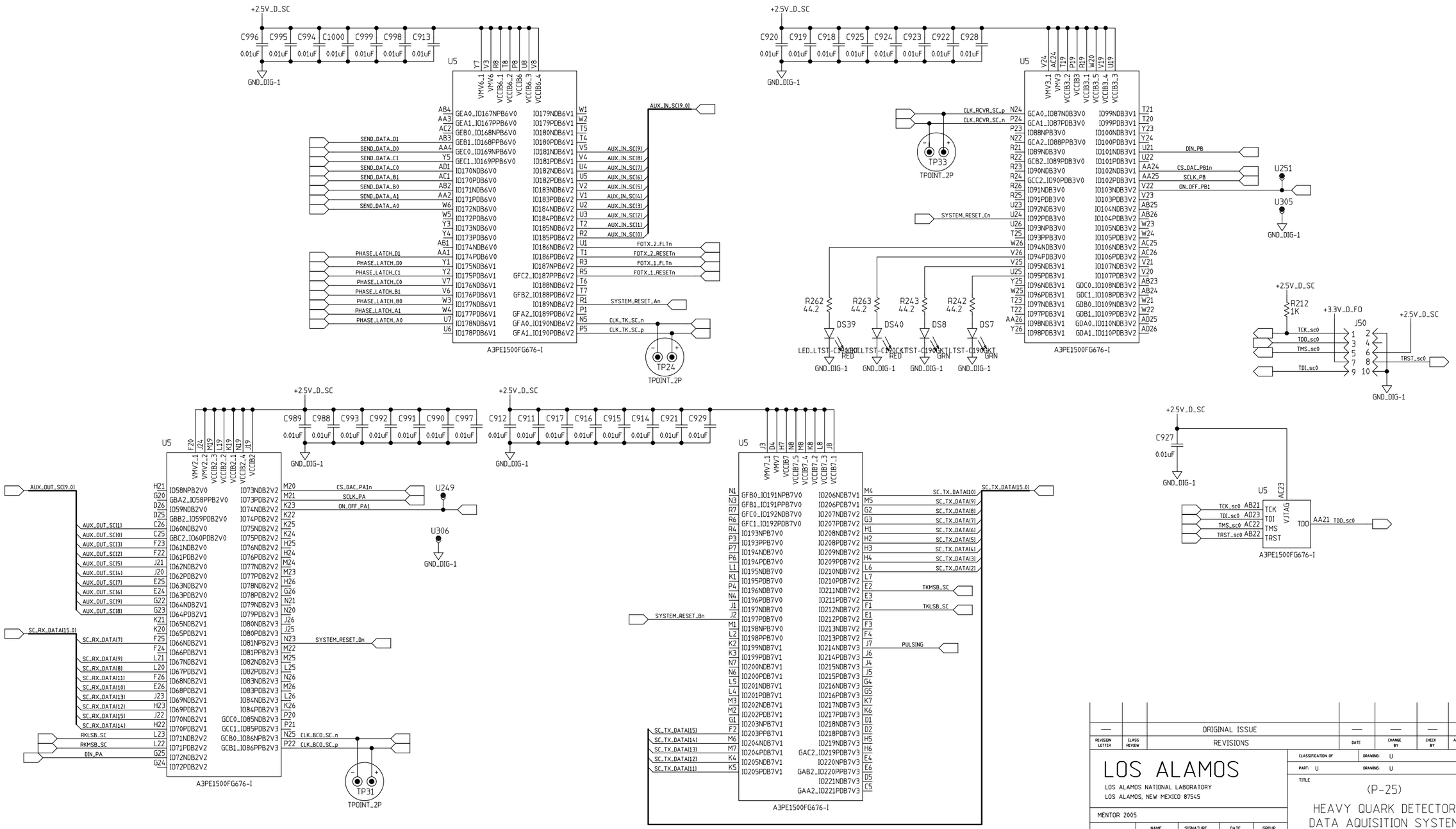

REVISION LETTER	CLASS REVIEW	REVISIONS	DATE	CHANGE BY	CHECK BY	APPROVED BY
—		ORIGINAL ISSUE	—	—	—	—

LOS ALAMOS

LOS ALAMOS NATIONAL LABORATORY
LOS ALAMOS, NEW MEXICO 87545

MENTOR 2005

	NAME	SIGNATURE	DATE	GROUP
ORIGINATED				
DESIGNED				
DRAWN	S. CHACON	S. CHACON	JUNE 2008	AOT-IC
CHECKED	M. PROKOP	M. PROKOP	JUNE 2008	AOT-RFE
PROJ. ENGR.	M. PROKOP	M. PROKOP	JUNE 2008	AOT-RFE
APPROVED				
RELEASED				

CLASSIFICATION OF: DRAWING: U
PART: U DRAWING: U

TITLE

(P-25)

HEAVY QUARK DETECTOR
DATA AQUISITION SYSTEM

TOLERANCE (UNLESS OTHERWISE NOTED)
X= ± —— 0.XX= ± —— ANGULAR ± ——
0.X= ± —— 0.XXX= ± —— FINISH ± ——

SCALE	NO. SHEETS	DRAWING NO.	SIZE	SHEET NO.
N/A	?	126Y-267912	D	39

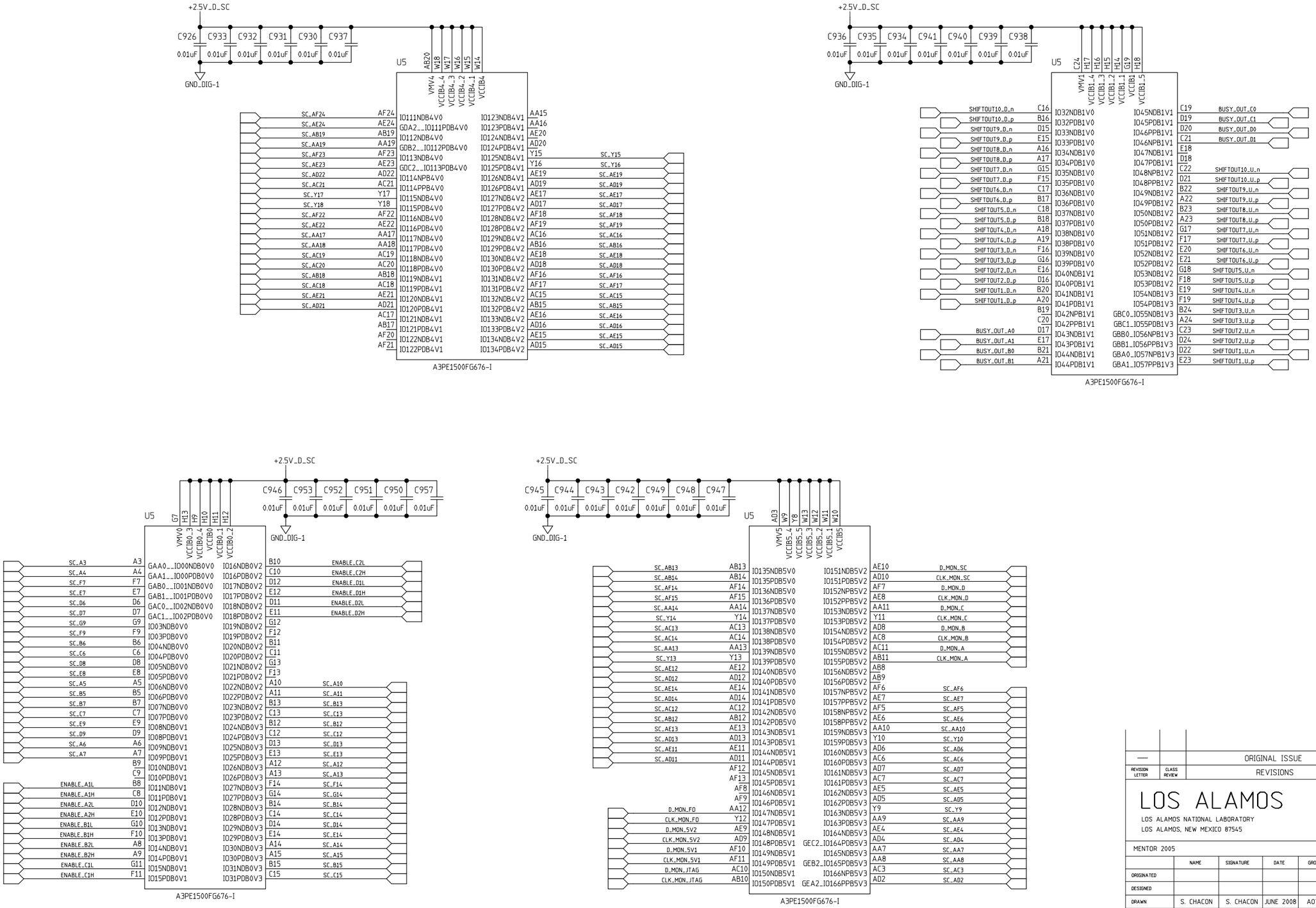

REVISION LETTER	CLASS REVIEW	REVISIONS	DATE	CHANGE BY	CHECK BY	APPROVED BY
—		ORIGINAL ISSUE	—	—	—	—

LOS ALAMOS

LOS ALAMOS NATIONAL LABORATORY
LOS ALAMOS, NEW MEXICO 87545

MENTOR 2005

	NAME	SIGNATURE	DATE	GROUP
ORIGINATED				
DESIGNED				
DRAWN	S. CHACON	S. CHACON	JUNE 2008	AOT-IC
CHECKED	M. PROKOP	M. PROKOP	JUNE 2008	AOT-RFE
PROJ. ENGR.	M. PROKOP	M. PROKOP	JUNE 2008	AOT-RFE
APPROVED				
RELEASED				

CLASSIFICATION OF: DRAWING: U
PART: U DRAWING: U

TITLE

(P-25)

HEAVY QUARK DETECTOR
DATA AQUISITION SYSTEM

TOLERANCE (UNLESS OTHERWISE NOTED)
X= ± — 0.XX= ± — ANGULAR ± —
0.X= ± — 0.XXX= ± — FINISH ± —

SCALE	NO. SHEETS	DRAWING NO.	SIZE	SHEET NO.
N/A	?	126Y-267912	D	40

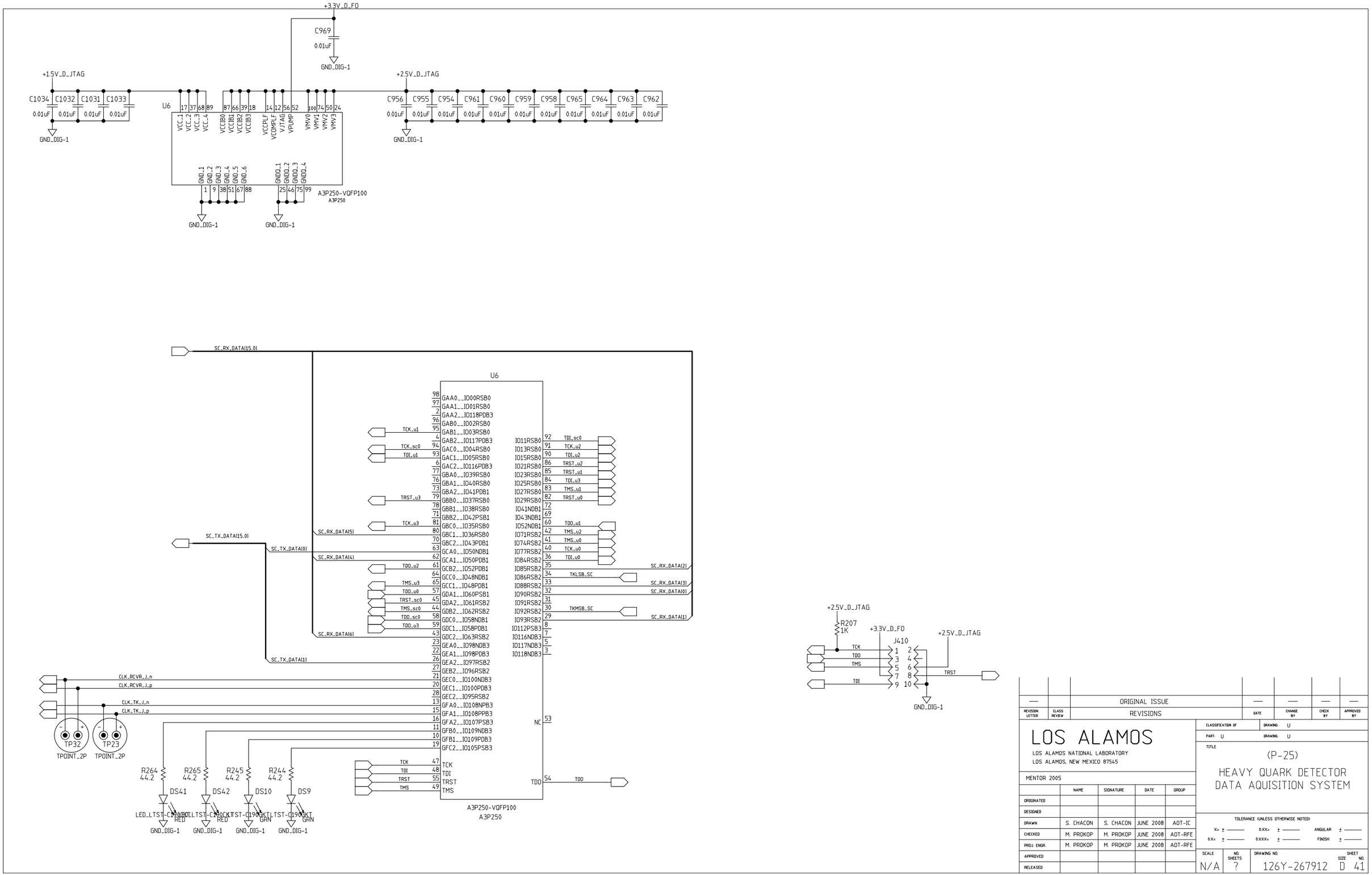

REVISION LETTER	CLASS REVIEW	REVISIONS	DATE	CHANGE BY	CHECK BY	APPROVED BY
—		ORIGINAL ISSUE	—	—	—	—

LOS ALAMOS

LOS ALAMOS NATIONAL LABORATORY
LOS ALAMOS, NEW MEXICO 87545

MENTOR 2005

	NAME	SIGNATURE	DATE	GROUP
ORIGINATED				
DESIGNED				
DRAWN	S. CHACON	S. CHACON	JUNE 2008	AOT-IC
CHECKED	M. PROKOP	M. PROKOP	JUNE 2008	AOT-RFE
PROJ. ENGR.	M. PROKOP	M. PROKOP	JUNE 2008	AOT-RFE
APPROVED				
RELEASED				

CLASSIFICATION OF PART: U DRAWING: U

DRAWING: U

TITLE

(P-25)

HEAVY QUARK DETECTOR DATA AQUISITION SYSTEM

TOLERANCE (UNLESS OTHERWISE NOTED)

X= ± ——— 0.XX= ± ——— ANGULAR ± ———
0.X= ± ——— 0.XXX= ± ——— FINISH ± ———

SCALE	NO. SHEETS	DRAWING NO.	SIZE	SHEET NO.
N/A	?	126Y-267912	D	41

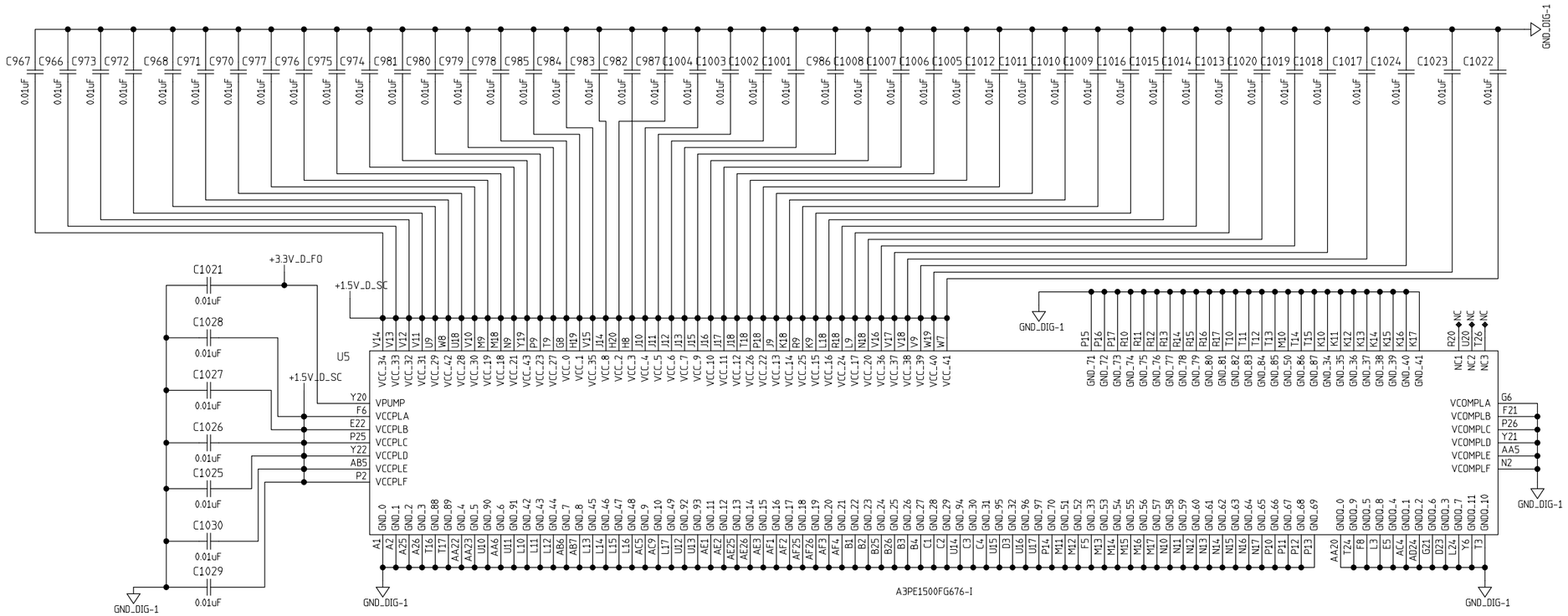

REVISION LETTER	CLASS REVIEW	REVISIONS	DATE	CHANGE BY	CHECK BY	APPROVED BY
—		ORIGINAL ISSUE	—	—	—	—

LOS ALAMOS

LOS ALAMOS NATIONAL LABORATORY
LOS ALAMOS, NEW MEXICO 87545

MENTOR 2005

	NAME	SIGNATURE	DATE	GROUP
ORIGINATED				
DESIGNED				
DRAWN	S. CHACON	S. CHACON	JUNE 2008	AOT-IC
CHECKED	M. PROKOP	M. PROKOP	JUNE 2008	AOT-RFE
PROJ. ENGR.	M. PROKOP	M. PROKOP	JUNE 2008	AOT-RFE
APPROVED				
RELEASED				

CLASSIFICATION OF: DRAWING: U
PART: U DRAWING: U

TITLE
(P-25)
HEAVY QUARK DETECTOR
DATA AQUISITION SYSTEM

TOLERANCE (UNLESS OTHERWISE NOTED)
X± ± ——— 0.XX± ± ——— ANGULAR ± ———
0.X± ± ——— 0.XXX± ± ——— FINISH ± ———

SCALE	NO. SHEETS	DRAWING NO.	SIZE	SHEET NO.
N/A	?	126Y-267912	D	42

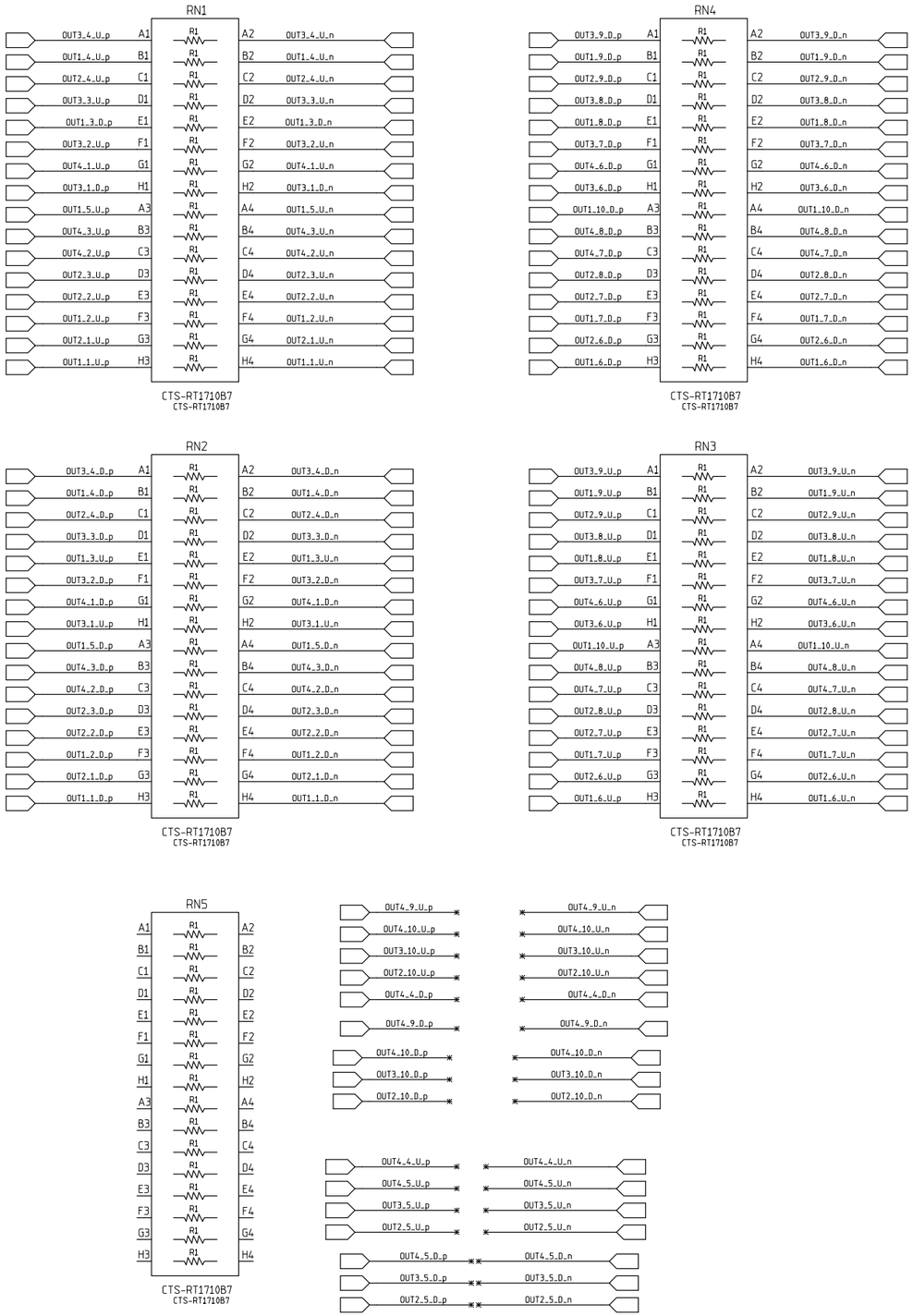

REVISION LETTER	CLASS REVIEW	REVISIONS	DATE	CHANGE BY	CHECK BY	APPROVED BY
—		ORIGINAL ISSUE	—	—	—	—

LOS ALAMOS

LOS ALAMOS NATIONAL LABORATORY
LOS ALAMOS, NEW MEXICO 87545

MENTOR 2005

	NAME	SIGNATURE	DATE	GROUP
ORIGINATED				
DESIGNED				
DRAWN	S. CHACON	S. CHACON	JUNE 2008	AOT-IC
CHECKED	M. PROKOP	M. PROKOP	JUNE 2008	AOT-RFE
PROJ. ENGR.	M. PROKOP	M. PROKOP	JUNE 2008	AOT-RFE
APPROVED				
RELEASED				

CLASSIFICATION OF: DRAWING: U

PART: U DRAWING: U

TITLE

(P-25)

HEAVY QUARK DETECTOR
DATA AQUISITION SYSTEM

TOLERANCE (UNLESS OTHERWISE NOTED)

X= ± ——— 0.XX= ± ——— ANGULAR ± ———
0.X= ± ——— 0.XXX= ± ——— FINISH ± ———

SCALE	NO. SHEETS	DRAWING NO.	SIZE	SHEET NO.
N/A	?	126Y-267912	D	43

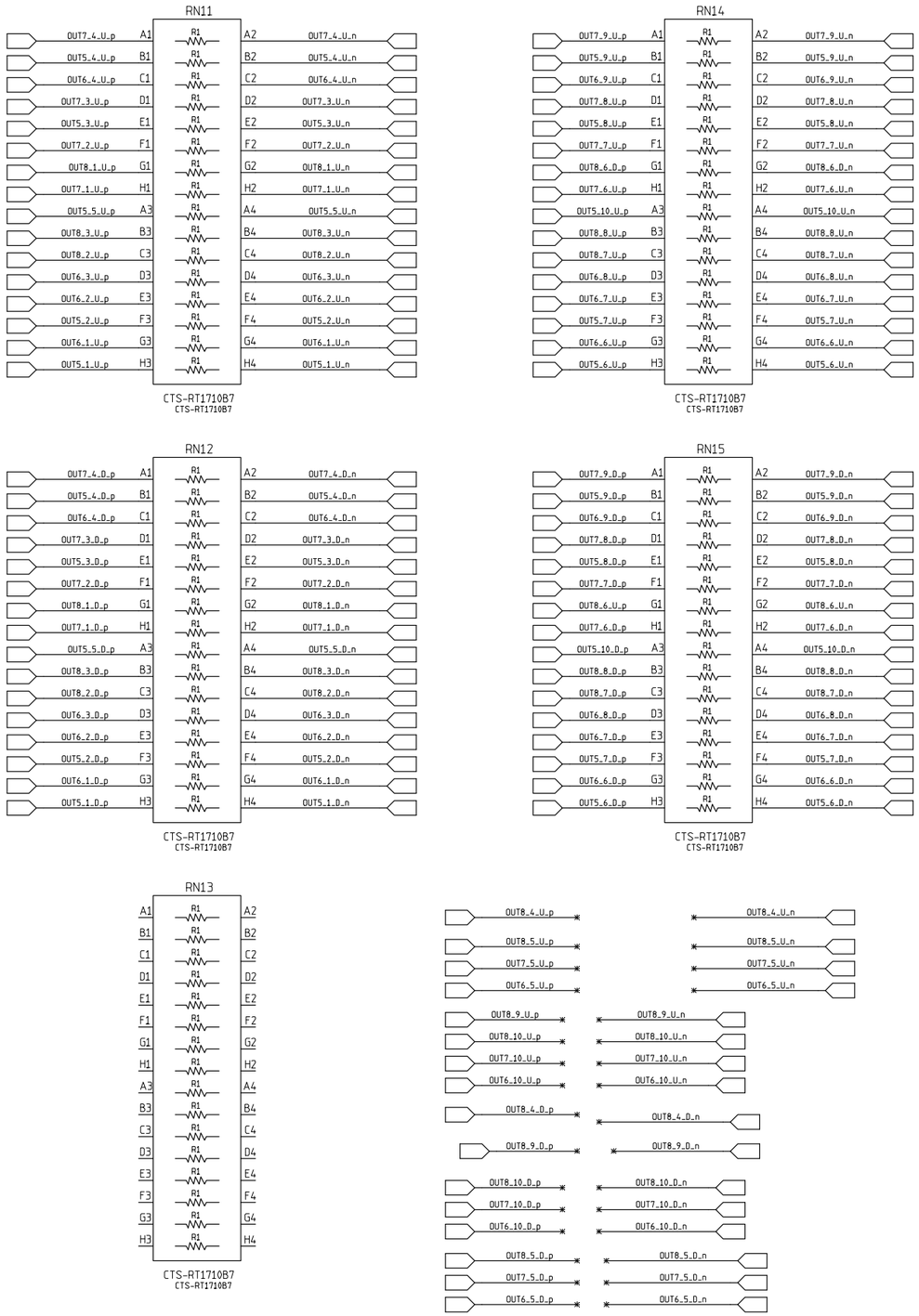

REVISION LETTER	CLASS REVIEW	REVISIONS	DATE	CHANGE BY	CHECK BY	APPROVED BY
—		ORIGINAL ISSUE	—	—	—	—

LOS ALAMOS

LOS ALAMOS NATIONAL LABORATORY
LOS ALAMOS, NEW MEXICO 87545

MENTOR 2005

	NAME	SIGNATURE	DATE	GROUP
ORIGINATED				
DESIGNED				
DRAWN	S. CHACON	S. CHACON	JUNE 2008	AOT-IC
CHECKED	M. PROKOP	M. PROKOP	JUNE 2008	AOT-RFE
PROJ. ENGR.	M. PROKOP	M. PROKOP	JUNE 2008	AOT-RFE
APPROVED				
RELEASED				

CLASSIFICATION OF DRAWING: U

PART: U DRAWING: U

TITLE

(P-25)

HEAVY QUARK DETECTOR
DATA AQUISITION SYSTEM

TOLERANCE (UNLESS OTHERWISE NOTED)

X= ± ——— 0.XX= ± ——— ANGULAR ± ———
0.X= ± ——— 0.XXX= ± ——— FINISH ± ———

SCALE	NO. SHEETS	DRAWING NO.	SIZE	SHEET NO.
N/A	?	126Y-267912	D	44

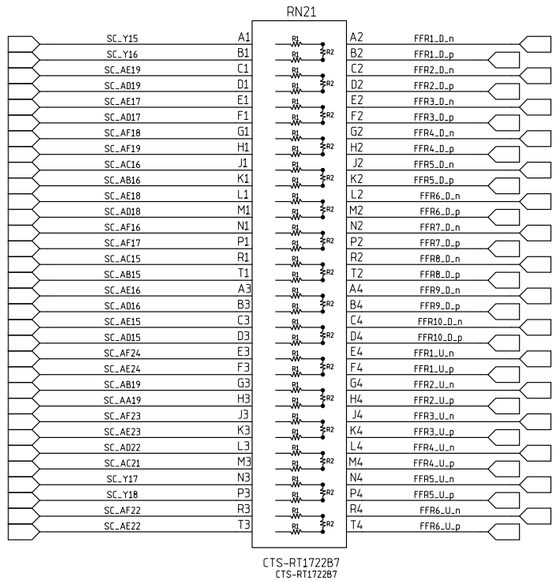

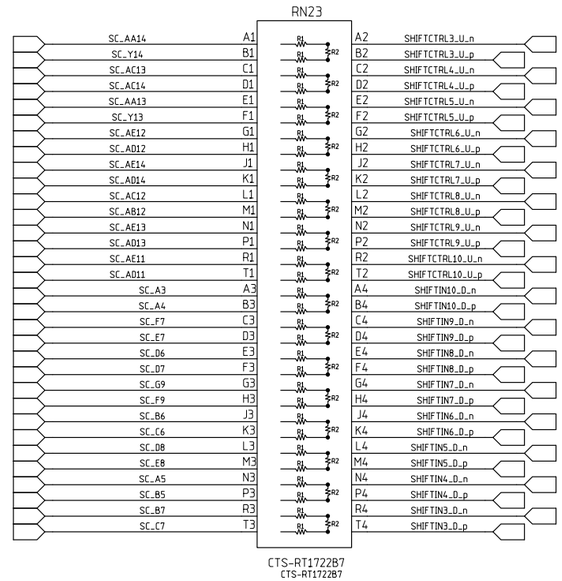

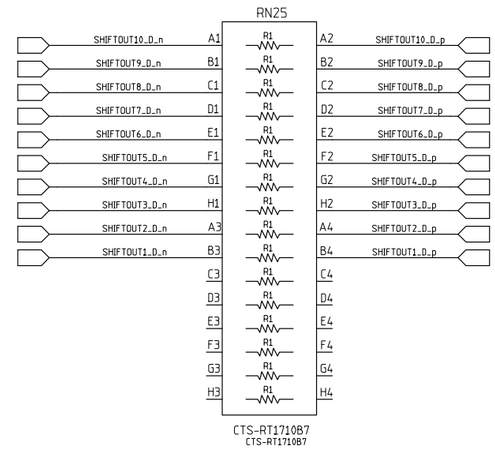

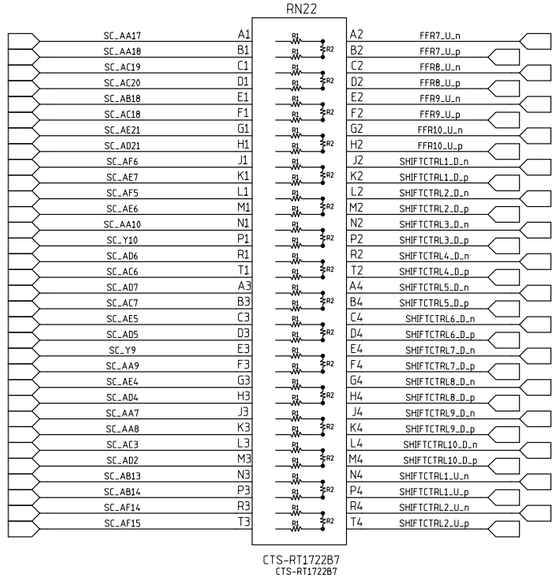

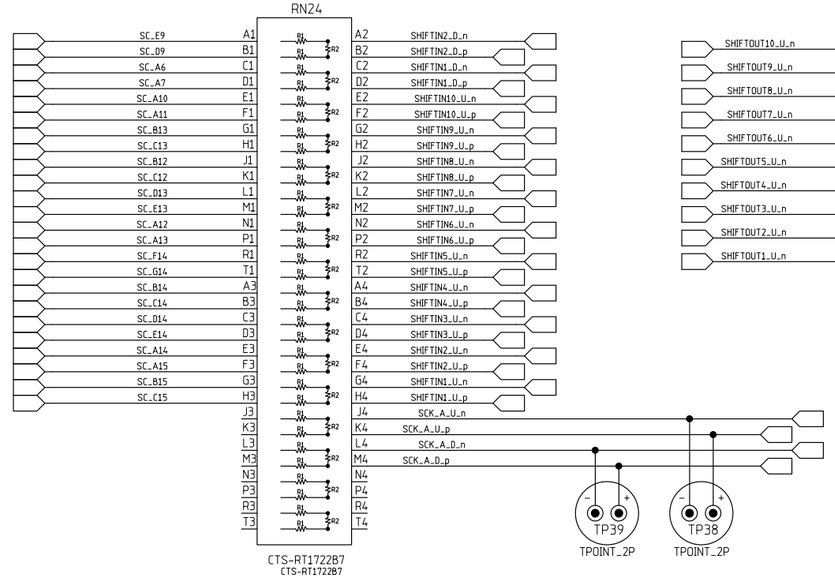

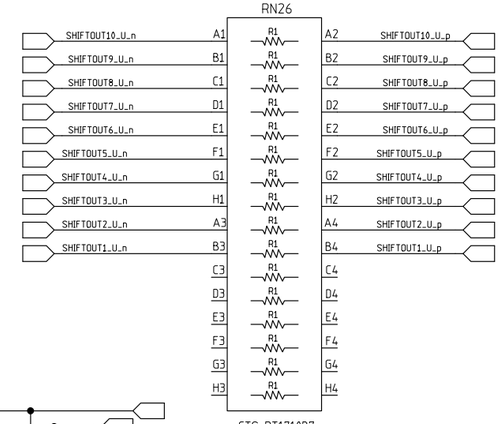

REVISION LETTER	CLASS REVIEW	REVISIONS	DATE	CHANGE BY	CHECK BY	APPROVED BY
—		ORIGINAL ISSUE	—	—	—	—

LOS ALAMOS

LOS ALAMOS NATIONAL LABORATORY
LOS ALAMOS, NEW MEXICO 87545

MENTOR 2005

	NAME	SIGNATURE	DATE	GROUP
ORIGINATED				
DESIGNED				
DRAWN	S. CHACON	S. CHACON	JUNE 2008	AOT-IC
CHECKED	M. PROKOP	M. PROKOP	JUNE 2008	AOT-RFE
PROJ. ENGR.	M. PROKOP	M. PROKOP	JUNE 2008	AOT-RFE
APPROVED				
RELEASED				

CLASSIFICATION OF: DRAWING: U
PART: U DRAWING: U

TITLE

(P-25)

HEAVY QUARK DETECTOR
DATA AQUISITION SYSTEM

TOLERANCE (UNLESS OTHERWISE NOTED)
X= ± ——— 0.XX= ± ——— ANGULAR ± ———
0.X= ± ——— 0.XXX= ± ——— FINISH ± ———

SCALE	NO. SHEETS	DRAWING NO.	SIZE	SHEET NO.
N/A	?	126Y-267912	D	45