REVISIONS						
ZONE	REV	DESCRIPTION	CHANGED BY	DATE	CLASS REVIEW	APPROVED
	A	ORIGINAL ISSUE			NR	
	B	UPDATED: CORRECTED U26, U28 POWER, ADDED COUPLING CAPACITORS ON HFBR5792 DATA LINES, PROVIDED TX_CLK FOR TLK2711S, CHANGED DCM PART FROM TLK2711 TO TLK2501, ADDED 2.5V POWER TO JTAG CONNECTOR, TERMINATED UNUSED PECL VDS OUTPUTS, CHANGED DCM PART FROM TLK2711 TO TLK2501, CHANGED ASSOCIATED SIGNAL NAMES, ADDED ASSOCIATED PARTS, ADDED NOTES REGARDING CLEARED AREA AROUND FPGA (U27), MOVED DIFFERENTIAL CLOCKS FROM BG3/Rm/BG3OUTh AND BG2/Rm/BG1OUTh TO D3/DwD5/D3h AND S0/AS/S0/Rb.	M.STOFFER			

Do not place any parts closer to the FPGA (U27) than 2.5mm.

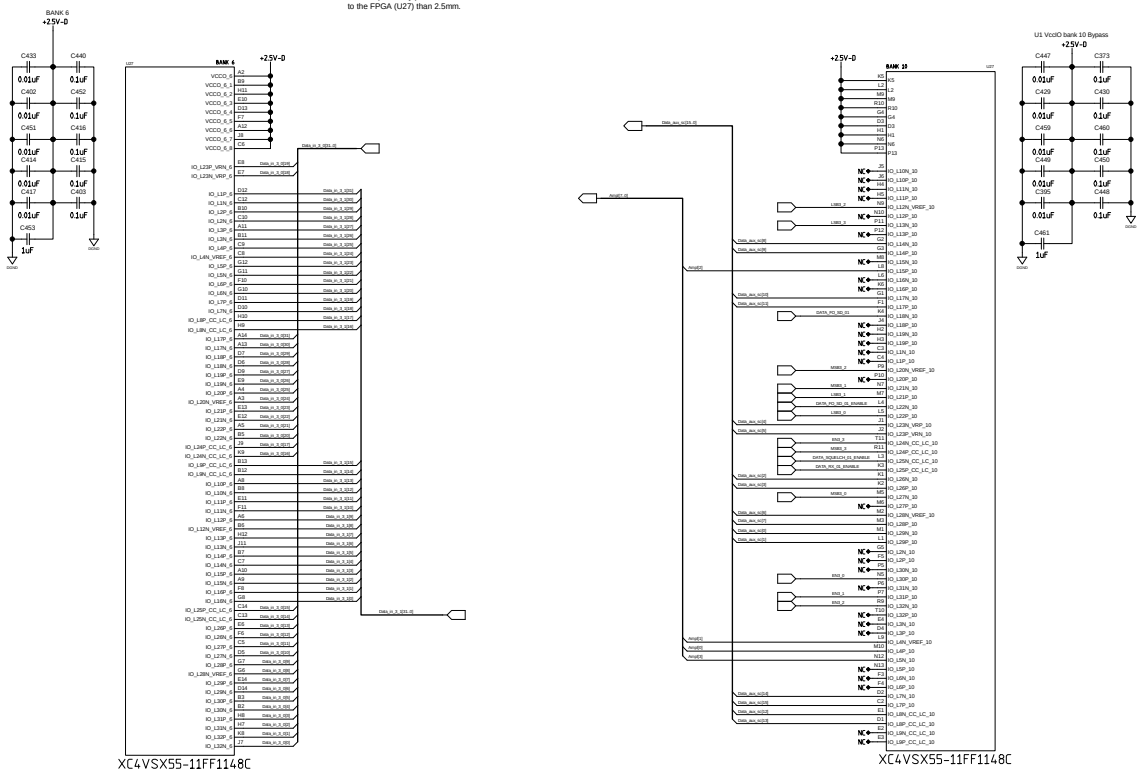

REVISED 4/5/10

QTY REQD	PART OR IDENTIFYING NO.	NOMENCLATURE OR DESCRIPTION	MATERIAL SPECIFICATION	ZONE	NO.

PART LIST/BILL OF MATERIAL

DRAWING LEVEL: UNCLASSIFIED

WG2004

TASK & CONTRACTOR

CAD SYSTEM & VER.

LOS ALAMOS — LOS ALAMOS NATIONAL LABORATORY, LOS ALAMOS, NEW MEXICO 87545

UNLESS OTHERWISE SPECIFIED, DIMENSIONS ARE IN INCHES.
TOLERANCE ANG.
TOLERANCE ANG.
.XX ± .01
.XXX ± .005
ANGULAR ±
MACHINED FINISH ± 125

	APPROVALS	DATE	GROUP
DESIGNED	M. Prokop	05/09	ACIT-RRE
DRAWN	M. Prokop	05/09	ACIT-RRE
CHECKED	M. Prokop	12/10/09	ACIT-RRE
ENGINEERING	M. Prokop	12/10/09	ACIT-RRE
CUSTOMER	M. Prokop	12/10/09	ACIT-RRE
APPROVED	M. Prokop	12/10/09	ACIT-RRE

FILE PATH

NEXT ASSEMBLY | USED ON

APPLICATION

FVTX Front End Module
VME Form Factor

SIZE E | CAGE CODE SCHEMATIC | DRAWING NO. & CAD FILENAME 126Y-267961

SCALE NONE | SHEET 1 OF 19

REVISIONS						
ZONE	REV	DESCRIPTION	CHANGED BY	DATE	CLASS REVIEW	APPROVED
		ORIGINAL ISSUE			NR	

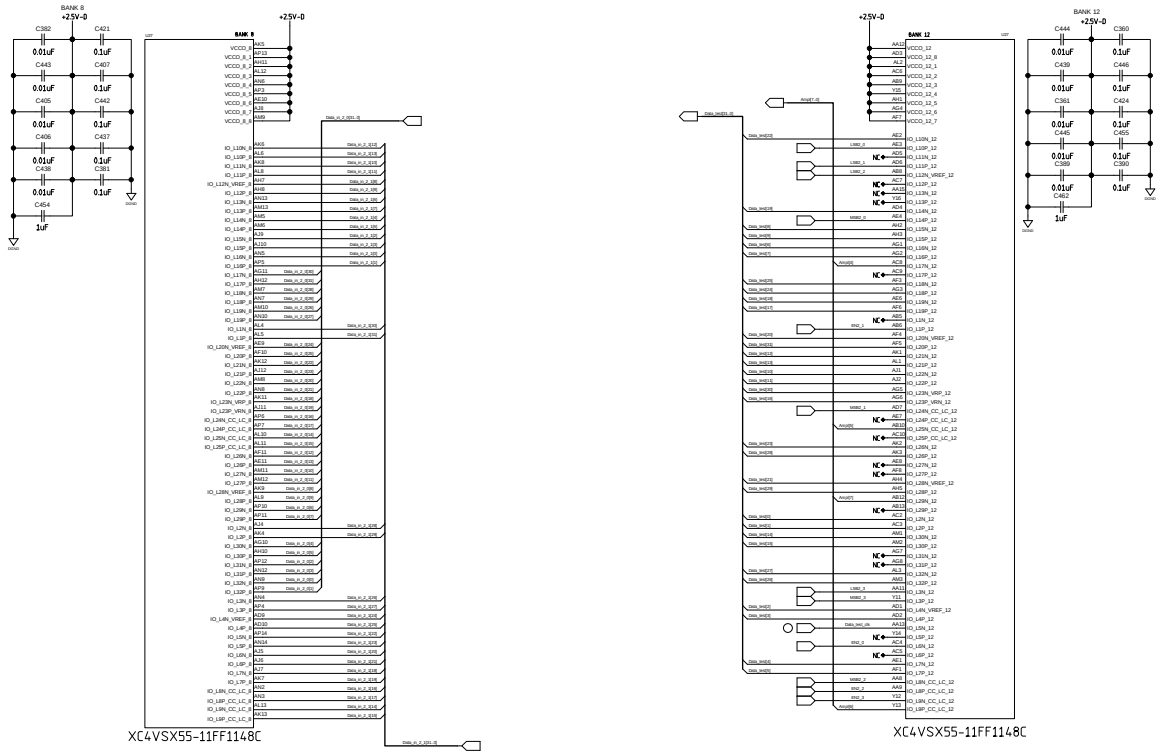

QTY REQD	PART OR IDENTIFYING NO.	NOMENCLATURE OR DESCRIPTION	MATERIAL SPECIFICATION	ZONE	NO.

PART LIST/BILL OF MATERIAL

DRAWING LEVEL: UNCLASSIFIED

TASK & CONTRACTOR: WG2004

CAD SYSTEM & VER.

LOS ALAMOS — LOS ALAMOS NATIONAL LABORATORY, LOS ALAMOS, NEW MEXICO 87545

UNLESS OTHERWISE SPECIFIED: DIMENSIONS ARE IN INCHES.
TOLERANCE ARE:
TOLERANCE ARE: .X ± .1, .XX ± .01, .XXX ± .005
ANGULAR ± MACHINED FINISH ± 125

	APPROVALS	DATE	GROUP
DESIGNED	M. Prokop	05/09	ACT-RFE
DRAWN	M. Prokop	05/09	ACT-RFE
CHECKED	M. Prokop	12/10/09	ACT-RFE
ENGINEERING	M. Prokop	12/10/09	ACT-RFE
CUSTOMER	M. Prokop	12/10/09	ACT-RFE
APPROVED	M. Prokop	12/10/09	ACT-RFE
FILE PATH			

FVTX Front End Module
VME Form Factor

SIZE	CAGE CODE	DRAWING NO. & CAD FILENAME
E	SCHEMATIC	126Y-267961

SCALE: NONE — SHEET 2 OF 19

NEXT ASSEMBLY | USED ON
APPLICATION

RELEASE DATE 12/10/09

REVISIONS						
ZONE	REV	DESCRIPTION	CHANGED BY	DATE	CLASS REVIEW	APPROVED
		ORIGINAL ISSUE			NR	

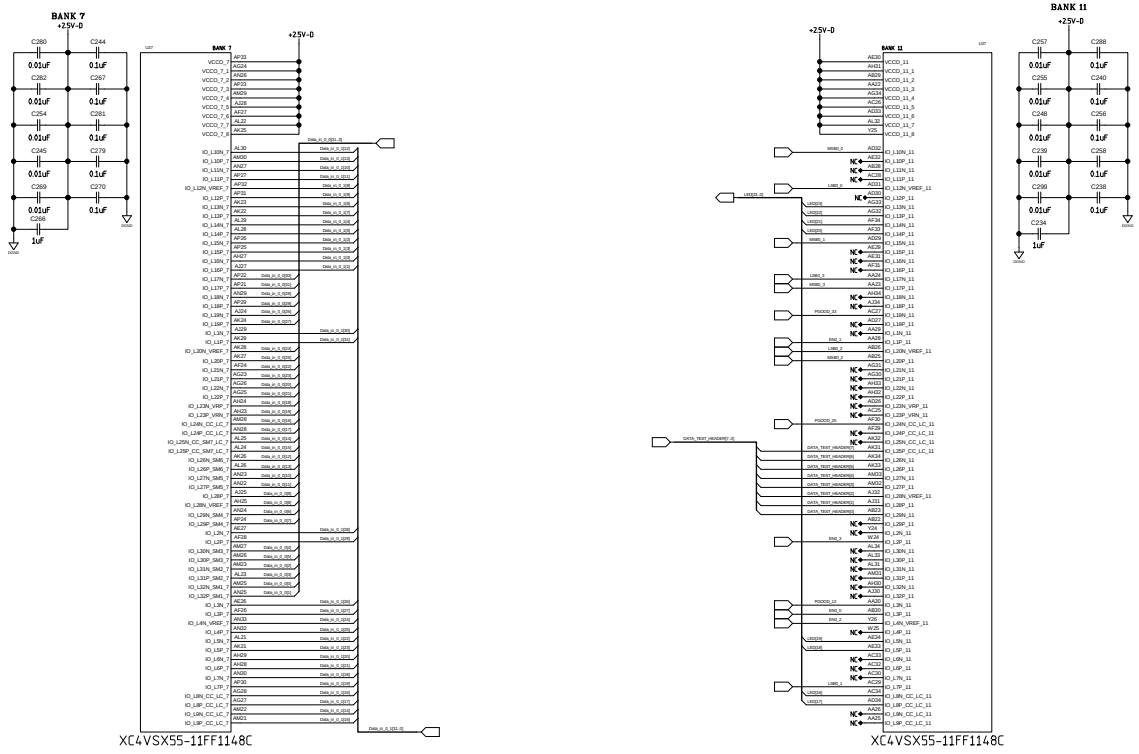

QTY REQD	PART OR IDENTIFYING NO.	NOMENCLATURE OR DESCRIPTION	MATERIAL SPECIFICATION	ZONE	NO.

PART LIST/BILL OF MATERIAL

DRAWING LEVEL

UNCLASSIFIED

TASK & CONTRACTOR: WG2004

CAD SYSTEM & VER.

LOS ALAMOS — LOS ALAMOS NATIONAL LABORATORY, LOS ALAMOS, NEW MEXICO 87545

UNLESS OTHERWISE SPECIFIED: DIMENSIONS ARE IN INCHES.
TOLERANCE ARE:
TOLERANCE ARE:
X= ± 1/8
XX= ± 1/16
XXX= ± .005
ANGULAR ±
MACHINED FINISH ± 125

	APPROVALS	DATE	GROUP
DESIGNED	M. Prokop	05/09	ACT-RFE
DRAWN	M. Prokop	05/09	ACT-RFE
CHECKED	M. Prokop	12/10/09	ACT-RFE
ENGINEERING	M. Prokop	12/10/09	ACT-RFE
CUSTOMER	M. Prokop	12/10/09	ACT-RFE
APPROVED	M. Prokop	12/10/09	ACT-RFE
FILE PATH			

FVTX Front End Module
VME Form Factor

SIZE	CAGE CODE	DRAWING NO. & CAD FILENAME
E	SCHEMATIC	126Y-267961

SCALE: NONE — SHEET 3 OF 19

NEXT ASSEMBLY — USED ON

APPLICATION

RELEASE DATE 12/10/09

REVISIONS						
ZONE	REV	DESCRIPTION	CHANGED BY	DATE	CLASS REVIEW	APPROVED
	A	ORIGINAL ISSUE			NR	
	B	UPDATED: CHANGED DCM PART FROM TLK2711 TO TLK2501, CHANGED ASSOCIATED SIGNAL NAMES, ADDED NOTES REGARDING CLEARED AREA AROUND FPGA (U27)	M STOFFER			

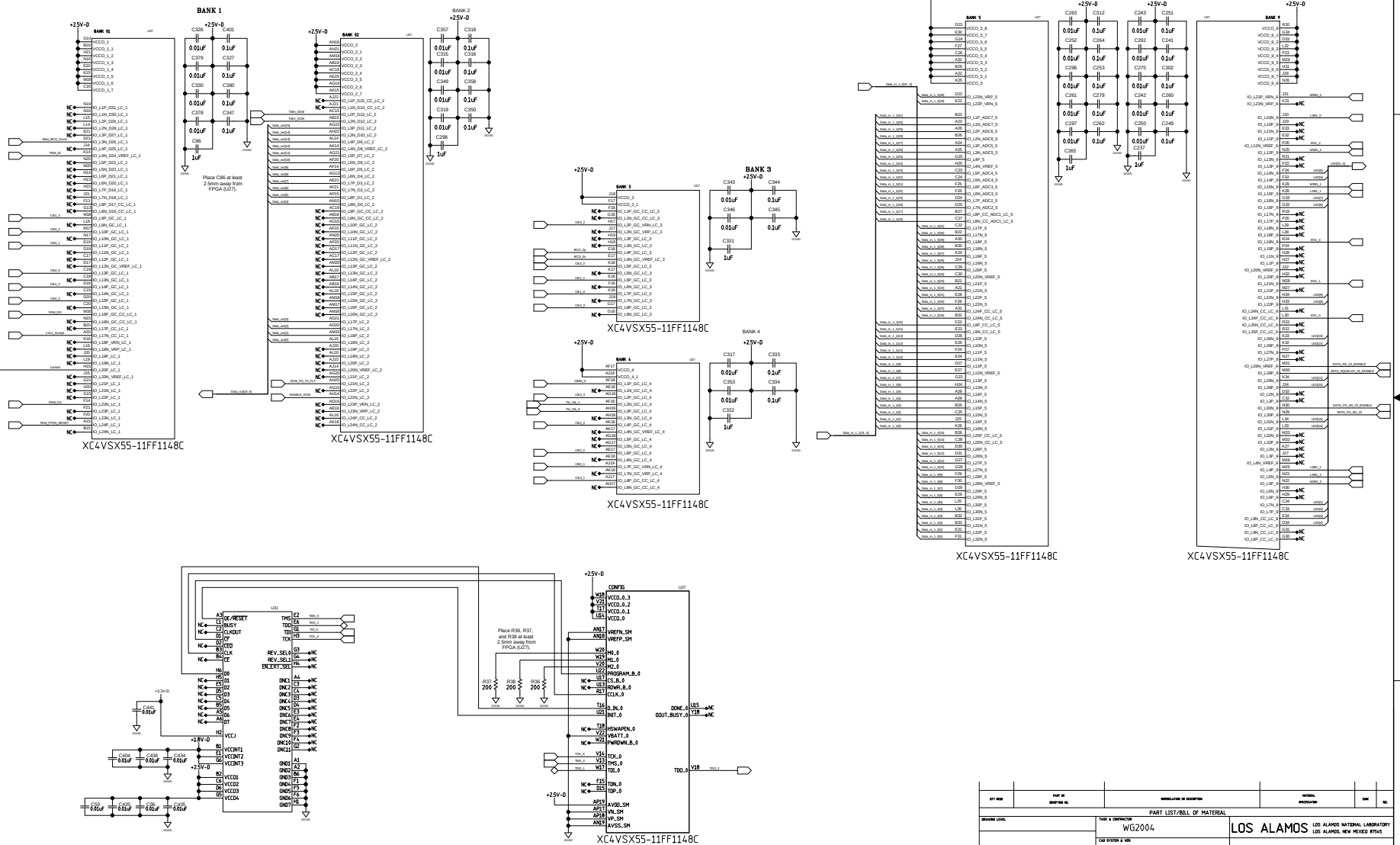

REVISED 3/17/10

QTY REQD	PART OR IDENTIFYING NO.	NOMENCLATURE OR DESCRIPTION	MATERIAL SPECIFICATION	ZONE	NO.

PART LIST/BILL OF MATERIAL

DRAWING LEVEL: UNCLASSIFIED

TASK & CONTRACTOR: WG2004

CAD SYSTEM & VER.

LOS ALAMOS — LOS ALAMOS NATIONAL LABORATORY, LOS ALAMOS, NEW MEXICO 87545

UNLESS OTHERWISE SPECIFIED: DIMENSIONS ARE IN INCHES.
TOLERANCE ARE:
TOLERANCE ARE:
ANGULAR ±
MACHINED FINISH ± 125

	APPROVALS	DATE	GROUP
DESIGNED	M. Prokop	05/09	ACT-RFE
DRAWN	M. Prokop	05/09	ACT-RFE
CHECKED	M. Prokop	12/10/09	ACT-RFE
ENGINEERING	M. Prokop	12/10/09	ACT-RFE
CUSTOMER	M. Prokop	12/10/09	ACT-RFE
APPROVED	M. Prokop	12/10/09	ACT-RFE

FILE PATH

FVTX Front End Module
VME Form Factor

SIZE	CAGE CODE	DRAWING NO. & CAD FILENAME
E	SCHEMATIC	126Y-267961

SCALE: NONE — SHEET 4 OF 19

NEXT ASSEMBLY | USED ON
APPLICATION

REVISIONS						
ZONE	REV	DESCRIPTION	CHANGED BY	DATE	CLASS REVIEW	APPROVED
		ORIGINAL ISSUE			NR	
	B	UPDATED: ADDED NOTE REGARDING CLEARED AREA AROUND FPGA (U27)	M STOFFER			

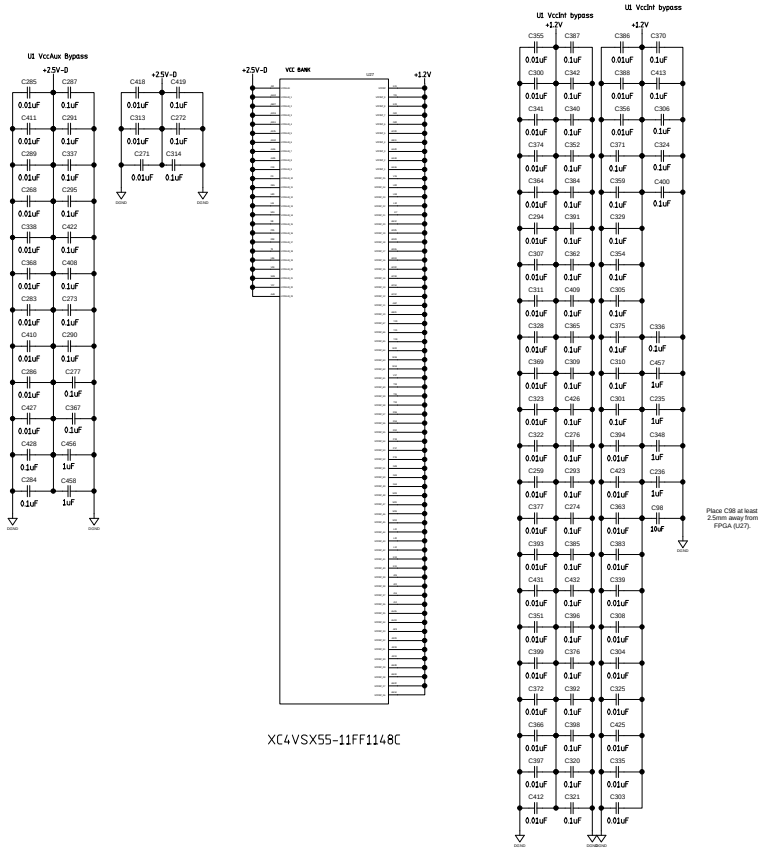

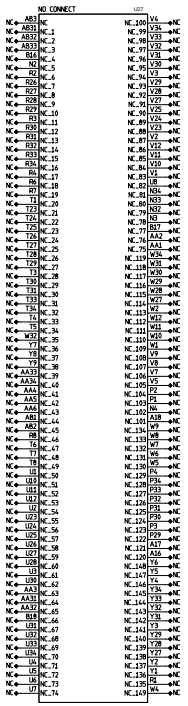

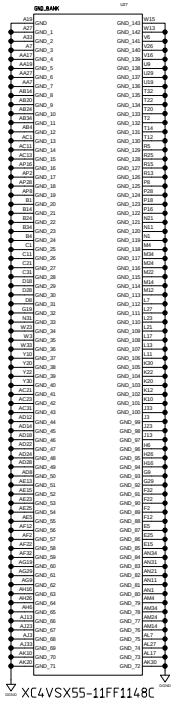

QTY REQD	PART OR IDENTIFYING NO.	NOMENCLATURE OR DESCRIPTION	MATERIAL SPECIFICATION	ZONE	NO.

PART LIST/BILL OF MATERIAL

DRAWING LEVEL: UNCLASSIFIED

TASK & CONTRACTOR: WG2004

CAD SYSTEM & VER.

LOS ALAMOS — LOS ALAMOS NATIONAL LABORATORY, LOS ALAMOS, NEW MEXICO 87545

UNLESS OTHERWISE SPECIFIED: DIMENSIONS ARE IN INCHES. TOLERANCE ANG: ±0°0'30" TOLERANCE ANG: .XX ±.01 .XXX ±.005 ANGULAR MACHINED FINISH ± 125

	APPROVALS	DATE	GROUP
DESIGNED	M. Prokop	05/09	ACIT-RPE
DRAWN	M. Prokop	05/09	ACIT-RPE
CHECKED	M. Prokop	12/10/09	ACIT-RPE
ENGINEERING	M. Prokop	12/10/09	ACIT-RPE
CUSTOMER	M. Prokop	12/10/09	ACIT-RPE
APPROVED	M. Prokop	12/10/09	ACIT-RPE

FVTX Front End Module
VME Form Factor

NEXT ASSEMBLY | USED ON | APPLICATION | FILE PATH

SIZE: E | CAGE CODE: SCHEMATIC | DRAWING NO. & CAD FILENAME: 126Y-267961

SCALE: NONE | SHEET 5 OF 19

REVISED 4/1/10

DWG. NO.	SH.	REV

REVISIONS

REV	DESCRIPTION	DATE	APPROVED
B	UPDATED: CHANGED XCF02S VCCJ AND VCCO TO 2.5V		

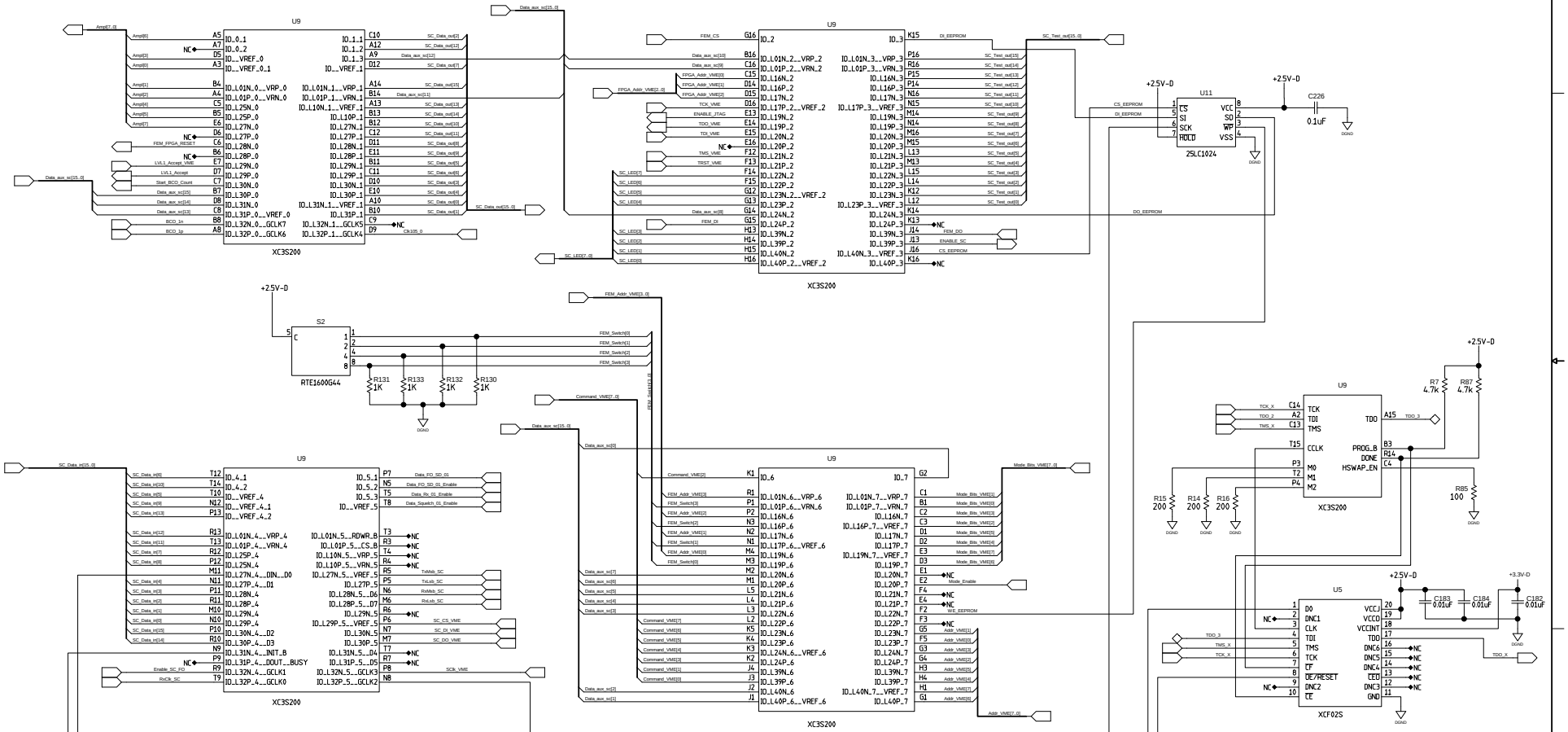

REVISED 3/23/10

CONTRACT NO.		
APPROVALS		DATE
DRAWN	M. Prokop	12/10/09
CHECKED	M. Prokop	12/10/09
ISSUED	M. Prokop	12/10/09

FVTX Front End Module
VME Form Factor

SIZE	FSCM NO.	DWG. NO.	REV
D		126Y-267961	
SCALE		SHEET 6 of 19	

H=BND: V=4LA

DWG. NO.	SH.	REV

REVISIONS

REV	DESCRIPTION	DATE	APPROVED
B	UPDATED: CHANGED DCM PART FROM TLK2711 TO TLK2501, ADDED ASSOCIATED PARTS AND SIGNAL NAMES		

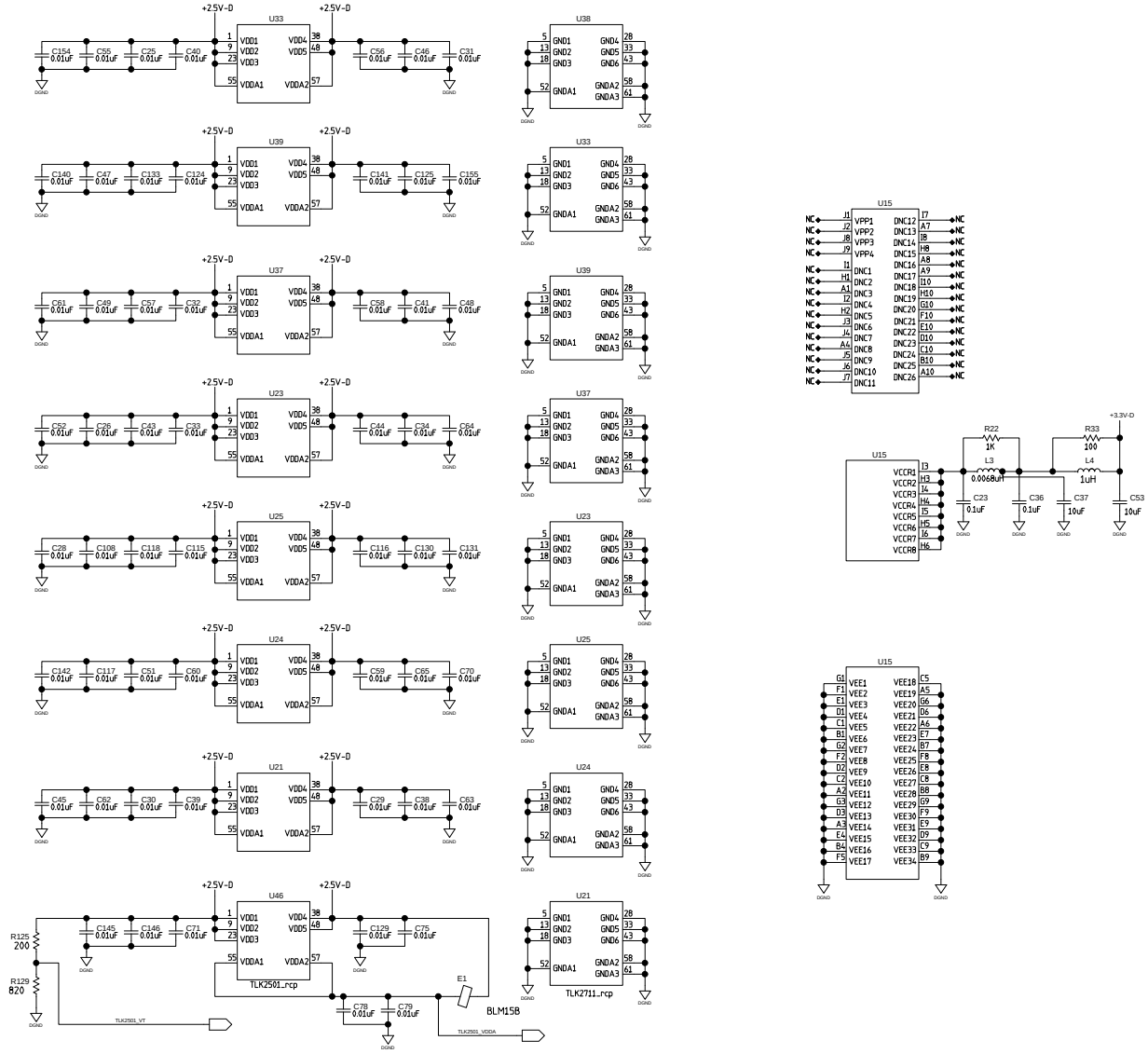

REVISED 3/17/10

CONTRACT NO.		
APPROVALS		DATE
DRAWN	M. Prokop	12/10/09
CHECKED	M. Prokop	12/10/09
ISSUED	M. Prokop	12/10/09

FVTX Front End Module
VME Form Factor

SIZE	FSCM NO.	DWG. NO.	REV
D		126Y-267961	B
SCALE		SHEET 7 of 19	

H=BND: V=4LA

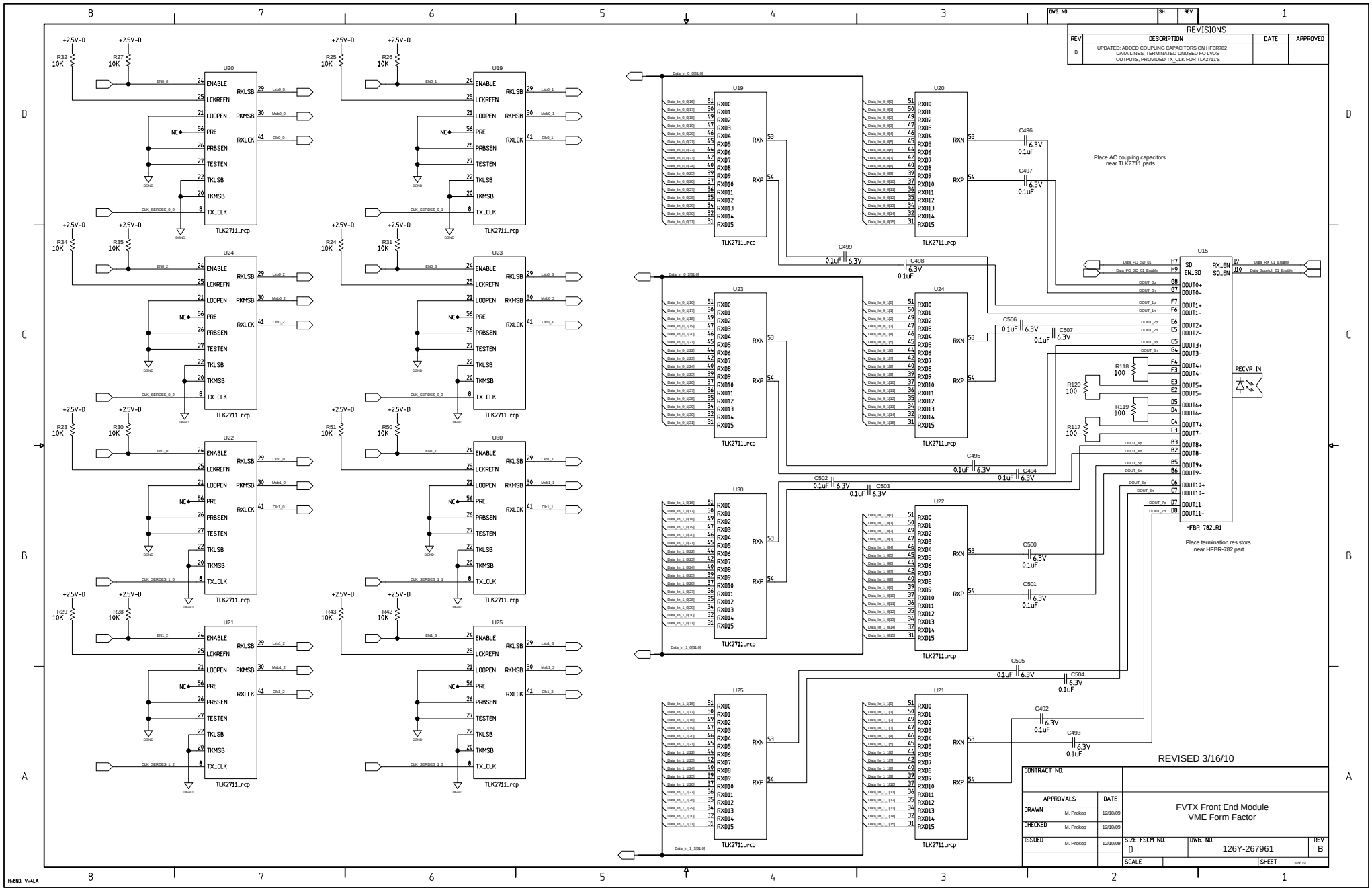
DWG. NO.
SH.
REV
REVISIONS
REV
DESCRIPTION
DATE
APPROVED
B
UPDATED: ADDED COUPLING CAPACITORS ON HFBR782 DATA LINES, TERMINATED UNUSED FO LVDS OUTPUTS, PROVIDED TX_CLK FOR TLK2711'S
U20
U19
U24
U23
U22
U30
U21
U25
U15
TLK2711_rcp
HFBR-782_R1
Place AC coupling capacitors near TLK2711 parts.
Place termination resistors near HFBR-782 part.
RECVR IN
REVISED 3/16/10
CONTRACT NO.
APPROVALS
DATE
DRAWN
M. Prokop
12/10/09
CHECKED
M. Prokop
12/10/09
ISSUED
M. Prokop
12/10/09
FVTX Front End Module
VME Form Factor
SIZE
FSCM NO.
DWG. NO.
126Y-267961
REV
B
D
SCALE
SHEET
8 of 19

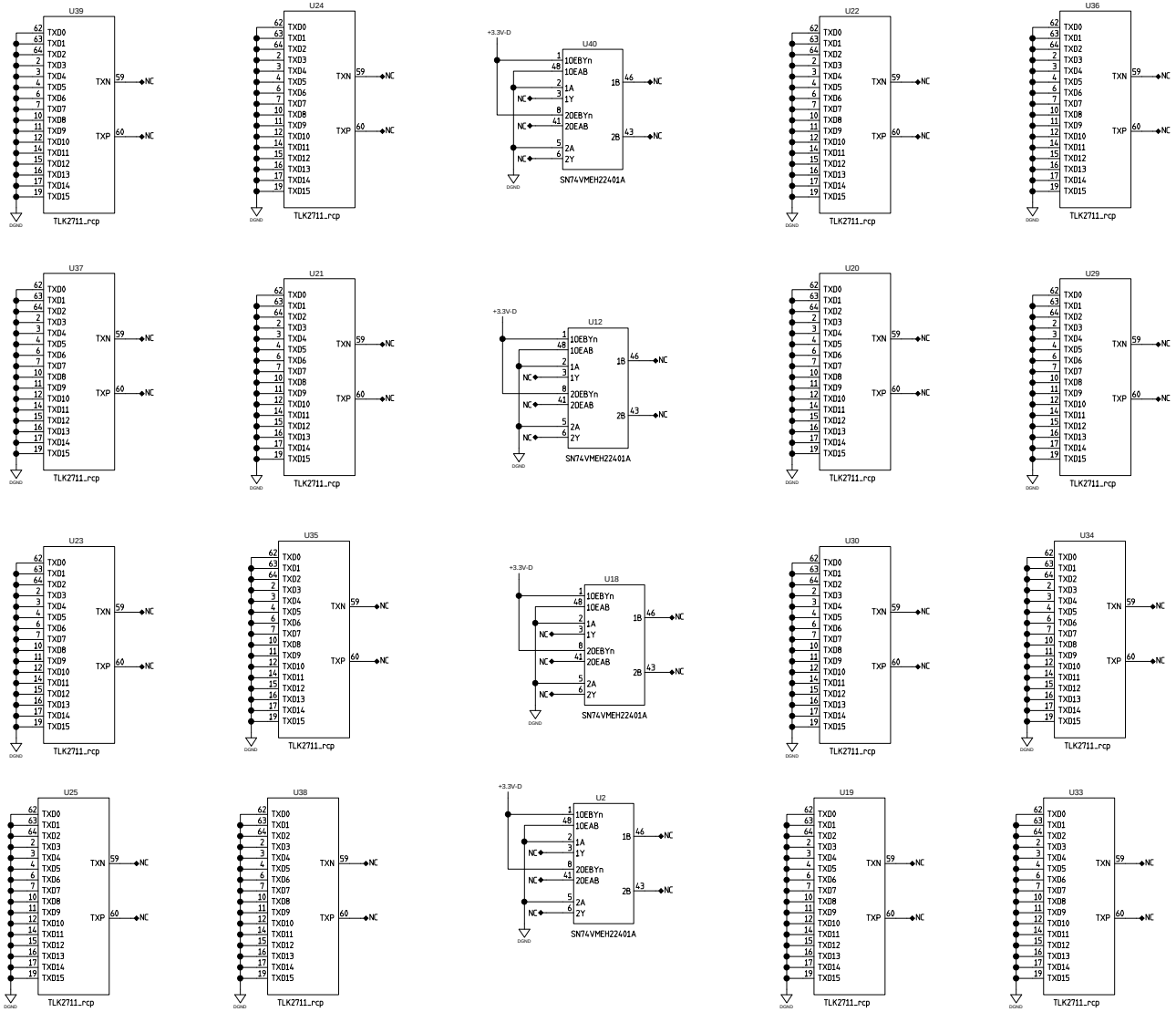

DWG. NO.	SH.	REV

REVISIONS

REV	DESCRIPTION	DATE	APPROVED

RELEASE DATE 12/10/09

CONTRACT NO.		
APPROVALS		DATE
DRAWN	M. Prokop	12/10/09
CHECKED	M. Prokop	12/10/09
ISSUED	M. Prokop	12/10/09

FVTX Front End Module
VME Form Factor

SIZE	FSCM NO.	DWG. NO.	REV
D		126Y-267961	
SCALE		SHEET 9 of 19	

H=BND: V=4LA

DWG. NO.	SH.	REV

REVISIONS

REV	DESCRIPTION	DATE	APPROVED
B	UPDATED: CHANGED DCM PART FROM TLK2711 TO TLK2501 (U46)		

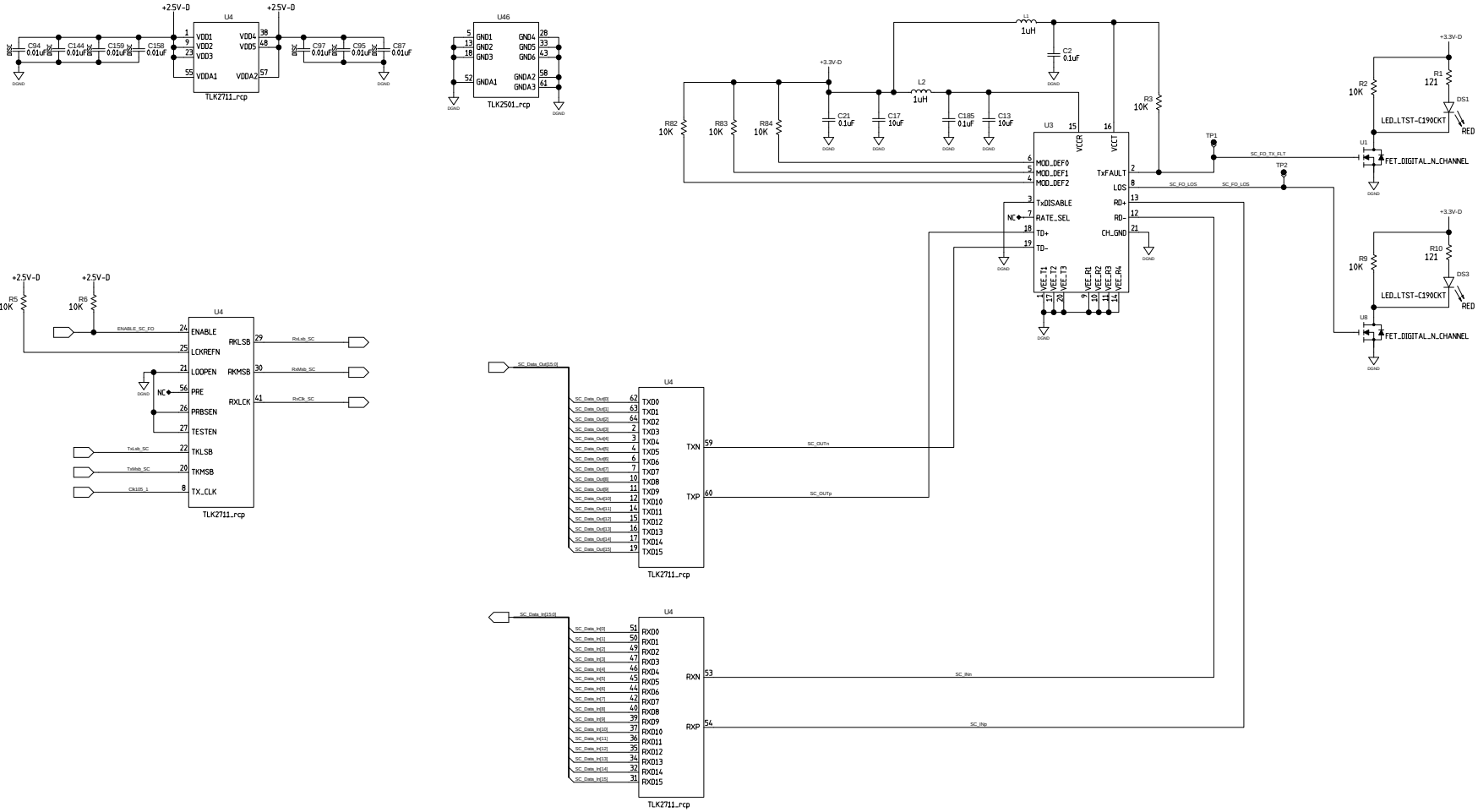

REVISED 3/17/10

CONTRACT NO.		
APPROVALS		DATE
DRAWN	M. Prokop	12/10/09
CHECKED	M. Prokop	12/10/09
ISSUED	M. Prokop	12/10/09

FVTX Front End Module
VME Form Factor

SIZE	FSCM NO.	DWG. NO.	REV
D		126Y-267961	B

SCALE | SHEET 10 of 19

H=BND; V=4LA

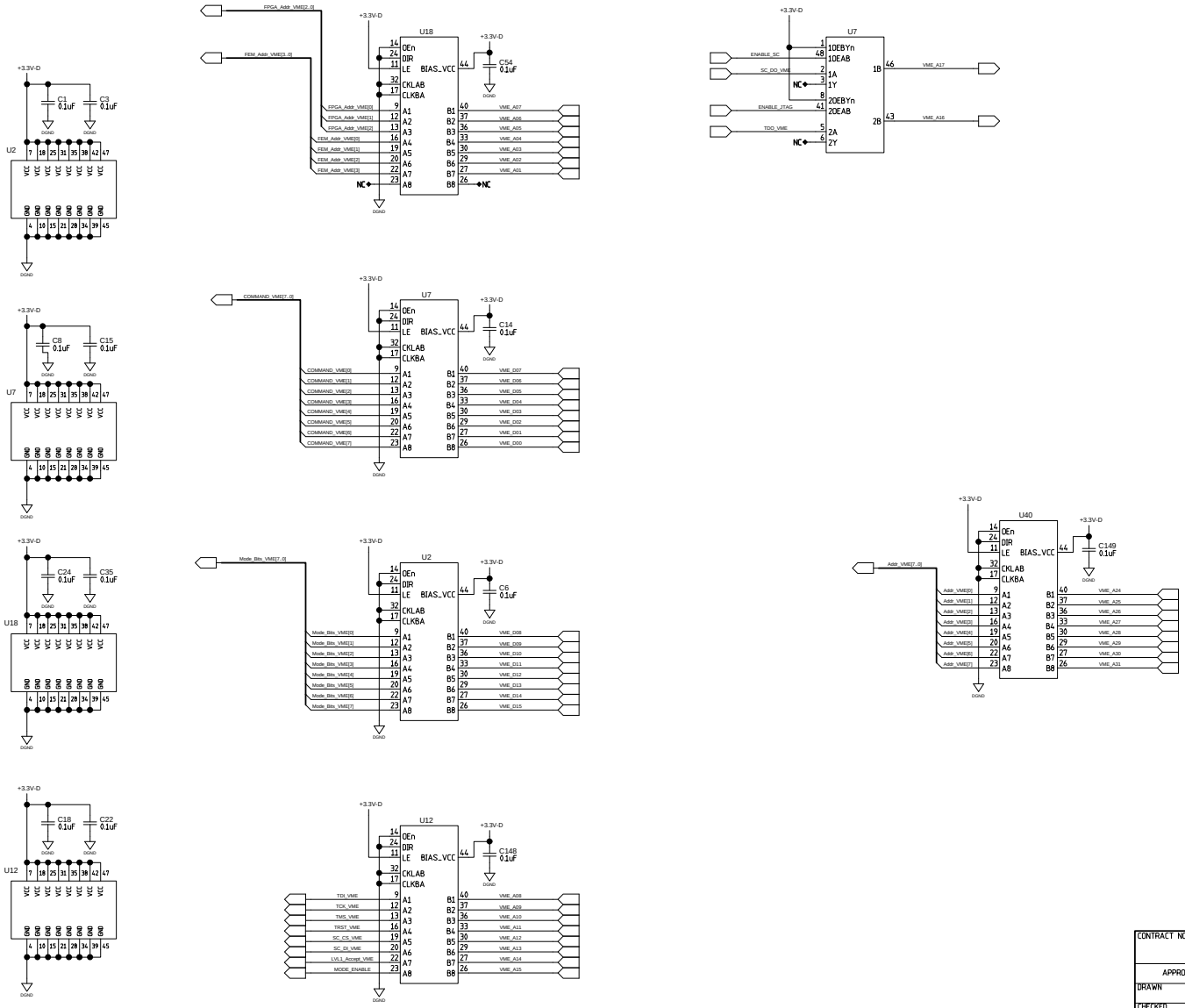

DWG. NO.	SH.	REV

REVISIONS

REV	DESCRIPTION	DATE	APPROVED

RELEASE DATE 12/10/09

CONTRACT NO.		
APPROVALS		DATE
DRAWN	M. Prokop	12/10/09
CHECKED	M. Prokop	12/10/09
ISSUED	M. Prokop	12/10/09

FVTX Front End Module
VME Form Factor

SIZE	FSCM NO.	DWG. NO.	REV
D		126Y-267961	
SCALE		SHEET 11 of 19	

H+BND: V+4LA

DWG. NO.	SH.	REV

REVISIONS

REV	DESCRIPTION	DATE	APPROVED
B	UPDATED: CORRECTED U26, U28 POWER, CHANGED 2.5V TRACKING AND SOFT-START		

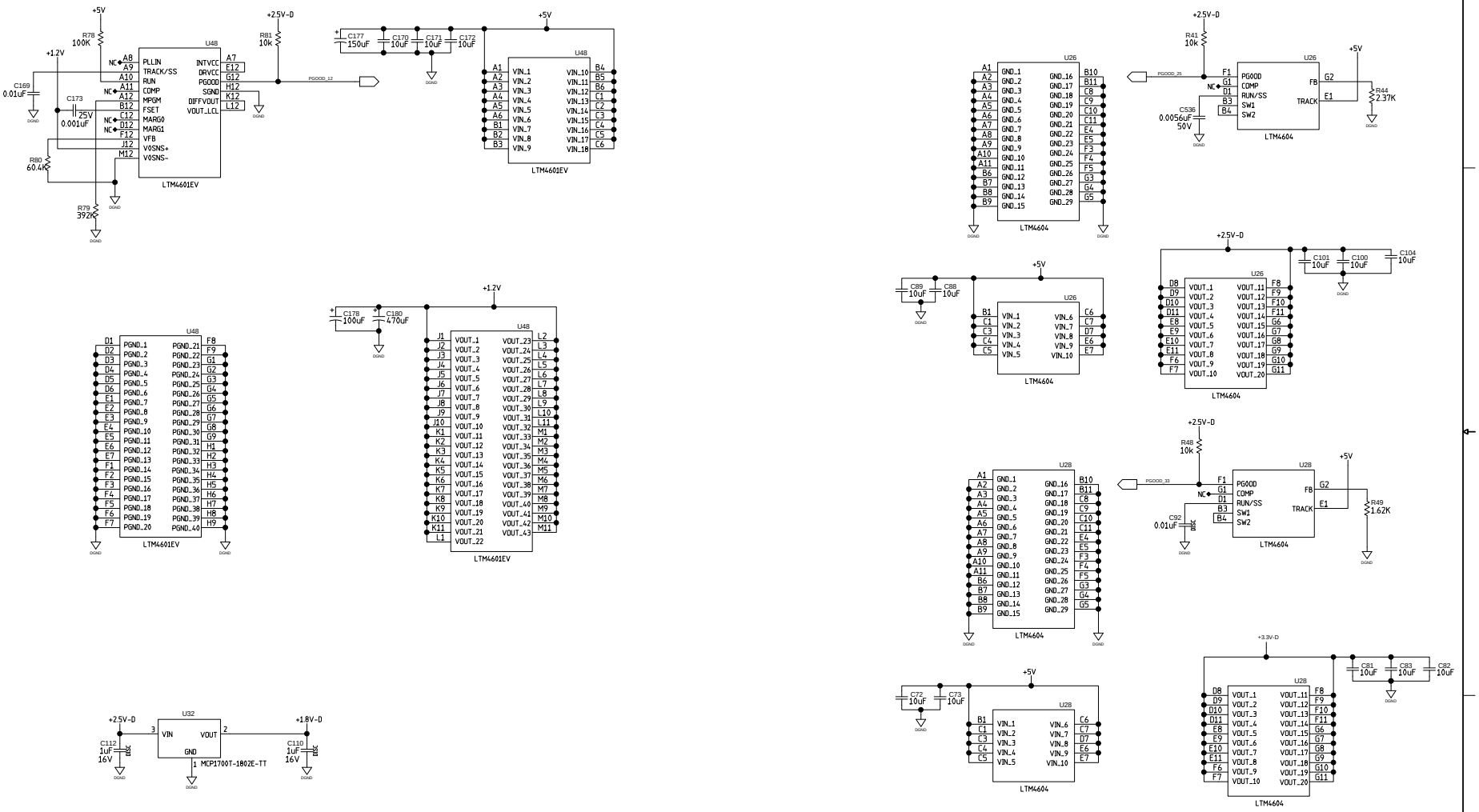

CONTRACT NO.		
APPROVALS		DATE
DRAWN	M. Prokop	12/10/09
CHECKED	M. Prokop	12/10/09
ISSUED	M. Prokop	12/10/09

FVTX Front End Module
VME Form Factor

SIZE	FSCM NO.	DWG. NO.	REV
D		126Y-267961	B
SCALE		SHEET 12 of 19	

REVISED 3/23/10

H+BND: V+4LA

DWG. NO.	SH.	REV

REVISIONS

REV	DESCRIPTION	DATE	APPROVED
B	UPDATED: CHANGED DIFFERENTIAL CLOCKS FROM BG0INn/BG0OUTn AND BG1INn/BG1OUTn TO DSOnIDS1n AND SERA/SERB.		

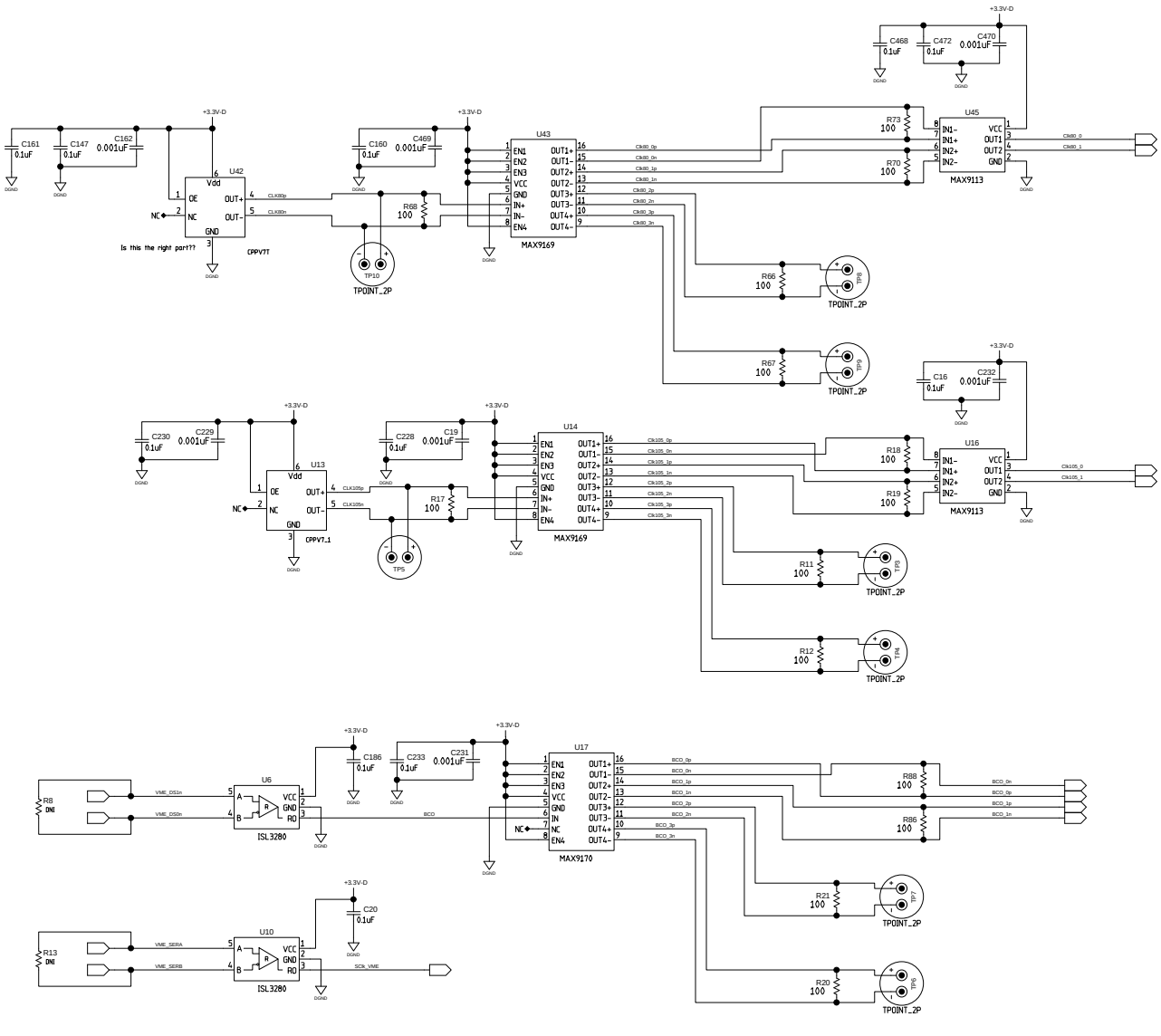

REVISED 4/5/10

CONTRACT NO.		
APPROVALS		DATE
DRAWN	M. Prokop	12/10/09
CHECKED	M. Prokop	12/10/09
ISSUED	M. Prokop	12/10/09

FVTX Front End Module
VME Form Factor

SIZE	FSCM NO.	DWG. NO.	REV
D		126Y-267961	
SCALE		SHEET 13 of 19	

H=BND: V=4LA

REVISIONS						
ZONE	REV	DESCRIPTION	CHANGED BY	DATE	CLASS REVIEW	APPROVED
	A	ORIGINAL ISSUE			NR	
	B	UPDATED: MOVED DIFFERENTIAL CLOCKS FROM BG0INn/BG0OUTn AND BG1INn/BG1OUTn TO DS0n/DS1n AND SERA/SERB.	M STOFFER			

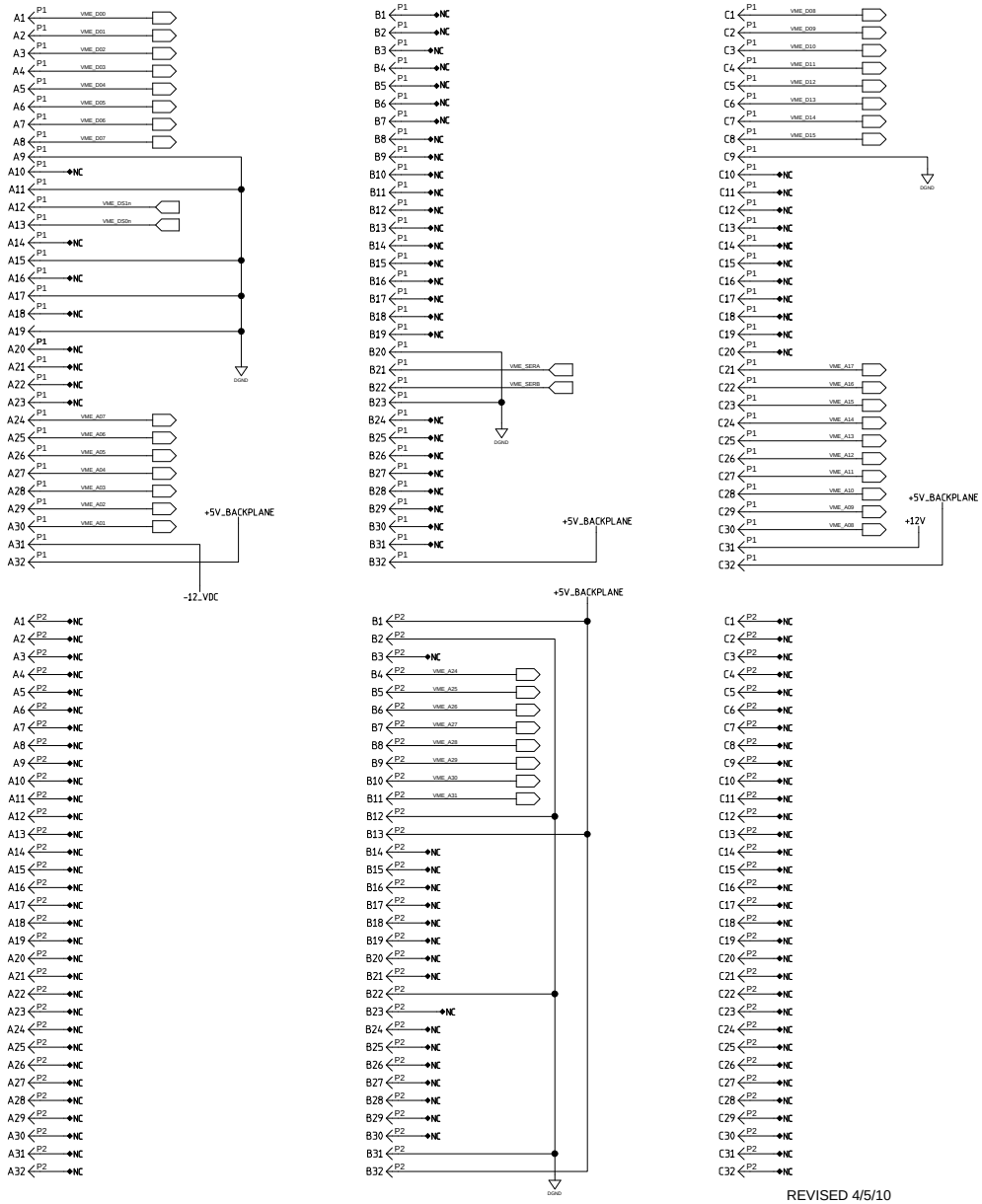

REVISED 4/5/10

QTY REQD	PART OR IDENTIFYING NO.	NOMENCLATURE OR DESCRIPTION	MATERIAL SPECIFICATION	ZONE	NO.

PART LIST/BILL OF MATERIAL

DRAWING LEVEL: UNCLASSIFIED

TASK & CONTRACTOR

CAD SYSTEM & VER.: MENTOR 2004

LOS ALAMOS — LOS ALAMOS NATIONAL LABORATORY, LOS ALAMOS, NEW MEXICO 87545

PROJECT

FVTX Front End Module
VME Form Factor

UNLESS OTHERWISE SPECIFIED DIMENSIONS ARE IN INCHES.
TOLERANCE ARE:
TOLERANCE ARE:
.X= ± .1
.XX= ± .03
.XXX= ± .005
ANGULAR ±
MACHINED FINISH ± 125

	APPROVALS	DATE	GROUP
DESIGNED	M. Prokop	05/09	AOT-RFE
DRAWN	M. Prokop	05/09	AOT-RFE
CHECKED	M. Prokop	12/10/09	AOT-RFE
ENGINEERING	M. Prokop	12/10/09	AOT-RFE
CUSTOMER	M. Prokop	12/10/09	AOT-RFE
APPROVED	M. Prokop	12/10/09	AOT-RFE
FILE PATH			

NEXT ASSEMBLY | USED ON

APPLICATION

SIZE: D | CAGE CODE | DRAWING NO. & CAD FILENAME: 126Y-267961

SCALE: NONE | SHEET 14 OF 18

DWG. NO.	SH.	REV

REVISIONS

REV	DESCRIPTION	DATE	APPROVED
B	UPDATED: ADDED 2.5V POWER TO JTAG CONNECTOR, CORRECTED NI CONNECTOR (J1) PINOUT		

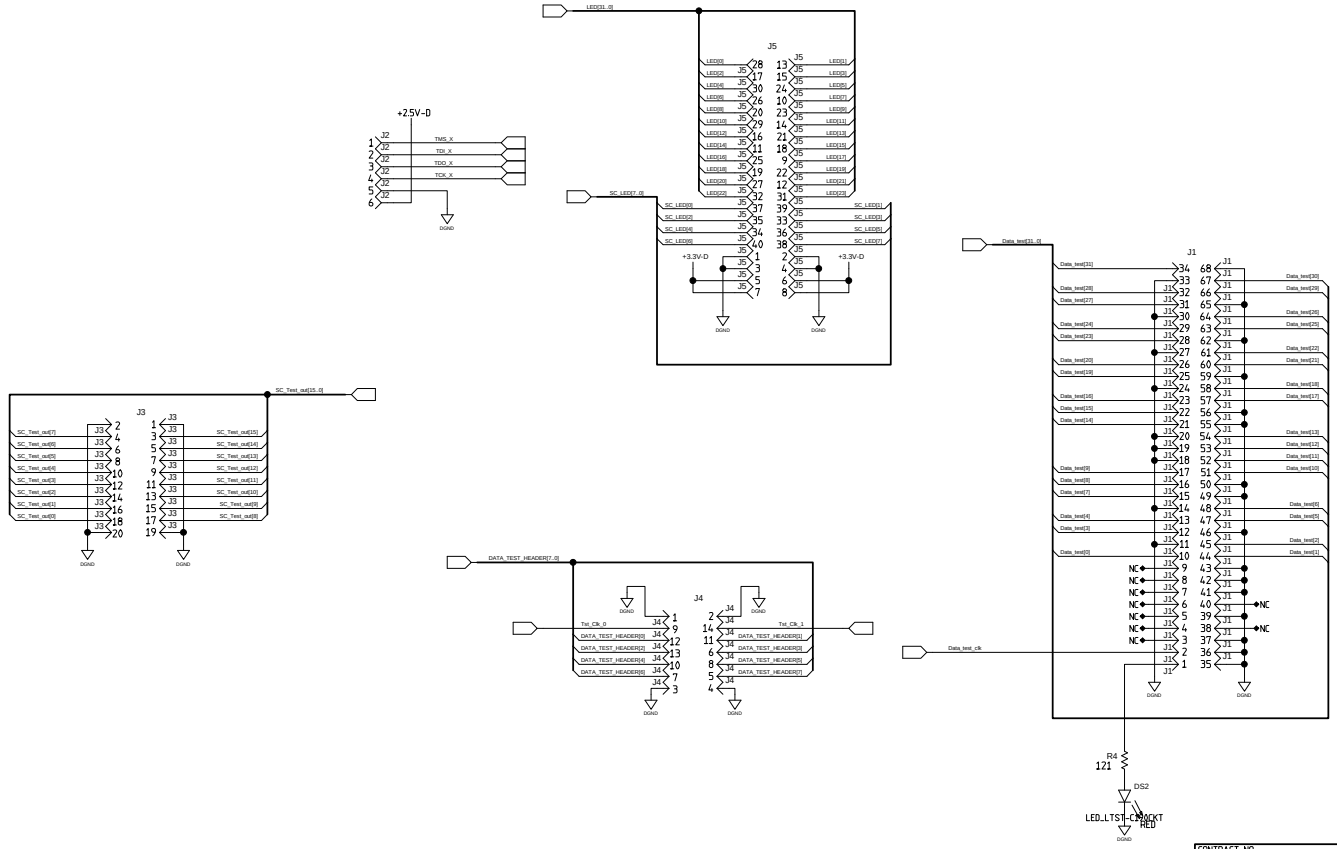

REVISED 3/16/10

CONTRACT NO.		
APPROVALS	DATE	
DRAWN M. Prokop	12/10/09	FVTX Front End Module VME Form Factor
CHECKED M. Prokop	12/10/09	
ISSUED M. Prokop	12/10/09	

SIZE	FSCM NO.	DWG. NO.	REV
D		126Y-267961	B
SCALE		SHEET 15 of 19	

H=BND: V=4LA

DWG. NO.	SH.	REV

REVISIONS

REV	DESCRIPTION	DATE	APPROVED
B	UPDATED: CHANGED DCM PART FROM TLK2711 TO TLK2501, ADDED ASSOCIATED PARTS AND CHANGED SIGNAL NAMES		

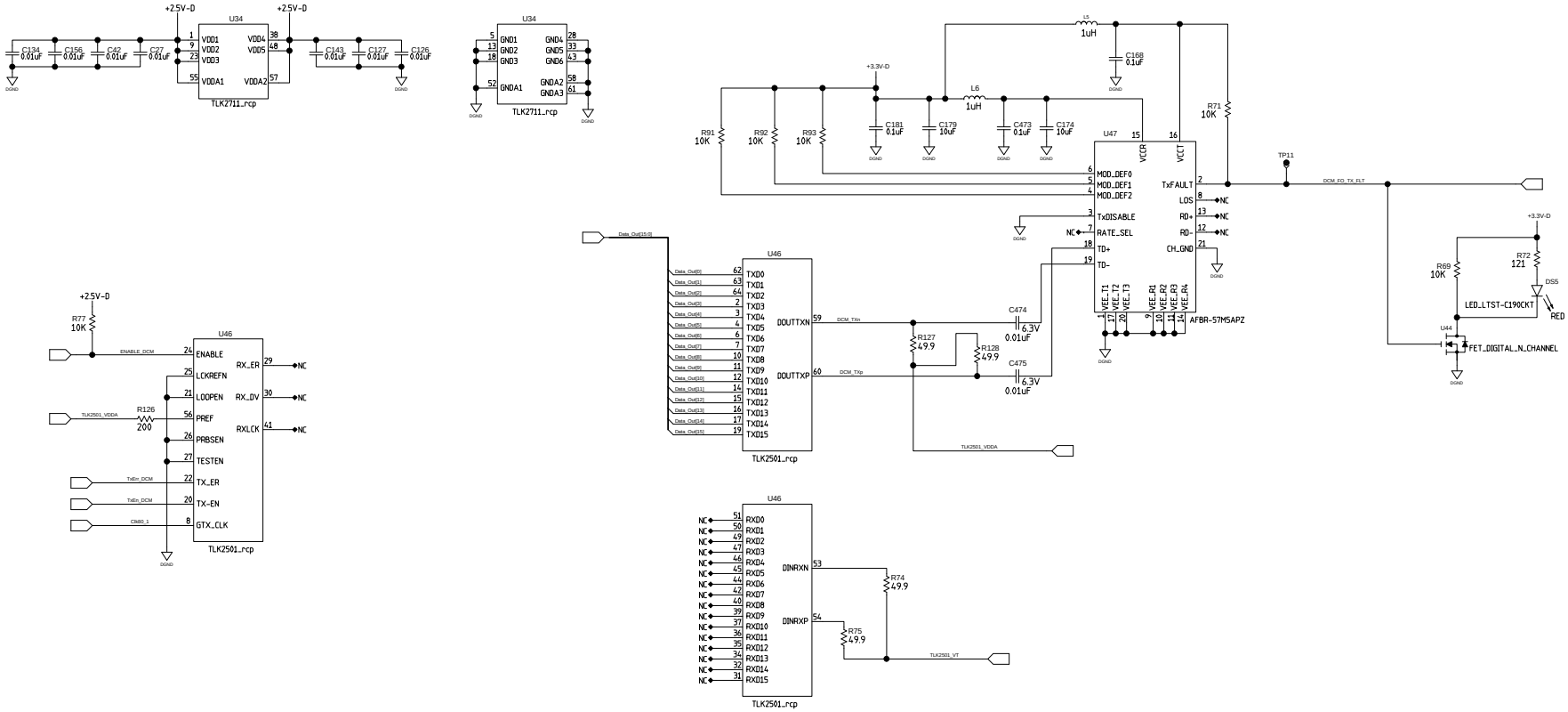

REVISED 3/17/10

CONTRACT NO.			
APPROVALS		DATE	FVTX Front End Module VME Form Factor
DRAWN	M. Prokop	12/10/09	
CHECKED	M. Prokop	12/10/09	
ISSUED	M. Prokop	12/10/09	

SIZE	FSCM NO.	DWG. NO.	REV
D		126Y-267961	B
SCALE		SHEET 16 of 19	

H=BND: V=4LA

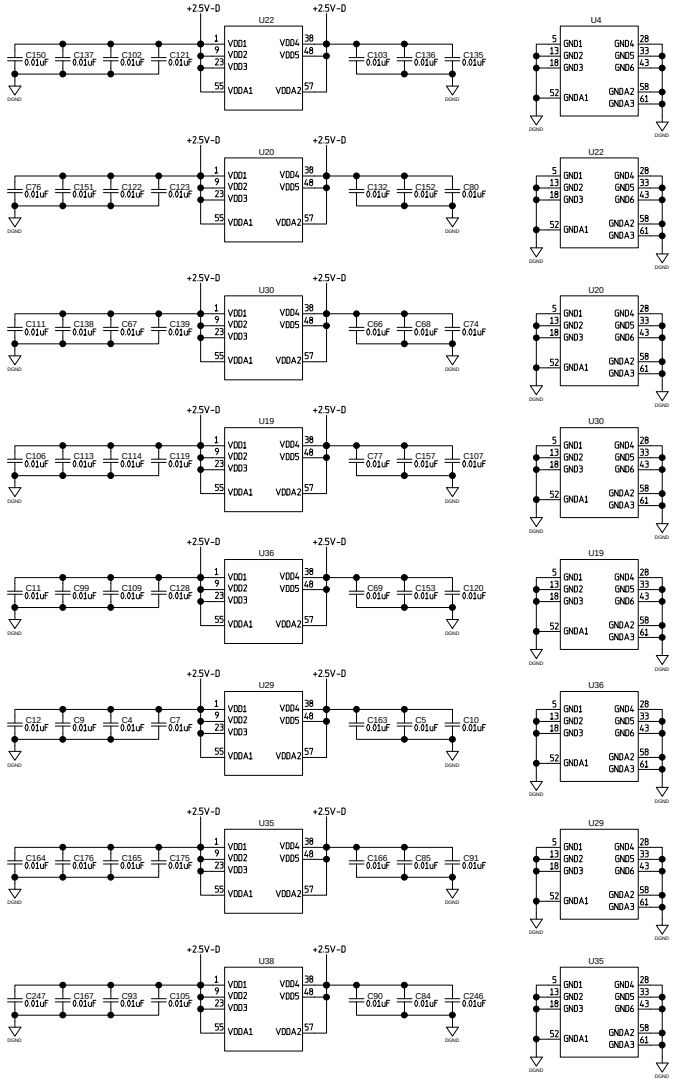

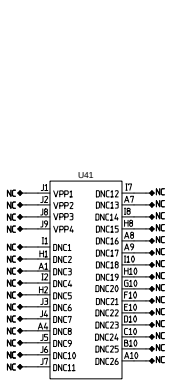

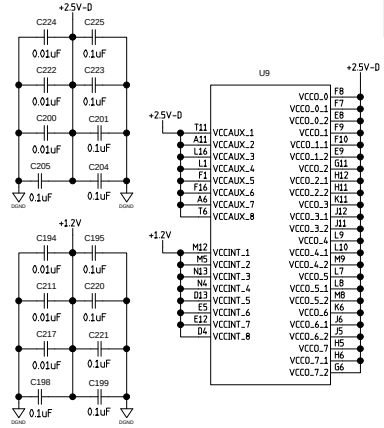

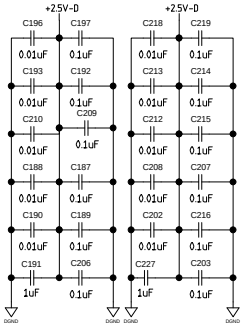

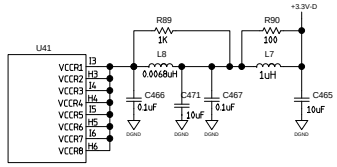

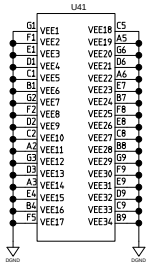

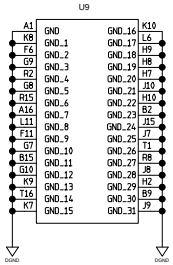

DWG. NO.	SH.	REV

REVISIONS

REV	DESCRIPTION	DATE	APPROVED

CONTRACT NO.		
APPROVALS		DATE
DRAWN	M. Prokop	12/10/09
CHECKED	M. Prokop	12/10/09
ISSUED	M. Prokop	12/10/09

FVTX Front End Module
VME Form Factor

SIZE	FSCM NO.	DWG. NO.	REV
D		126Y-267961	
SCALE		SHEET 17 of 19	

RELEASE DATE 12/10/09

H=BND: V=4LA

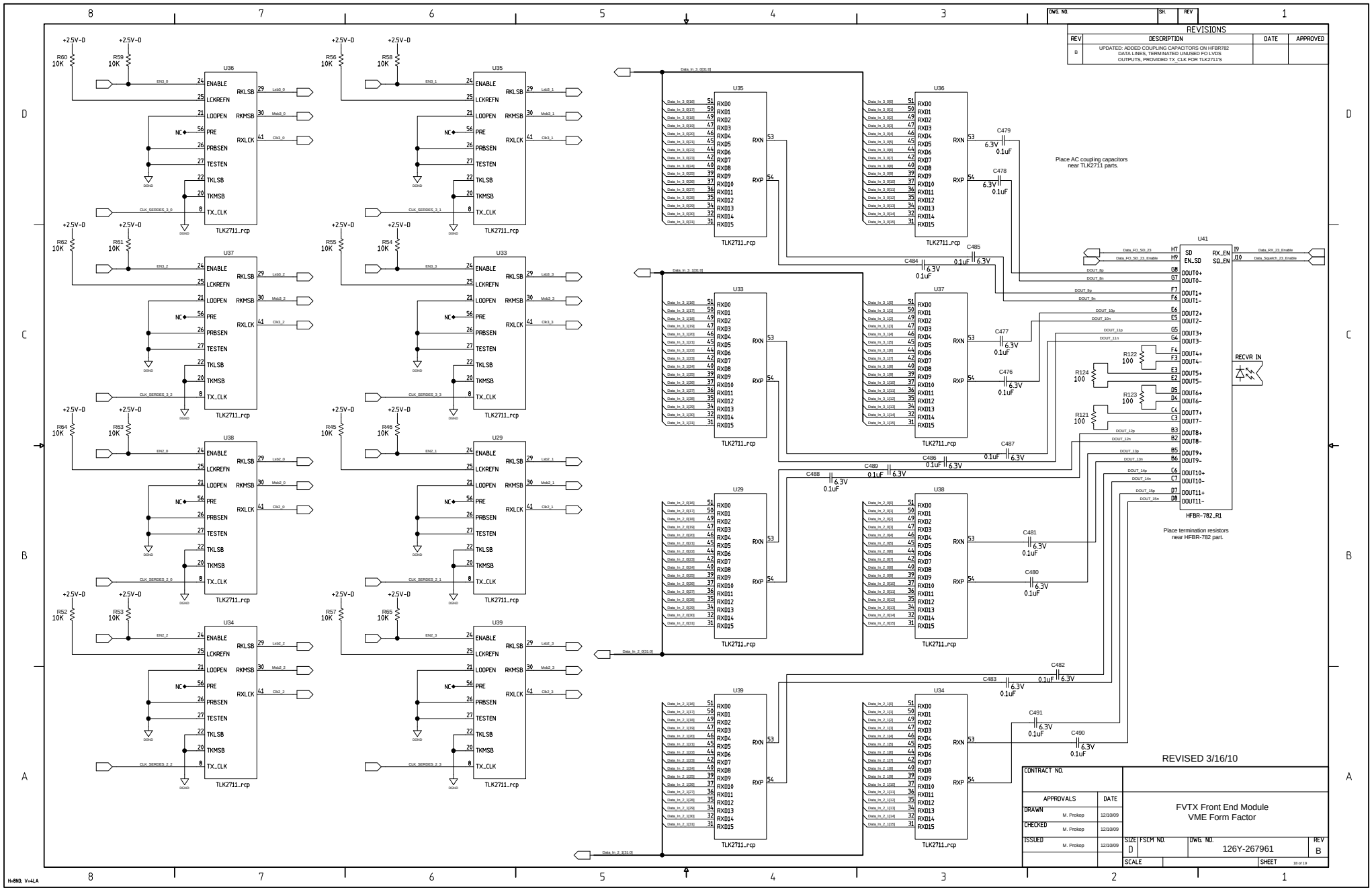
REVISIONS
REV | DESCRIPTION | DATE | APPROVED
B | UPDATED: ADDED COUPLING CAPACITORS ON HFBR782 DATA LINES, TERMINATED UNUSED FO LVDS OUTPUTS, PROVIDED TX_CLK FOR TLK2711'S
Place AC coupling capacitors near TLK2711 parts.
Place termination resistors near HFBR-782 part.
RECVR_IN
HFBR-782_R1
TLK2711_rcp
REVISED 3/16/10
CONTRACT NO.
APPROVALS | DATE
DRAWN M. Prokop 12/10/09
CHECKED M. Prokop 12/10/09
ISSUED M. Prokop 12/10/09
FVTX Front End Module
VME Form Factor
SIZE D | FSCM NO. | DWG. NO. 126Y-267961 | REV B
SCALE | SHEET 18 of 19

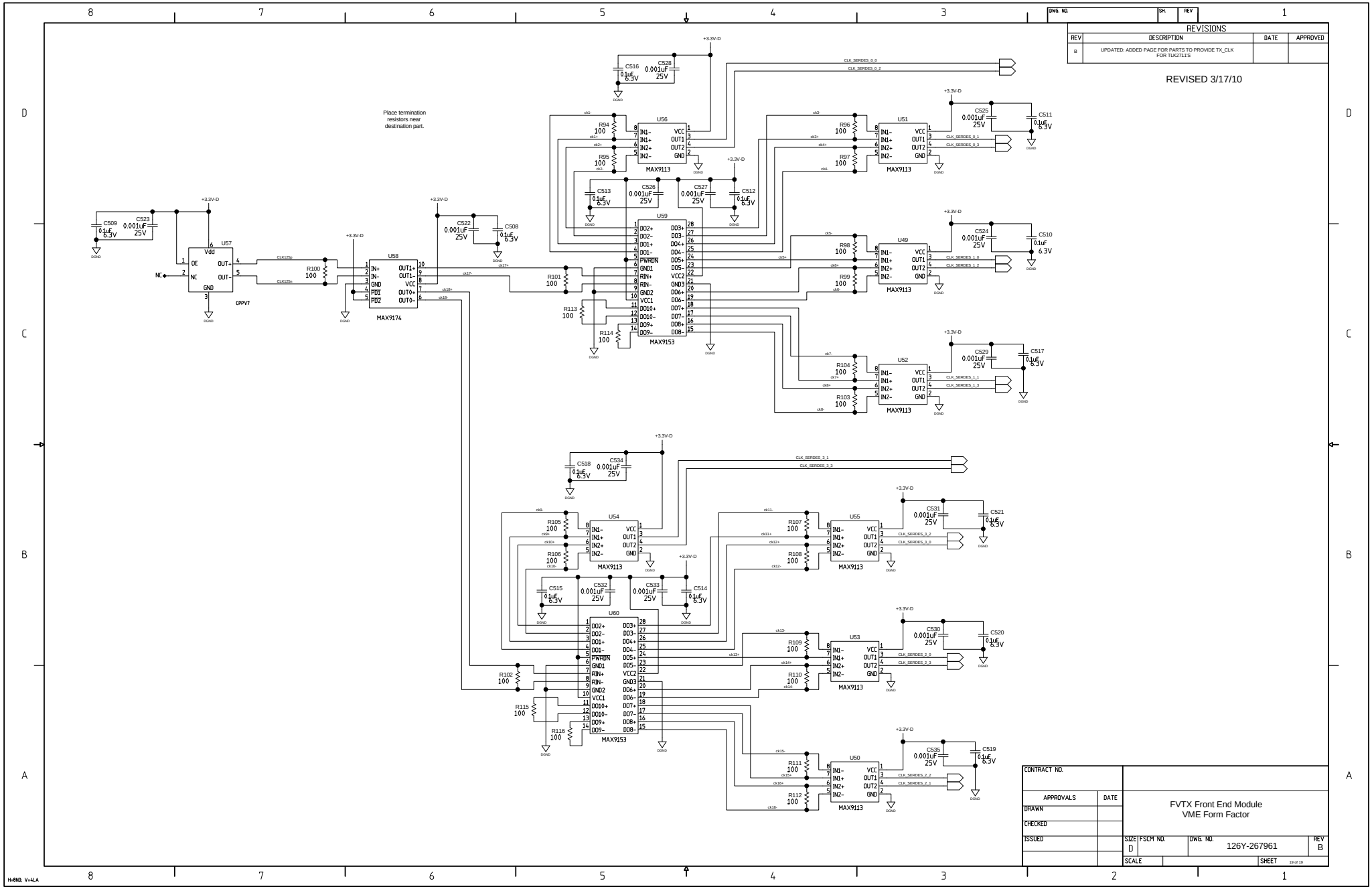
DWG. NO.
SH.
REV
REVISIONS
REV
DESCRIPTION
DATE
APPROVED
B
UPDATED: ADDED PAGE FOR PARTS TO PROVIDE TX_CLK FOR TLK2711'S
REVISED 3/17/10
Place termination resistors near destination part.
U56
MAX9113
U51
MAX9113
U59
MAX9153
U49
MAX9113
U52
MAX9113
U57
CPPV7
U58
MAX9174
U54
MAX9113
U55
MAX9113
U60
MAX9153
U53
MAX9113
U50
MAX9113
CLK_SERDES_0_0
CLK_SERDES_0_2
CLK_SERDES_0_1
CLK_SERDES_0_3
CLK_SERDES_1_0
CLK_SERDES_1_2
CLK_SERDES_1_1
CLK_SERDES_1_3
CLK_SERDES_3_1
CLK_SERDES_3_3
CLK_SERDES_3_2
CLK_SERDES_3_0
CLK_SERDES_2_0
CLK_SERDES_2_3
CLK_SERDES_2_2
CLK_SERDES_2_1
CLK125p
CLK125n
+3.3V-D
DGND
CONTRACT NO.
APPROVALS
DATE
DRAWN
CHECKED
ISSUED
FVTX Front End Module
VME Form Factor
SIZE
D
FSCM NO.
DWG. NO.
126Y-267961
REV
B
SCALE
SHEET
19 of 19
H+BND: V+4LA