ZONE	REV	DESCRIPTION	CHANGED BY	DATE	CLASS REVIEW	APPROVED
	A	ORIGINAL ISSUE			NR	
	B	UPDATED CORRECTED U26, U28 POWER, ADDED COUPLING CAPACITORS ON MFBN0782 DATA LINES, PROVIDED TX CLK FOR TLK2711'S, CORRECTED NI CONNECTOR PINOUT, ADDED 2.5V POWER TO JTAG CONNECTOR, TERMINATED UNUSED FO LVDS OUTPUTS, CHANGED OEM PART FROM TLK2711 TO TLK2501, CHANGED ASSOCIATED SIGNAL NAMES, ADDED ASSOCIATED PARTS	M STOFFER			

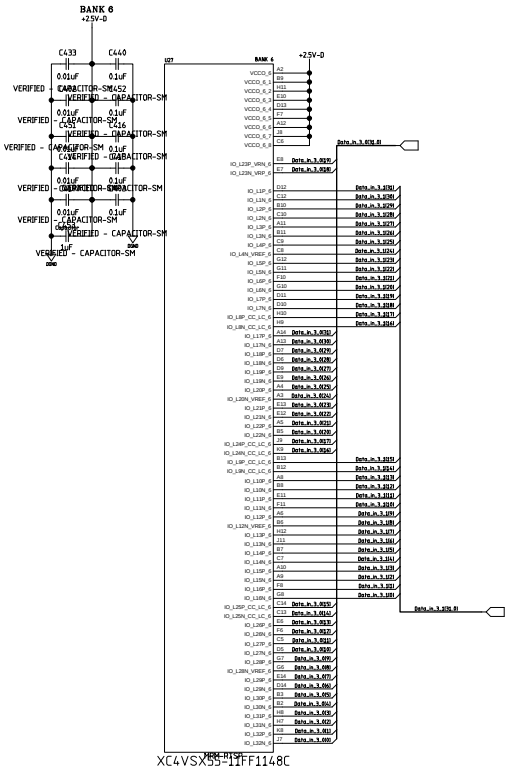

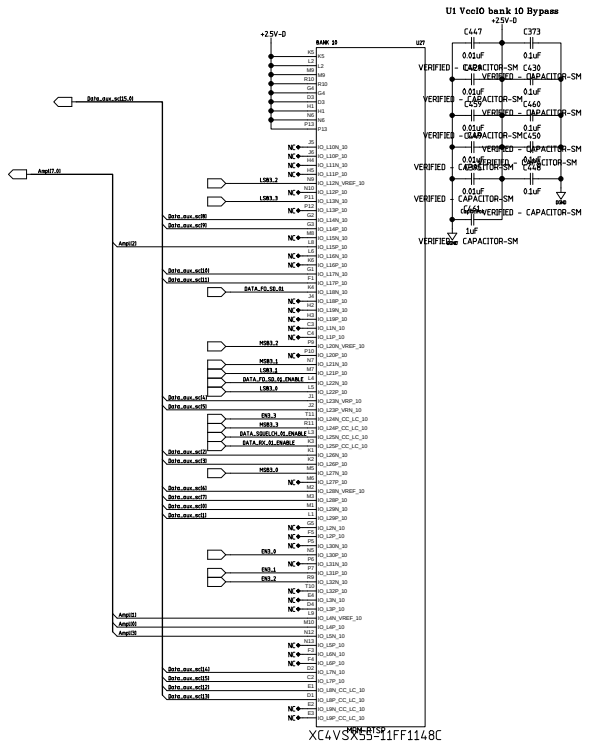

REVISED 3/17/10

QTY REQD	PART OR IDENTIFYING NO.	NOMENCLATURE OR DESCRIPTION	MATERIAL SPECIFICATION	ZONE	NO.

PART LIST/BILL OF MATERIAL

DRAWING LEVEL: UNCLASSIFIED

WG2004

TASK & CONTRACTOR: LOS ALAMOS — LOS ALAMOS NATIONAL LABORATORY, LOS ALAMOS, NEW MEXICO 87545

CAD SYSTEM & VER.

UNLESS OTHERWISE SPECIFIED: DIMENSIONS ARE IN INCHES. TOLERANCE ANG. ±. TOLERANCE ANG. .XX ± .01, .XXX ± .005. ANGULAR ±. MACHINED FINISH ± 125

	APPROVALS	DATE	GROUP
DESIGNED	M. Prokop	05/09	AGT-RFE
DRAWN	M. Prokop	05/09	AGT-RFE
CHECKED	M. Prokop	12/10/09	AGT-RFE
ENGINEERING	M. Prokop	12/10/09	AGT-RFE
CUSTOMER	M. Prokop	12/10/09	AGT-RFE
APPROVED	M. Prokop	12/10/09	AGT-RFE
FILE PATH			

NEXT ASSEMBLY | USED ON | APPLICATION

FVTX Front End Module
VME Form Factor

SIZE: E | CAGE CODE: SCHEMATIC | DRAWING NO. & CAD FILENAME: 126Y-267961

SCALE: NONE | SHEET 1 OF 19

REVISIONS						
ZONE	REV	DESCRIPTION	CHANGED BY	DATE	CLASS REVIEW	APPROVED
		ORIGINAL ISSUE			NR	

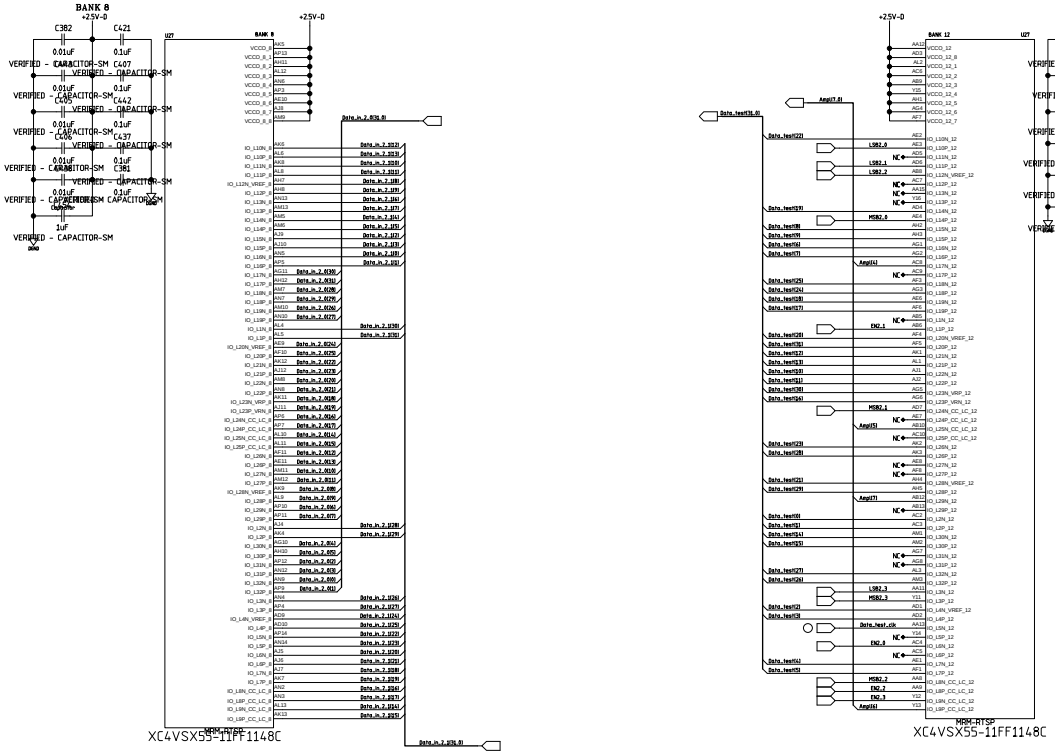

RELEASE DATE 12/10/09

QTY REQD	PART OR IDENTIFYING NO.	NOMENCLATURE OR DESCRIPTION	MATERIAL SPECIFICATION	ZONE	NO.

PART LIST/BILL OF MATERIAL

DRAWING LEVEL	TASK & CONTRACTOR	LOS ALAMOS LOS ALAMOS NATIONAL LABORATORY LOS ALAMOS, NEW MEXICO 87545			
UNCLASSIFIED	WG2004				
	CAD SYSTEM & VER				
UNLESS OTHERWISE SPECIFIED: DIMENSIONS ARE IN INCHES. TOLERANCE ARE: .XX ± .01 .XXX ± .005 ANGULAR ± 1/2° MACHINED FINISH ± 125	APPROVALS	DATE	GROUP	FVTX Front End Module VME Form Factor	
	DESIGNED M. Prokop	05/09	AGT-RFE		
	DRAWN M. Prokop	05/09	AGT-RFE		
	CHECKED M. Prokop	12/10/09	AGT-RFE		
	ENGINEERING M. Prokop	12/10/09	AGT-RFE		
	CUSTOMER M. Prokop	12/10/09	AGT-RFE	SIZE E	CAGE CODE SCHEMATIC / DRAWING NO. & CAD FILENAME 126Y-267961
NEXT ASSEMBLY / USED ON	APPROVED M. Prokop	12/10/09	AGT-RFE		
APPLICATION	FILE PATH			SCALE NONE	SHEET 2 OF 19

ZONE	REV	DESCRIPTION	CHANGED BY	DATE	CLASS REVIEW	APPROVED
		ORIGINAL ISSUE			NR	

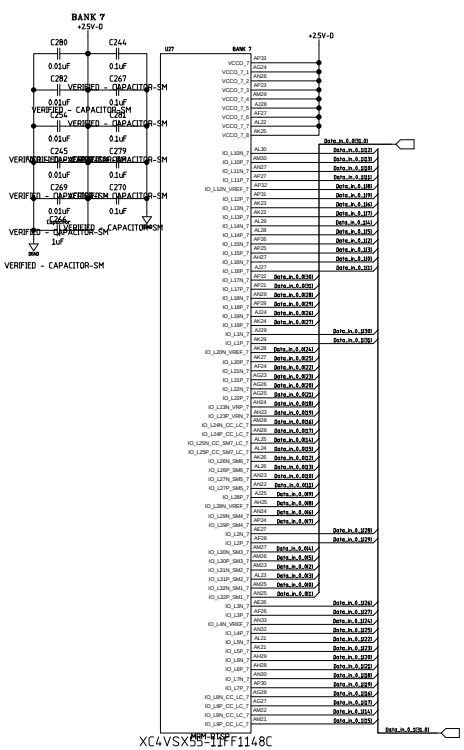

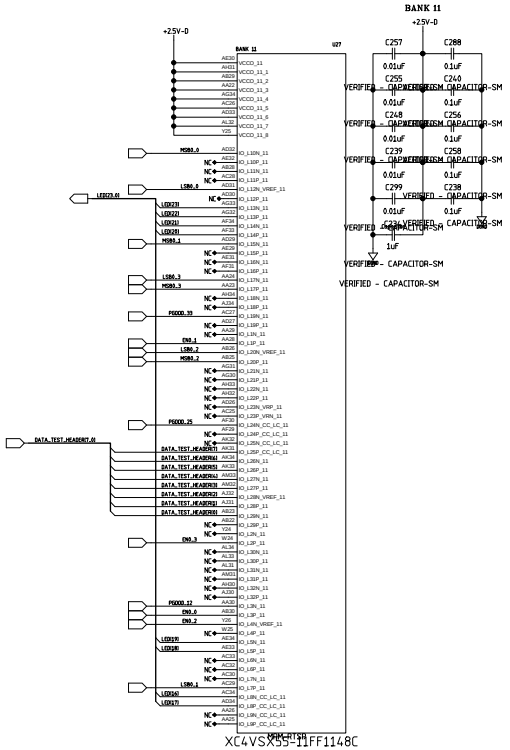

RELEASE DATE 12/10/09

QTY REQD	PART OR IDENTIFYING NO.	NOMENCLATURE OR DESCRIPTION	MATERIAL SPECIFICATION	ZONE	NO.

PART LIST/BILL OF MATERIAL

DRAWING LEVEL: UNCLASSIFIED

TASK & CONTRACTOR: WG2004

CAD SYSTEM & VER:

LOS ALAMOS — LOS ALAMOS NATIONAL LABORATORY, LOS ALAMOS, NEW MEXICO 87545

UNLESS OTHERWISE SPECIFIED: DIMENSIONS ARE IN INCHES. TOLERANCE ANG. ±. TOLERANCE ANG. .X ± .1, .XX ± .05, .XXX ± .005. ANGULAR ±. MACHINED FINISH ± 125

	APPROVALS	DATE	GROUP
DESIGNED	M. Prokop	05/09	AGT-RFE
DRAWN	M. Prokop	05/09	AGT-RFE
CHECKED	M. Prokop	12/10/09	AGT-RFE
ENGINEERING	M. Prokop	12/10/09	AGT-RFE
CUSTOMER	M. Prokop	12/10/09	AGT-RFE
APPROVED	M. Prokop	12/10/09	AGT-RFE

NEXT ASSEMBLY | USED ON | APPLICATION | FILE PATH

FVTX Front End Module
VME Form Factor

SIZE E | CAGE CODE SCHEMATIC | DRAWING NO. & CAD FILENAME 126Y-267961

SCALE NONE | SHEET 3 OF 19

ZONE	REV	DESCRIPTION	CHANGED BY	DATE	CLASS REVIEW	APPROVED
	A	ORIGINAL ISSUE			NR	
	B	UPDATED. CHANGED DCM PART FROM TLK2711 TO TLK2501. CHANGED ASSOCIATED SIGNAL NAMES	M STOFFER			

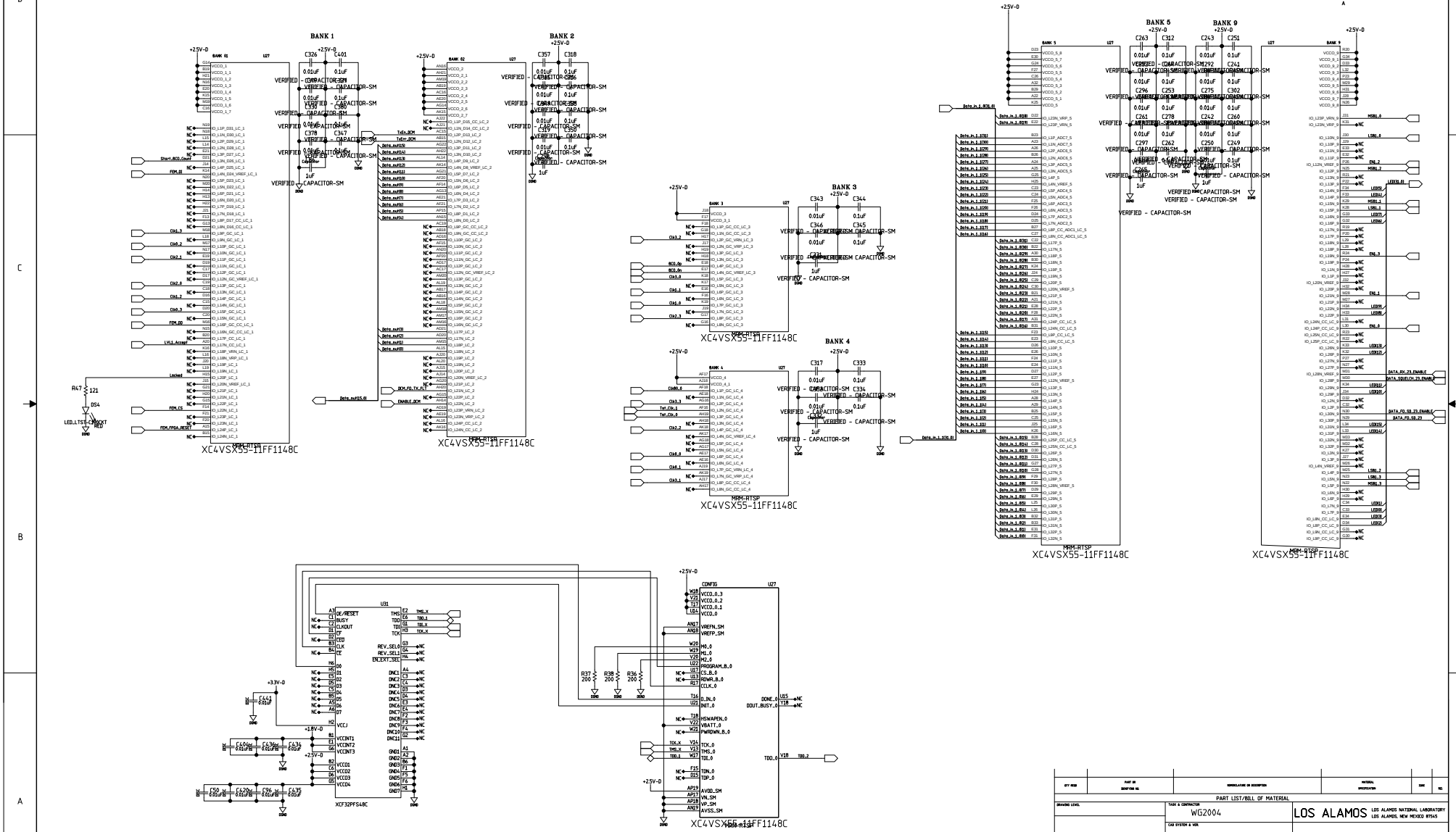

QTY REQD	PART OR IDENTIFYING NO.	NOMENCLATURE OR DESCRIPTION	MATERIAL SPECIFICATION	ITEM NO.

PART LIST/BILL OF MATERIAL

DRAWING LEVEL: UNCLASSIFIED

TASK & CONTRACTOR: WG2004

CAD SYSTEM & VER.

LOS ALAMOS — LOS ALAMOS NATIONAL LABORATORY, LOS ALAMOS, NEW MEXICO 87545

UNLESS OTHERWISE SPECIFIED: DIMENSIONS ARE IN INCHES. TOLERANCE ANG. ±1/2°. TOLERANCE ANG. .XX ± 0.01, .XXX ± 0.005. ANGULAR ± 1/2°. MACHINED FINISH ± 125

	APPROVALS	DATE	GROUP
DESIGNED	M. Prokop	05/09	AGT-RFE
DRAWN	M. Prokop	05/09	AGT-RFE
CHECKED	M. Prokop	12/10/09	AGT-RFE
ENGINEERING	M. Prokop	12/10/09	AGT-RFE
CUSTOMER	M. Prokop	12/10/09	AGT-RFE
APPROVED	M. Prokop	12/10/09	AGT-RFE
FILE PATH			

NEXT ASSEMBLY | USED ON | APPLICATION

FVTX Front End Module
VME Form Factor

SIZE: E | CAGE CODE: | DRAWING NO. & CAD FILENAME: SCHEMATIC 126Y-267961

SCALE: NONE | SHEET 4 OF 19

REVISIONS						
ZONE	REV	DESCRIPTION	CHANGED BY	DATE	CLASS REVIEW	APPROVED
		ORIGINAL ISSUE			NR	

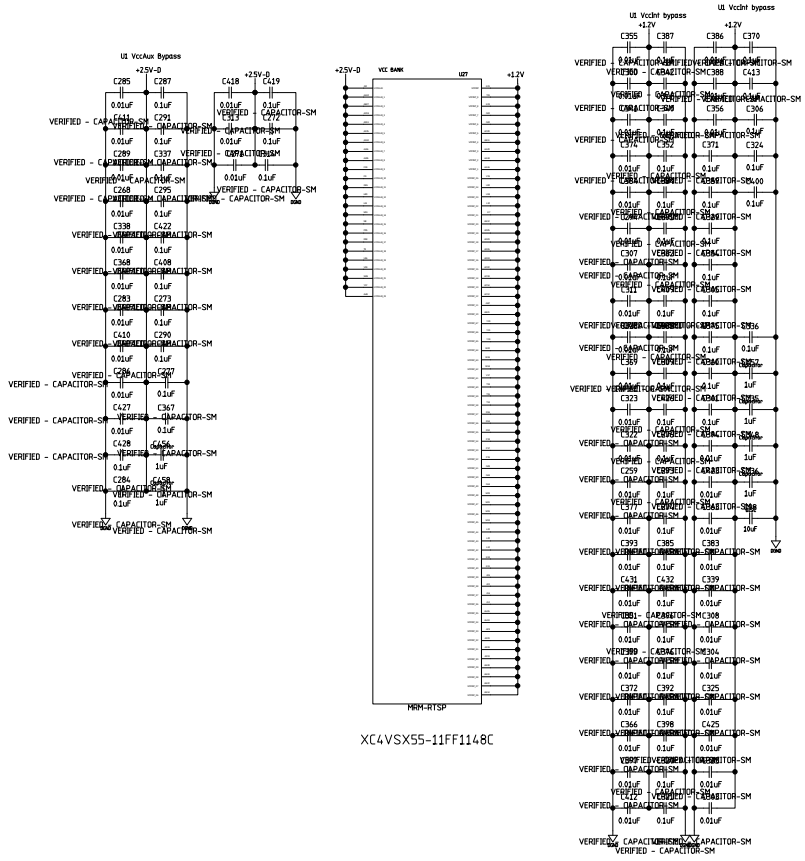
U1 VccAux Bypass
+25V-D
C285
C287
C418
C419
C441
C291
C289
C337
C268
C295
C338
C422
C368
C408
C283
C273
C410
C290
C427
C367
C428
C284
C268
C283
C273
C410
C290
C427
C367
C428
C284
C268
C283
C273
C410
C290
C427
C367
C428
C284
C268

DWG. NO.	SH.	REV

REVISIONS

REV	DESCRIPTION	DATE	APPROVED
B	UPDATED: CHANGED XCF02S VCCJ AND VCCO TO 2.5V		

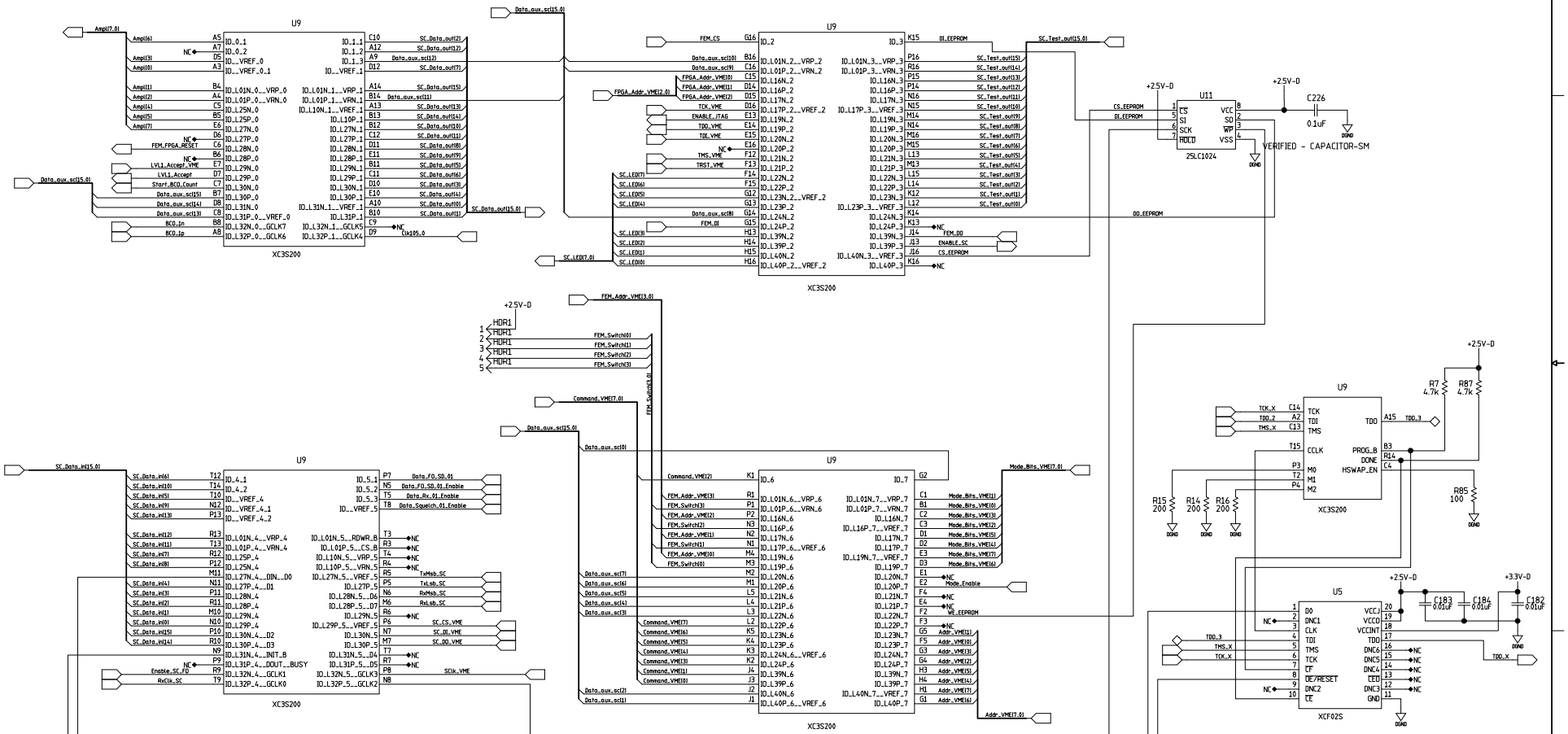

REVISED 3/23/10

CONTRACT NO.		
APPROVALS		DATE
DRAWN	M. Prokop	12/10/09
CHECKED	M. Prokop	12/10/09
ISSUED	M. Prokop	12/10/09

FVTX Front End Module
VME Form Factor

SIZE	FSCM NO.	DWG. NO.	REV
D		126Y-267961	
SCALE		SHEET 6 of 19	

H=BND: V=4LA

DWG. NO.	SH.	REV

REVISIONS

REV	DESCRIPTION	DATE	APPROVED
B	UPDATED: CHANGED DCM PART FROM TLK2711 TO TLK2501. ADDED ASSOCIATED PARTS AND SIGNAL NAMES		

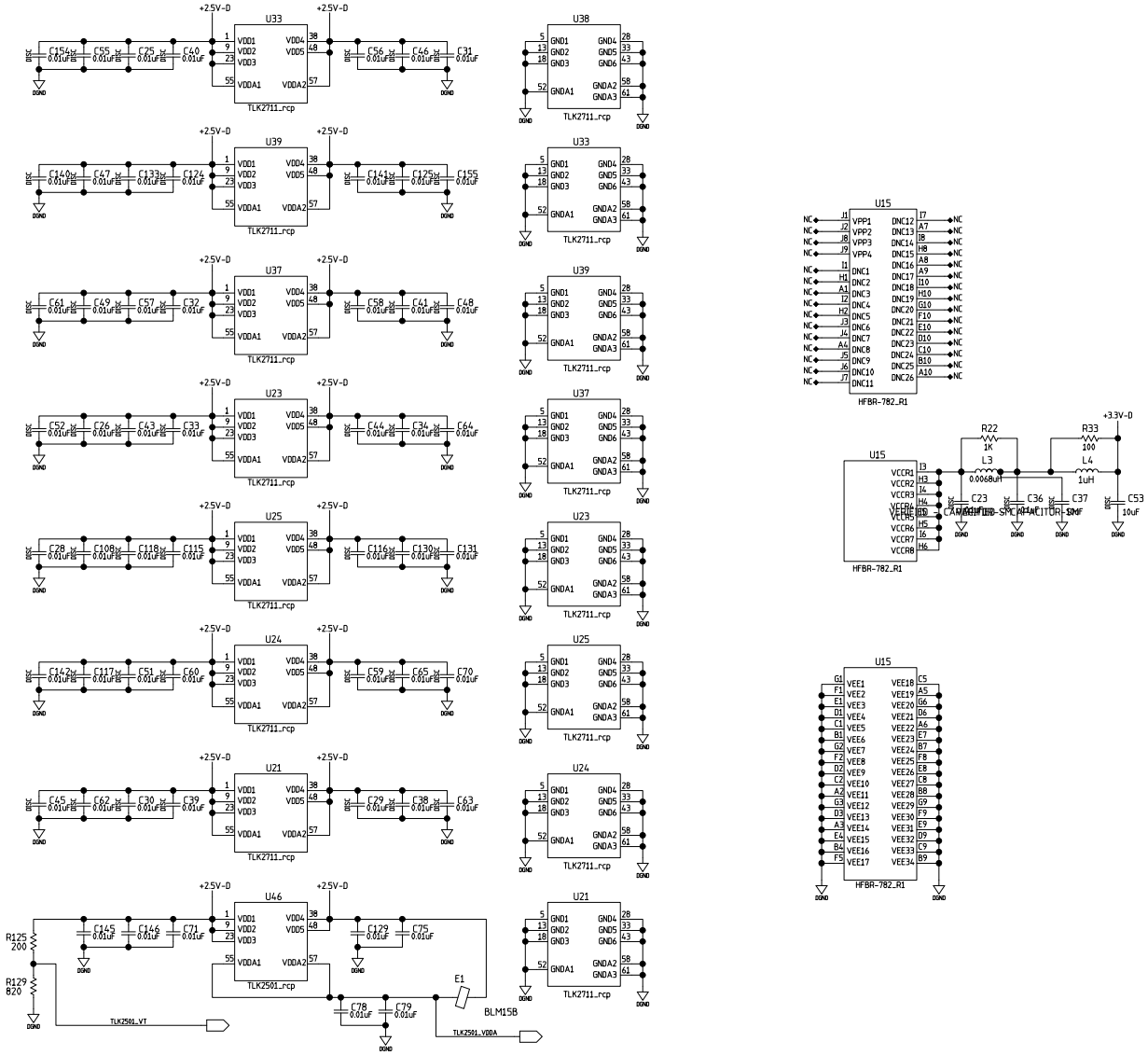

REVISED 3/17/10

CONTRACT NO.			
APPROVALS		DATE	FVTX Front End Module VME Form Factor
DRAWN	M. Prokop	12/10/09	
CHECKED	M. Prokop	12/10/09	
ISSUED	M. Prokop	12/10/09	

SIZE	FSCM NO.	DWG. NO.	REV
D		126Y-267961	B
SCALE		SHEET 7 of 19	

H=BND; V=4LA

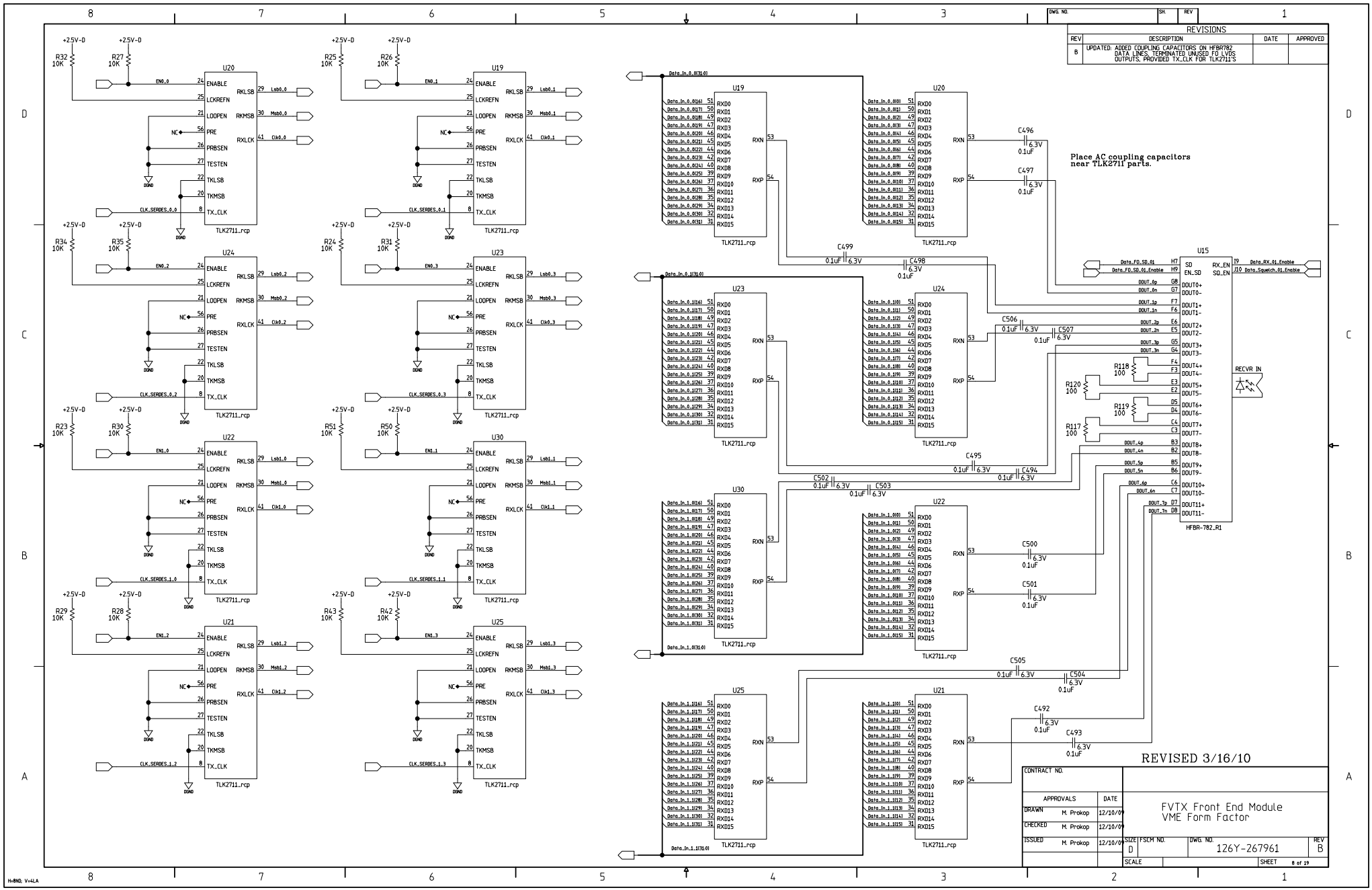
REVISIONS
REV | DESCRIPTION | DATE | APPROVED
B | UPDATED: ADDED COUPLING CAPACITORS ON HFBR782 DATA LINES, TERMINATED UNUSED FD LVDS OUTPUTS, PROVIDED TX_CLK FOR TLK2711'S
Place AC coupling capacitors near TLK2711 parts.
REVISED 3/16/10
FVTX Front End Module
VME Form Factor
APPROVALS | DATE
DRAWN M. Prokop 12/10/09
CHECKED M. Prokop 12/10/09
ISSUED M. Prokop 12/10/09
SIZE D
DWG. NO. 126Y-267961
REV B
SHEET 8 of 19
U20
U19
U24
U23
U22
U30
U21
U25
U15
TLK2711_rcp
HFBR-782_R1
RECVR IN
H=8ND; V=4LA

DWG. NO.	SH.	REV

REVISIONS

REV	DESCRIPTION	DATE	APPROVED

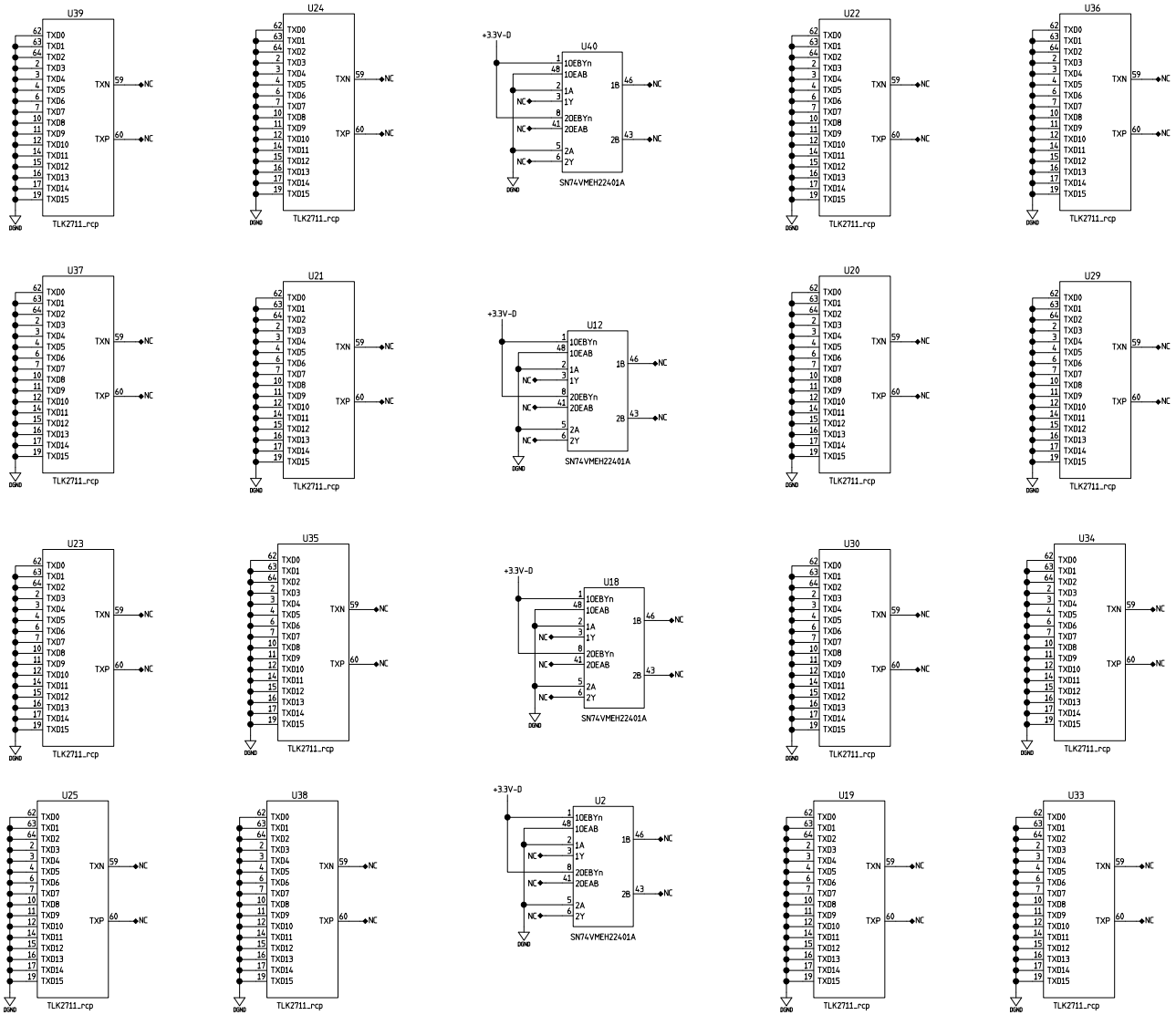

RELEASE DATE 12/10/09

CONTRACT NO.			
APPROVALS		DATE	FVTX Front End Module VME Form Factor
DRAWN	M. Prokop	12/10/09	
CHECKED	M. Prokop	12/10/09	
ISSUED	M. Prokop	12/10/09	

SIZE	FSCM NO.	DWG. NO.	REV
D		126Y-267961	
SCALE		SHEET 9 of 19	

H=BND: V=4LA

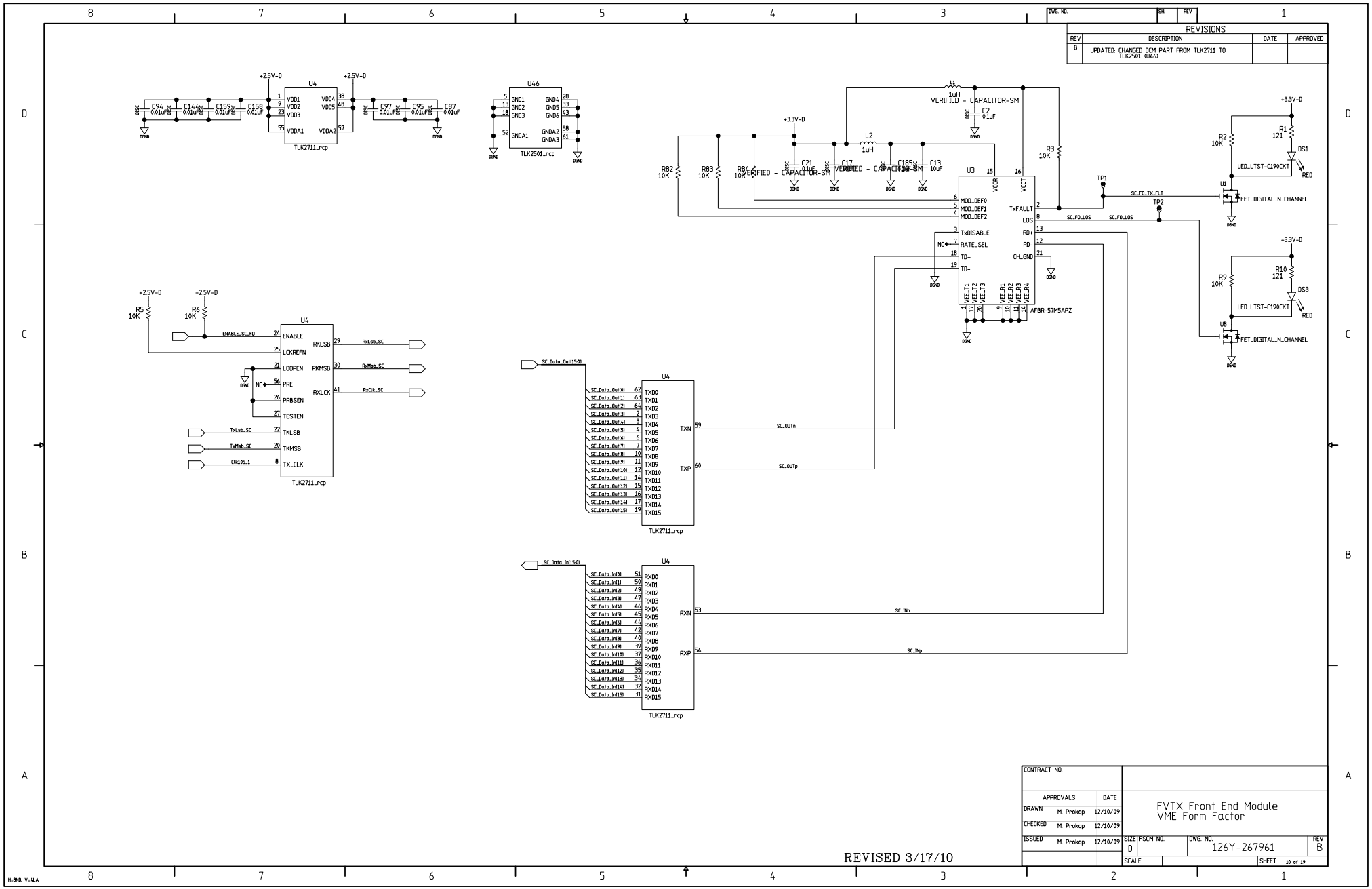
REVISIONS
REV | DESCRIPTION | DATE | APPROVED
B | UPDATED: CHANGED DCM PART FROM TLK2711 TO TLK2501 (U46)
U4
TLK2711_rcp
U46
TLK2501_rcp
+2.5V-D
+3.3V-D
DGND
C94 0.01uF
C144 0.01uF
C159 0.01uF
C158 0.01uF
C97 0.01uF
C95 0.01uF
C87 0.01uF
VDD1
VDD2
VDD3
VDDA1
VDD4
VDD5
VDDA2
GND1
GND2
GND3
GNDA1
GND4
GND5
GND6
GNDA2
GNDA3
L1 1uH
VERIFIED - CAPACITOR-SM
C2 0.1uF
L2 1uH
C21 0.1uF
C17 0.1uF
C185 0.1uF
C13 10uF
R82 10K
R83 10K
R84 10K
R3 10K
U3
AFBR-57M5APZ
VCCR
VCCT
MOD_DEF0
MOD_DEF1
MOD_DEF2
TxDISABLE
RATE_SEL
TD+
TD-
TxFAULT
LOS
RD+
RD-
CH_GND
VEE_T1
VEE_T2
VEE_T3
VEE_R1
VEE_R2
VEE_R3
VEE_R4
TP1
TP2
SC_FO_TX_FLT
SC_FO_LOS
R2 10K
R1 121
DS1
LED_LTST-C190CKT
RED
U1
FET_DIGITAL_N_CHANNEL
R9 10K
R10 121
DS3
U8
R5 10K
R6 10K
ENABLE_SC_FO
ENABLE
LCKREFN
LOOPEN
PRE
PRBSEN
TESTEN
TKLSB
TKMSB
TX_CLK
RXLSB
RXMSB
RXCLK
RxLsb_SC
RxMsb_SC
RxClk_SC
TxLsb_SC
TxMsb_SC
Clk105_1
SC_Data_Out(15:0)
SC_Data_Out(0)
SC_Data_Out(1)
SC_Data_Out(2)
SC_Data_Out(3)
SC_Data_Out(4)
SC_Data_Out(5)
SC_Data_Out(6)
SC_Data_Out(7)
SC_Data_Out(8)
SC_Data_Out(9)
SC_Data_Out(10)
SC_Data_Out(11)
SC_Data_Out(12)
SC_Data_Out(13)
SC_Data_Out(14)
SC_Data_Out(15)
TXD0
TXD1
TXD2
TXD3
TXD4
TXD5
TXD6
TXD7
TXD8
TXD9
TXD10
TXD11
TXD12
TXD13
TXD14
TXD15
TXN
TXP
SC_OUTn
SC_OUTp
SC_Data_In(15:0)
SC_Data_In(0)
SC_Data_In(1)
SC_Data_In(2)
SC_Data_In(3)
SC_Data_In(4)
SC_Data_In(5)
SC_Data_In(6)
SC_Data_In(7)
SC_Data_In(8)
SC_Data_In(9)
SC_Data_In(10)
SC_Data_In(11)
SC_Data_In(12)
SC_Data_In(13)
SC_Data_In(14)
SC_Data_In(15)
RXD0
RXD1
RXD2
RXD3
RXD4
RXD5
RXD6
RXD7
RXD8
RXD9
RXD10
RXD11
RXD12
RXD13
RXD14
RXD15
RXN
RXP
SC_INn
SC_INp
REVISED 3/17/10
CONTRACT NO.
APPROVALS | DATE
DRAWN M. Prokop 12/10/09
CHECKED M. Prokop 12/10/09
ISSUED M. Prokop 12/10/09
FVTX Front End Module
VME Form Factor
SIZE D
FSCM NO.
DWG. NO. 126Y-267961
REV B
SCALE
SHEET 10 of 19

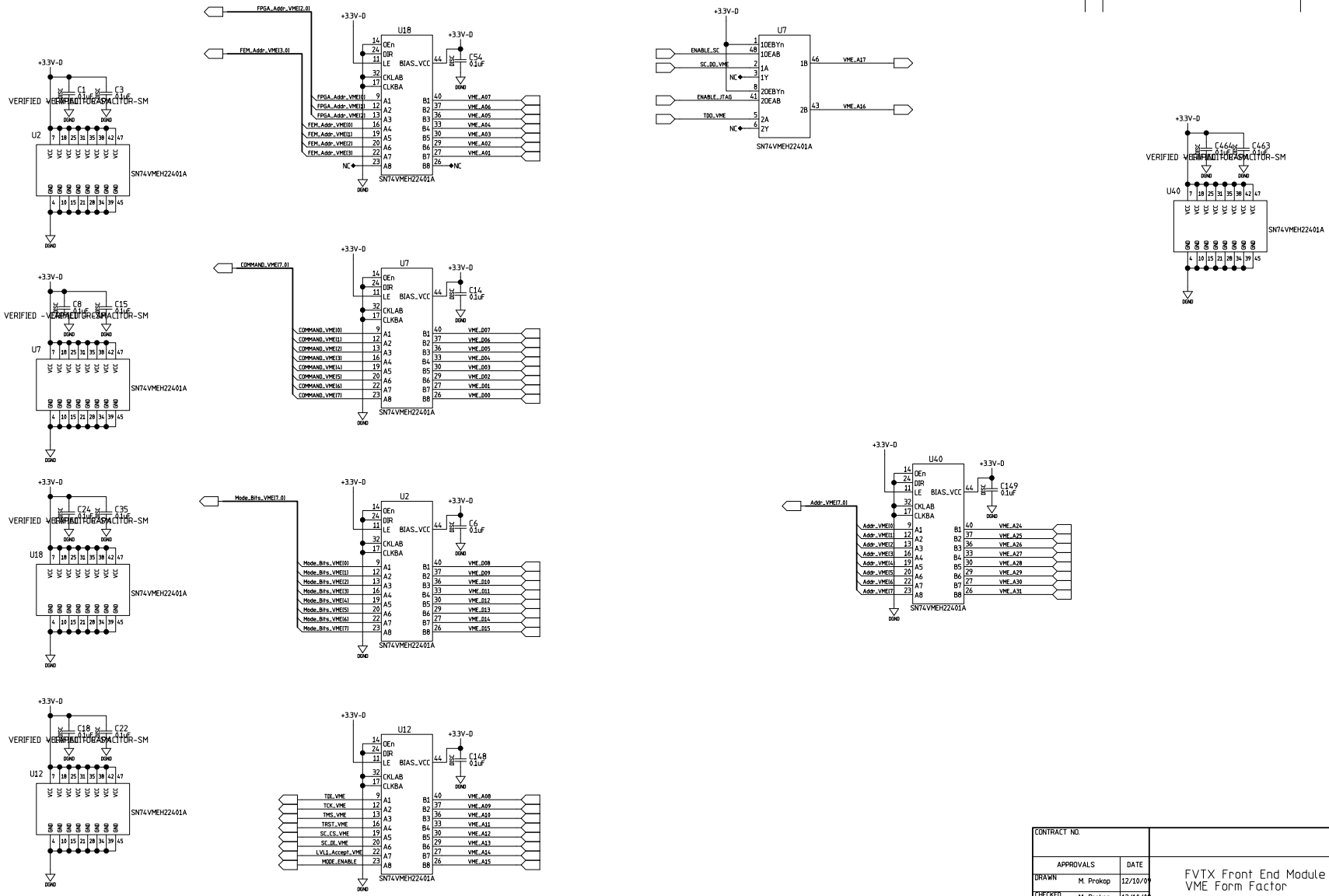

REVISIONS			
REV	DESCRIPTION	DATE	APPROVED

CONTRACT NO.			
APPROVALS		DATE	FVTX Front End Module VME Form Factor
DRAWN	M. Prokop	12/10/09	
CHECKED	M. Prokop	12/10/09	
ISSUED	M. Prokop	12/10/09	

SIZE	FSCM NO.	DWG. NO.	REV
D		126Y-267961	
SCALE		SHEET 11 of 19	

RELEASE DATE 12/10/09

H+BND: V+4LA

DWG. NO.	SH.	REV

REVISIONS

REV	DESCRIPTION	DATE	APPROVED
B	UPDATED: CORRECTED U26, U28 POWER, CHANGED 2.5V TRACKING AND SOFT-START		

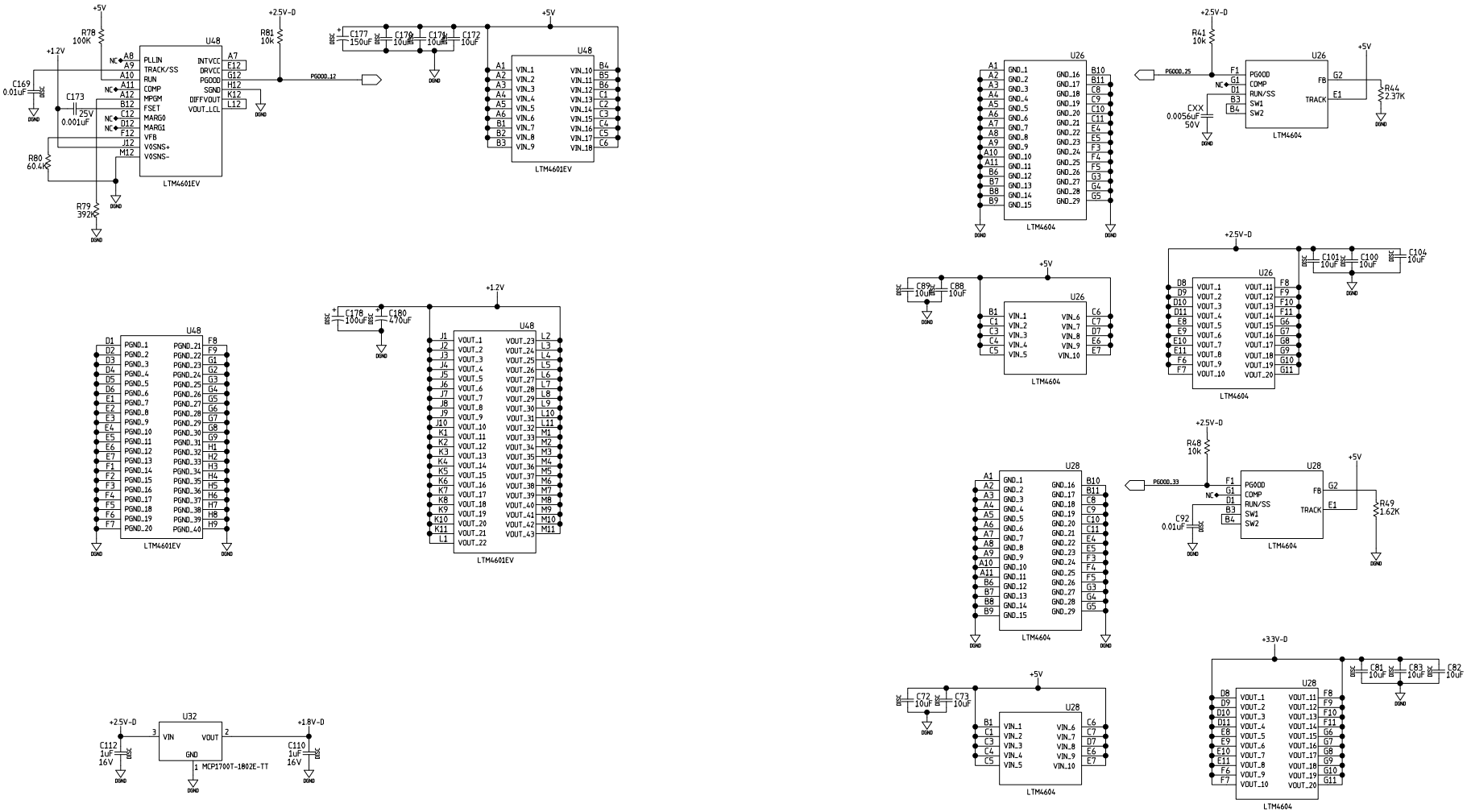

REVISED 3/23/10

CONTRACT NO.			
APPROVALS		DATE	FVTX Front End Module VME Form Factor
DRAWN	M. Prokop	12/10/09	
CHECKED	M. Prokop	12/10/09	
ISSUED	M. Prokop	12/10/09	

SIZE	FSCM NO.	DWG. NO.	REV
D		126Y-267961	B
SCALE		SHEET 12 of 19	

H+BND: V+4LA

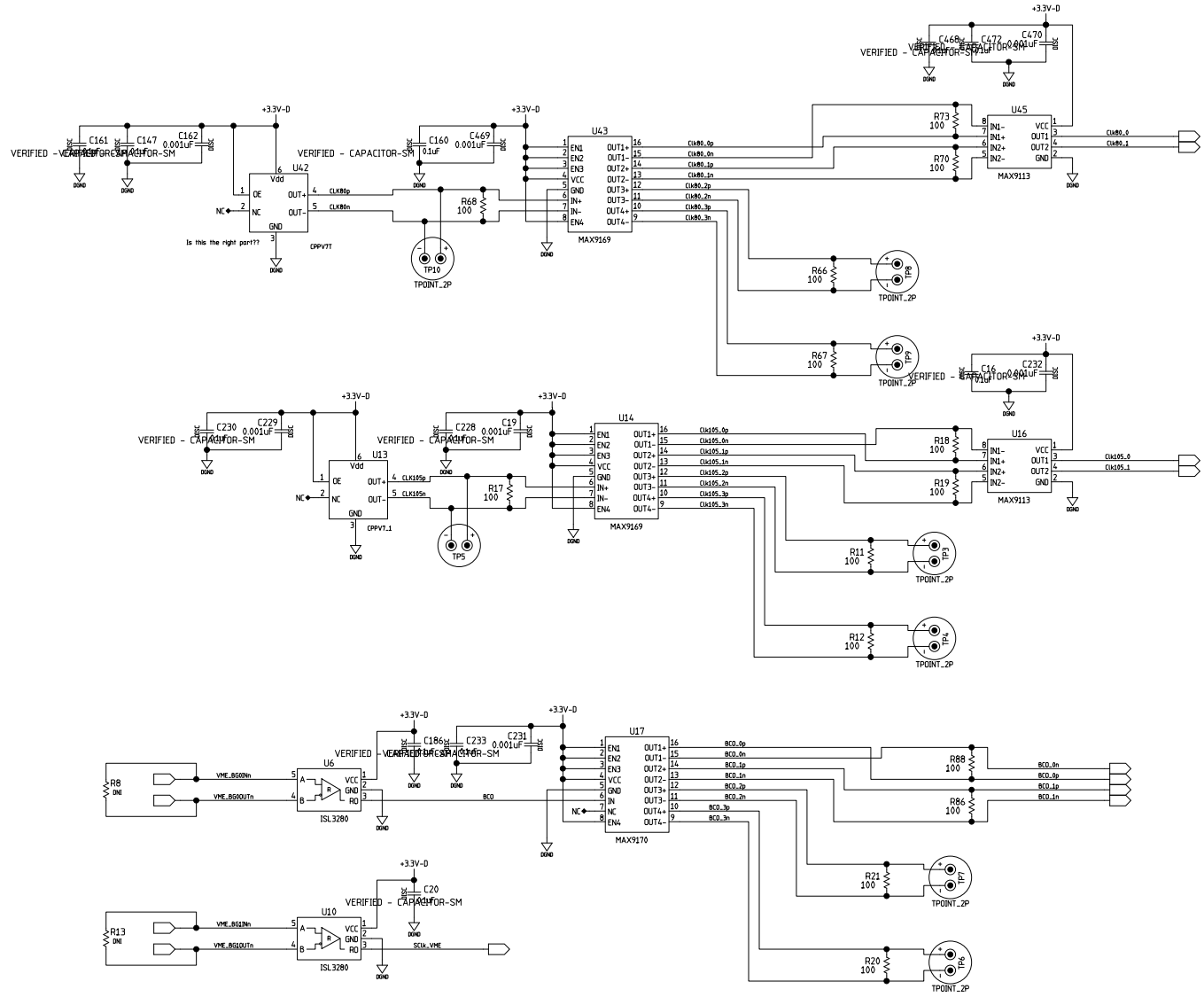

RELEASE DATE 12/10/09

REVISIONS			
REV	DESCRIPTION	DATE	APPROVED

CONTRACT NO.		
APPROVALS		DATE
DRAWN	M. Prokop	12/10/09
CHECKED	M. Prokop	12/10/09
ISSUED	M. Prokop	12/10/09

FVTX Front End Module
VME Form Factor

SIZE	FSCM NO.	DWG. NO.	REV
D		126Y-267961	
SCALE		SHEET 13 of 19	

H+BND: V+4LA

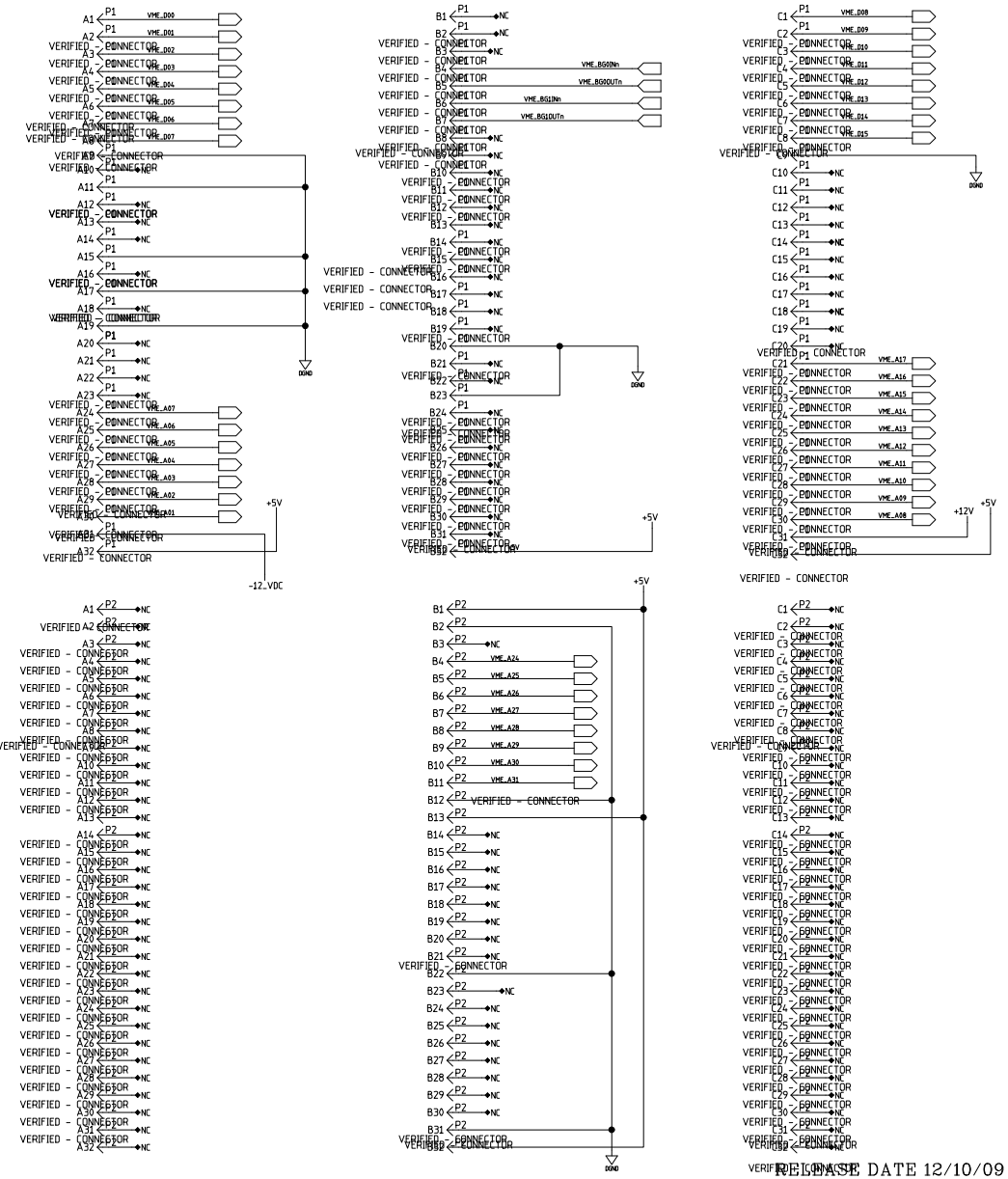

REVISIONS						
ZONE	REV	DESCRIPTION	CHANGED BY	DATE	CLASS REVIEW	APPROVED
	A	ORIGINAL ISSUE			NR	

QTY REQD	PART OR IDENTIFYING NO.	NOMENCLATURE OR DESCRIPTION	MATERIAL SPECIFICATION	ZONE	NO.

PART LIST/BILL OF MATERIAL

DRAWING LEVEL

UNCLASSIFIED

TASK & CONTRACTOR

CAD SYSTEM & VER. MENTOR 2004

LOS ALAMOS — LOS ALAMOS NATIONAL LABORATORY, LOS ALAMOS, NEW MEXICO 87545

PROJECT

FVTX Front End Module
VME Form Factor

UNLESS OTHERWISE SPECIFIED DIMENSIONS ARE IN INCHES.
TOLERANCE ARE:
TOLERANCE ARE: ANGULAR ± MACHINED FINISH ± 125

	APPROVALS	DATE	GROUP
DESIGNED	M. Prokop	05/09	AOT-RFE
DRAWN	M. Prokop	05/09	AOT-RFE
CHECKED	M. Prokop	12/10/09	AOT-RFE
ENGINEERING	M. Prokop	12/10/09	AOT-RFE
CUSTOMER	M. Prokop	12/10/09	AOT-RFE
APPROVED	M. Prokop	12/10/09	AOT-RFE
FILE PATH			

NEXT ASSEMBLY | USED ON

APPLICATION

SIZE D | CAGE CODE | DRAWING NO. & CAD FILENAME 126Y-267961

SCALE NONE | SHEET 14 OF 18

RELEASE DATE 12/10/09

DWG. NO.	SH.	REV

REVISIONS

REV	DESCRIPTION	DATE	APPROVED
B	UPDATED: ADDED 2.5V POWER TO JTAG CONNECTOR. CORRECTED NI CONNECTOR (J1) PINOUT		

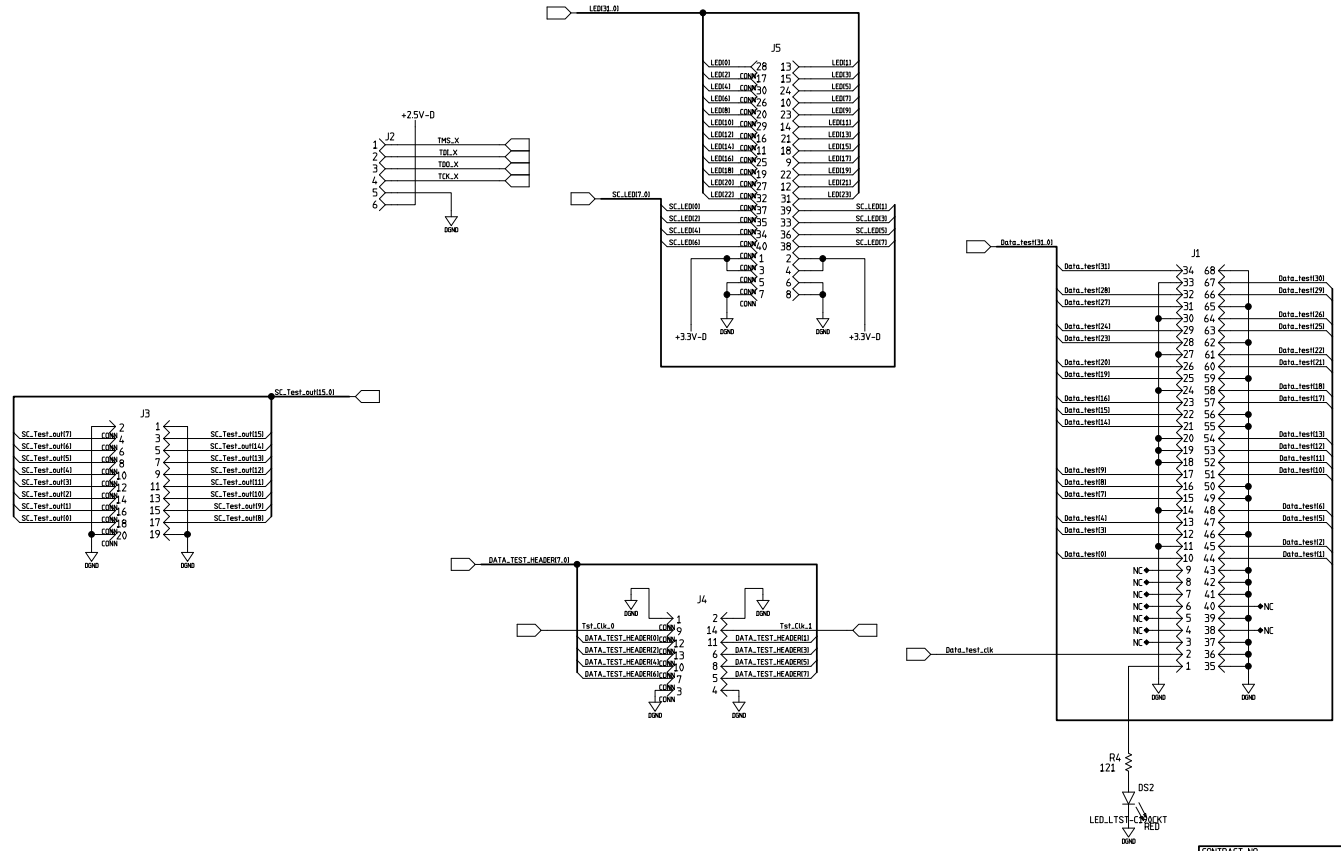

REVISED 3/16/10

CONTRACT NO.		
APPROVALS	DATE	FVTX Front End Module VME Form Factor
DRAWN M. Prokop	12/10/09	
CHECKED M. Prokop	12/10/09	
ISSUED M. Prokop	12/10/09	

SIZE	FSCM NO.	DWG. NO.	REV
D		126Y-267961	B
SCALE		SHEET 15 of 19	

H=BND: V=4LA

DWG. NO.	SH.	REV

REVISIONS

REV	DESCRIPTION	DATE	APPROVED
B	UPDATED: CHANGED DCM PART FROM TLK2711 TO TLK2501. ADDED ASSOCIATED PARTS AND CHANGED SIGNAL NAMES		

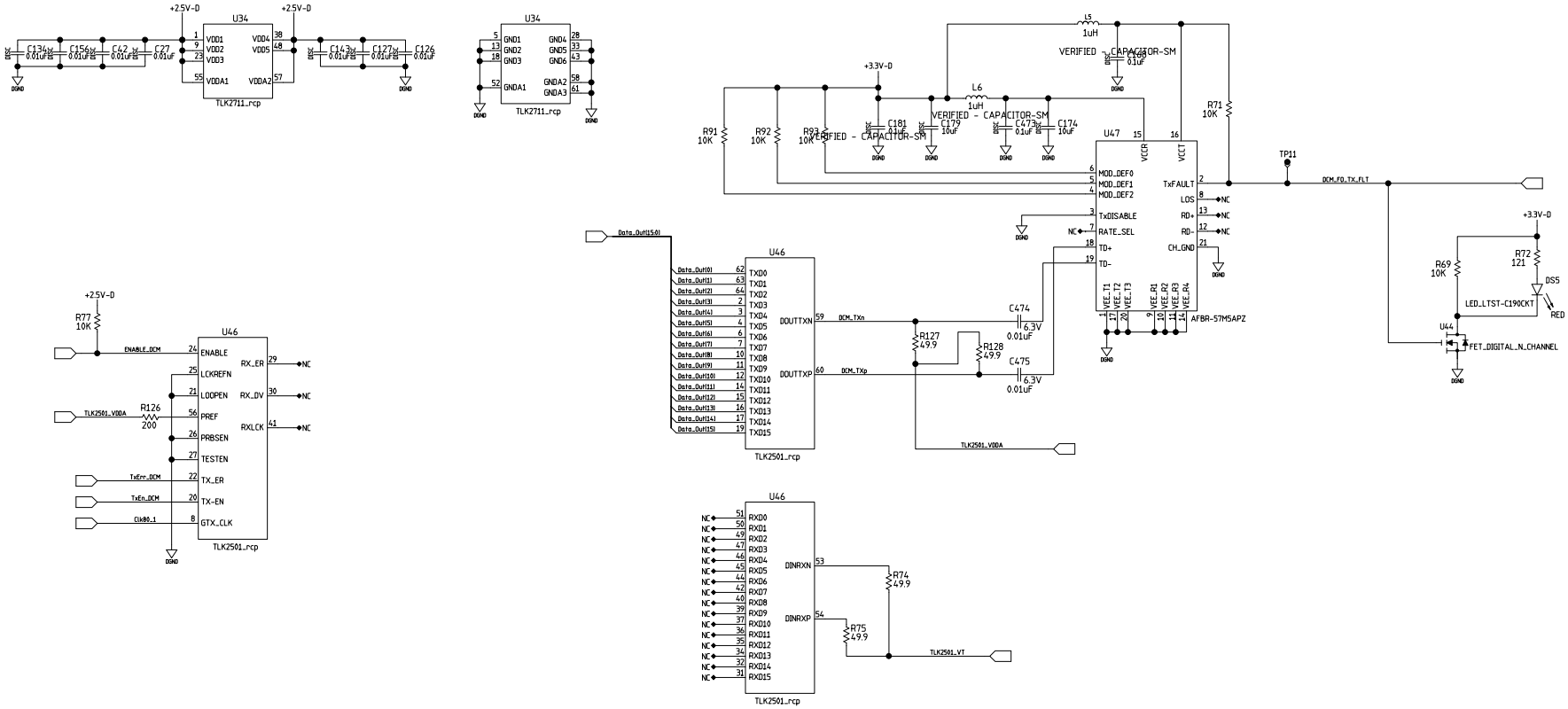

REVISED 3/17/10

CONTRACT NO.			
APPROVALS		DATE	FVTX Front End Module VME Form Factor
DRAWN	M. Prokop	12/10/09	
CHECKED	M. Prokop	12/10/09	
ISSUED	M. Prokop	12/10/09	

SIZE	FSCM NO.	DWG. NO.	REV
D		126Y-267961	B
SCALE		SHEET 16 of 19	

H=BND: V=4LA

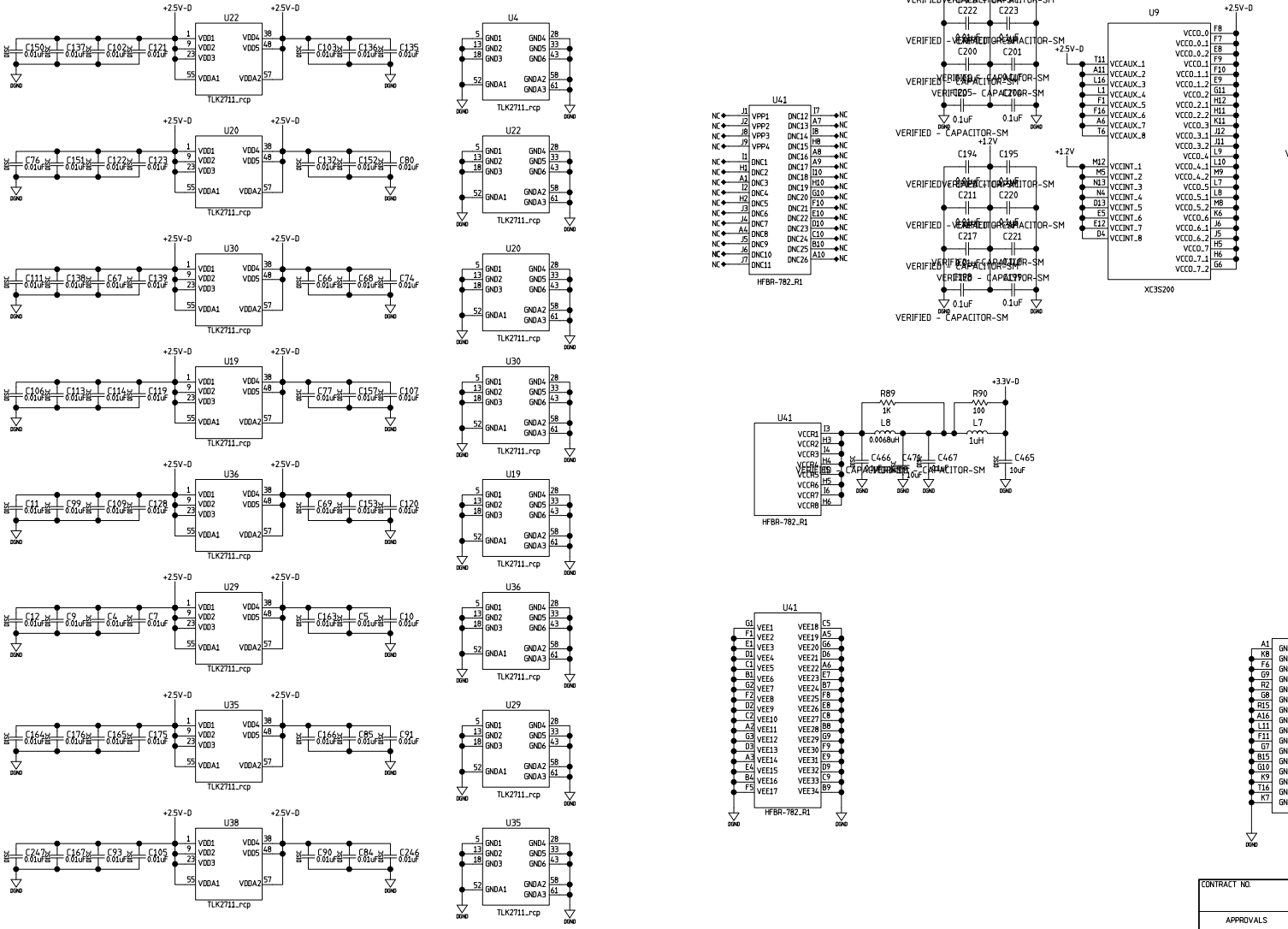

DWG. NO.	SH.	REV

REVISIONS

REV	DESCRIPTION	DATE	APPROVED

CONTRACT NO.		
APPROVALS		DATE
DRAWN	M. Prokop	12/10/09
CHECKED	M. Prokop	12/10/09
ISSUED	M. Prokop	12/10/09

FVTX Front End Module
VME Form Factor

SIZE	FSCM NO.	DWG. NO.	REV
D		126Y-267961	
SCALE		SHEET 17 of 19	

RELEASE DATE 12/10/09

H=BND: V=4LA

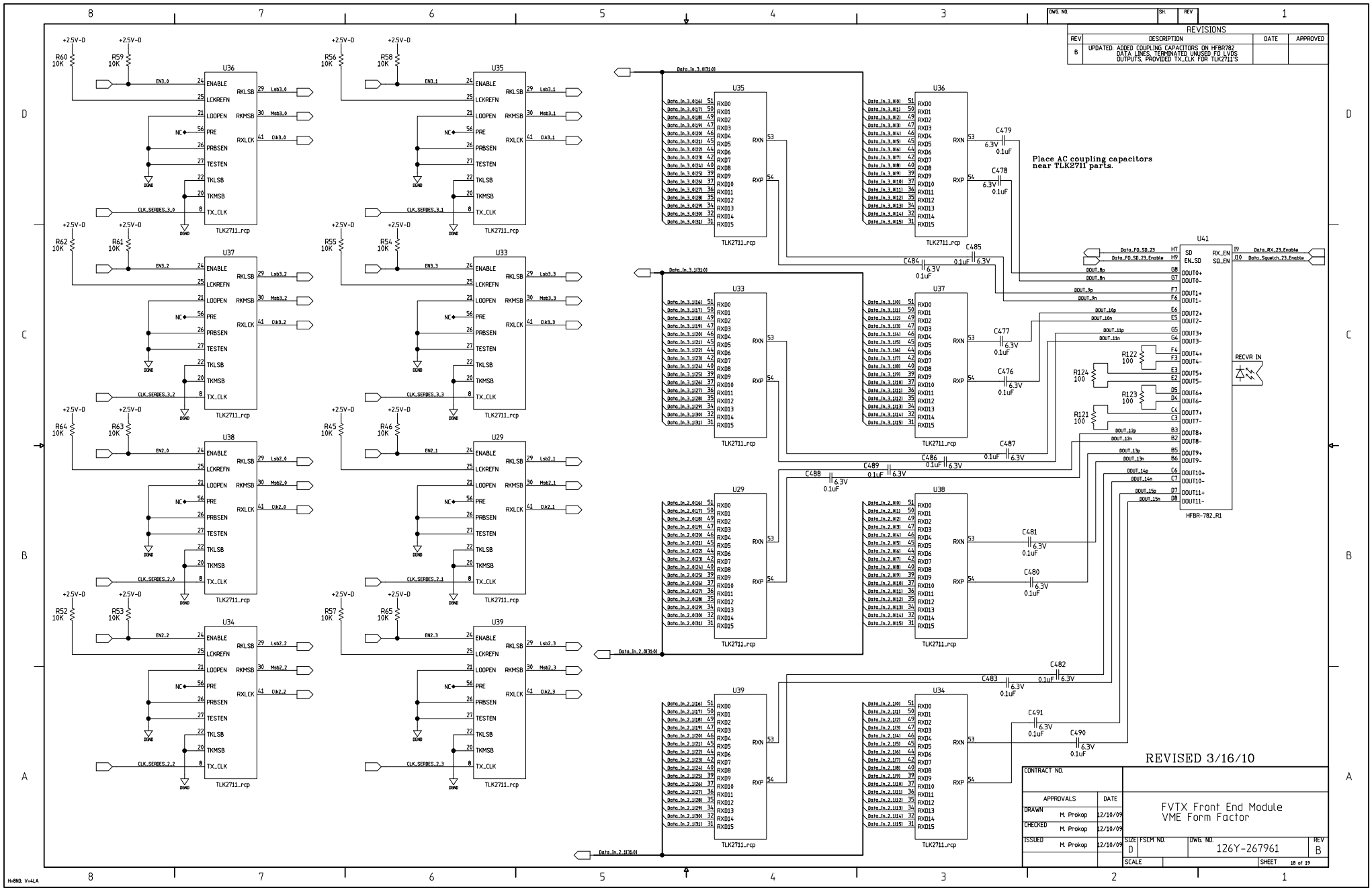
REVISIONS
REV | DESCRIPTION | DATE | APPROVED
B | UPDATED: ADDED COUPLING CAPACITORS ON HFBR782 DATA LINES. TERMINATED UNUSED FO LVDS OUTPUTS. PROVIDED TX_CLK FOR TLK2711'S
Place AC coupling capacitors near TLK2711 parts.
REVISED 3/16/10
CONTRACT NO.
APPROVALS | DATE
DRAWN M. Prokop 12/10/09
CHECKED M. Prokop 12/10/09
ISSUED M. Prokop 12/10/09
FVTX Front End Module
VME Form Factor
SIZE D | FSCM NO. | DWG. NO. 126Y-267961 | REV B
SCALE | SHEET 18 of 19
U41
HFBR-782_R1
RECVR IN
TLK2711_rcp

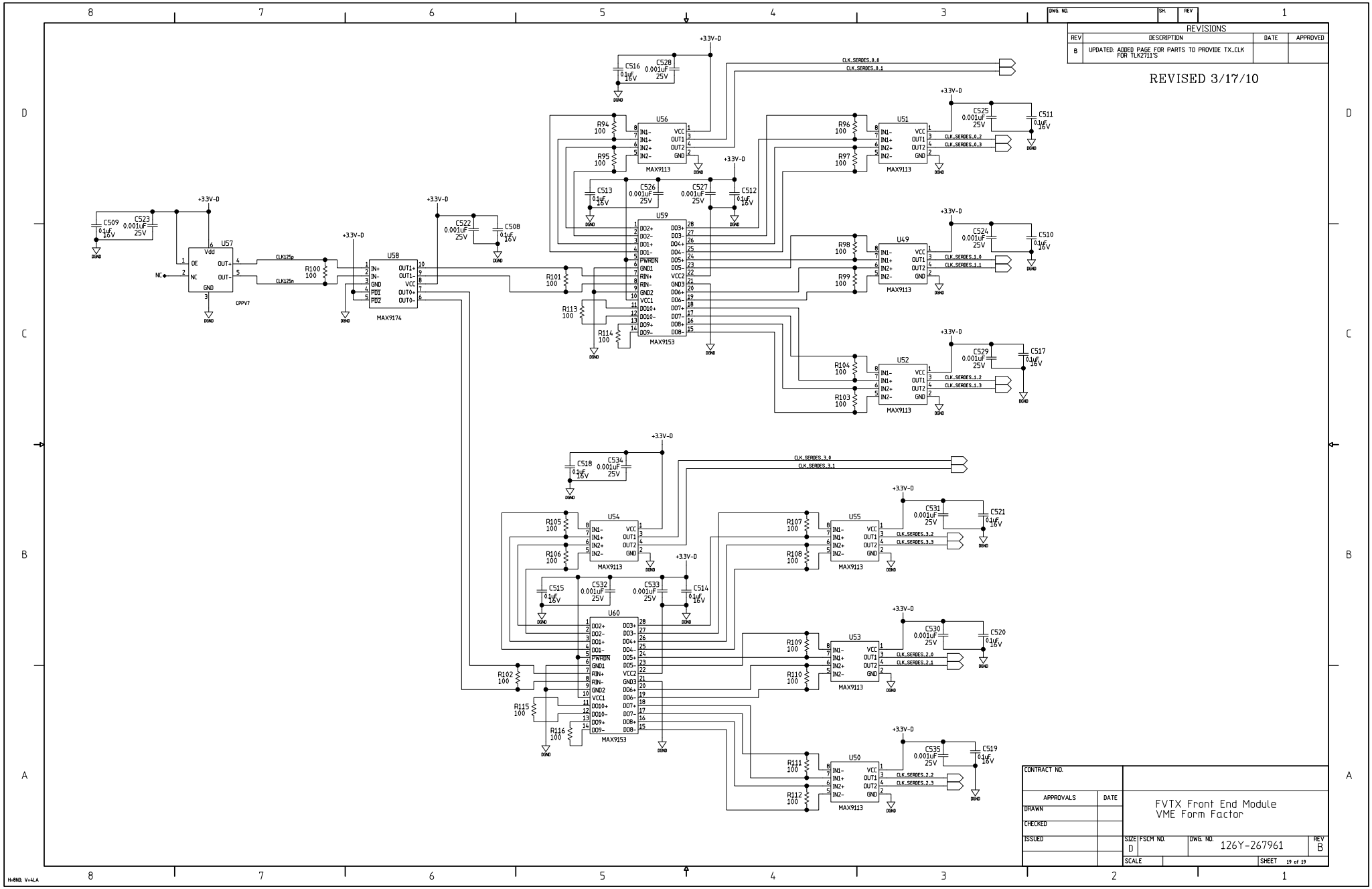
DWG. NO.
SH.
REV
REVISIONS
REV
DESCRIPTION
DATE
APPROVED
B
UPDATED: ADDED PAGE FOR PARTS TO PROVIDE TX_CLK FOR TLK2711'S
REVISED 3/17/10
U56
MAX9113
U51
MAX9113
U59
MAX9153
U49
MAX9113
U52
MAX9113
U57
CPPV7
U58
MAX9174
U54
MAX9113
U55
MAX9113
U60
MAX9153
U53
MAX9113
U50
MAX9113
CLK.SERDES.0.0
CLK.SERDES.0.1
CLK.SERDES.0.2
CLK.SERDES.0.3
CLK.SERDES.1.0
CLK.SERDES.1.1
CLK.SERDES.1.2
CLK.SERDES.1.3
CLK.SERDES.3.0
CLK.SERDES.3.1
CLK.SERDES.3.2
CLK.SERDES.3.3
CLK.SERDES.2.0
CLK.SERDES.2.1
CLK.SERDES.2.2
CLK.SERDES.2.3
CLK125p
CLK125n
+3.3V-D
DGND
CONTRACT NO.
APPROVALS
DATE
DRAWN
CHECKED
ISSUED
FVTX Front End Module
VME Form Factor
SIZE
D
FSCM NO.
DWG. NO.
126Y-267961
REV
B
SCALE
SHEET 19 of 19
H+BND: V+4LA