ITEM NUMBER	NUMBER REQD	DESCRIPTION

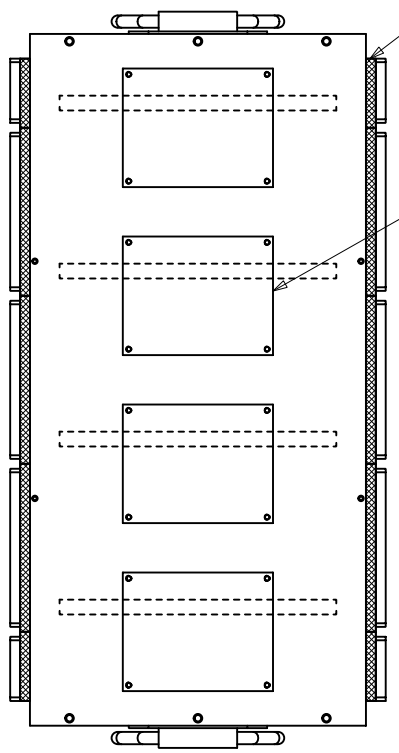

CONDUCTIVE ESD FOAM, BLACK CLOSED CELL, INSTALLED BY USER SEE INSTRUCTIONS SH B11

EXISTING TERMINAL CARD- USE WITH 3/16" SPACERS

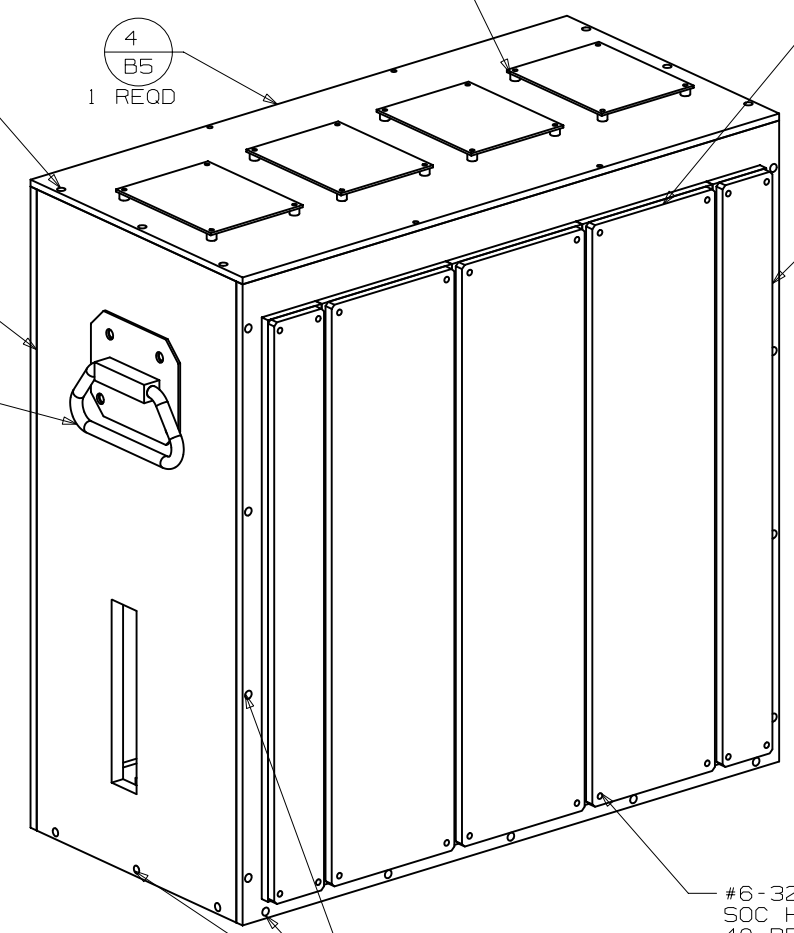

#6-32UNC X .50 LG SOC HD CAP SCREWS 16 REQD

4/B5 1 REQD

6/B7 6 REQD

#10-32UNF X .62 LG SOC HD CAP SCREWS REF

3/B4 2/B3 1 EA. REQD

7/B8 4 REQD

CHEST HANDLE, 2 REQD NATIONAL #N117-002, MOUNT W/ .25-20UNC X .50 LG HEX HD SCREW, 8 REQD

#6-32UNC X .62 LG SOC HD CAP SCREWS 40 REQD

#10-32UNF X .62 LG SOC HD CAP SCREWS 38 REQD

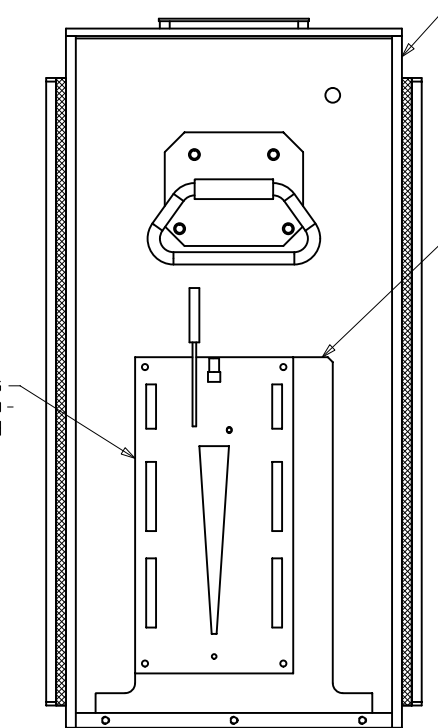

5/B6 2 REQD

8/B9 3 REQD

EXISTING HDI CARD- USE WITH 3/16" SPACERS

ITEM 2 (BOX END) REMOVED FROM THIS VIEW FOR CLARITY

1/B2 1 REQD

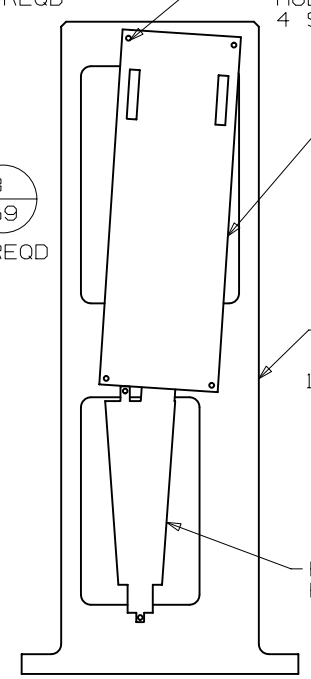

#6-32UNC X 1.0 LG SOC HD SCR, WASHERS & NUTS, OVERSIZE HOLES FOR ALIGNMENT 4 SETS REQD

EXISTING PCB CARD- USE WITH SPACERS

9/B10 1 REQD

EXISTING HDI/KAPTON CARD

CLASSIFICATION: DRAWING:	PART:	TITLE BLOCK:	
	SIGNATURE	DATE	GROUP
ORIG			
DRAWN	CLARK	6/09	P-25
CHECKED			
PROJ ENGR			
APPROVED			
RELEASED			

REV	CLASS REVIEW	REVISIONS	DATE	CHANGED BY	CHECKED BY	APPROVED BY
—		ORIGINAL ISSUE	—	—	—	—

LOS ALAMOS

LOS ALAMOS NATIONAL LABORATORY
LOS ALAMOS, NEW MEXICO, 87545

TOLERANCE-(UNLESS OTHERWISE NOTED)
X=±_____ 0.XX =±_____ ANG=±_____
.X=±_____ 0.XXX=±_____ FIN= _____

TITLE
PHENIX

FVTX DETECTOR TEST BOX

SCALE	TOTAL SHEETS	DRAWING NO.	SIZE	NO.
NONE		126Y-1766566	C	1