NOTE-

1. BREAK ALL EDGES .03 NOM.

ITEM NUMBER	NUMBER REQD	DESCRIPTION

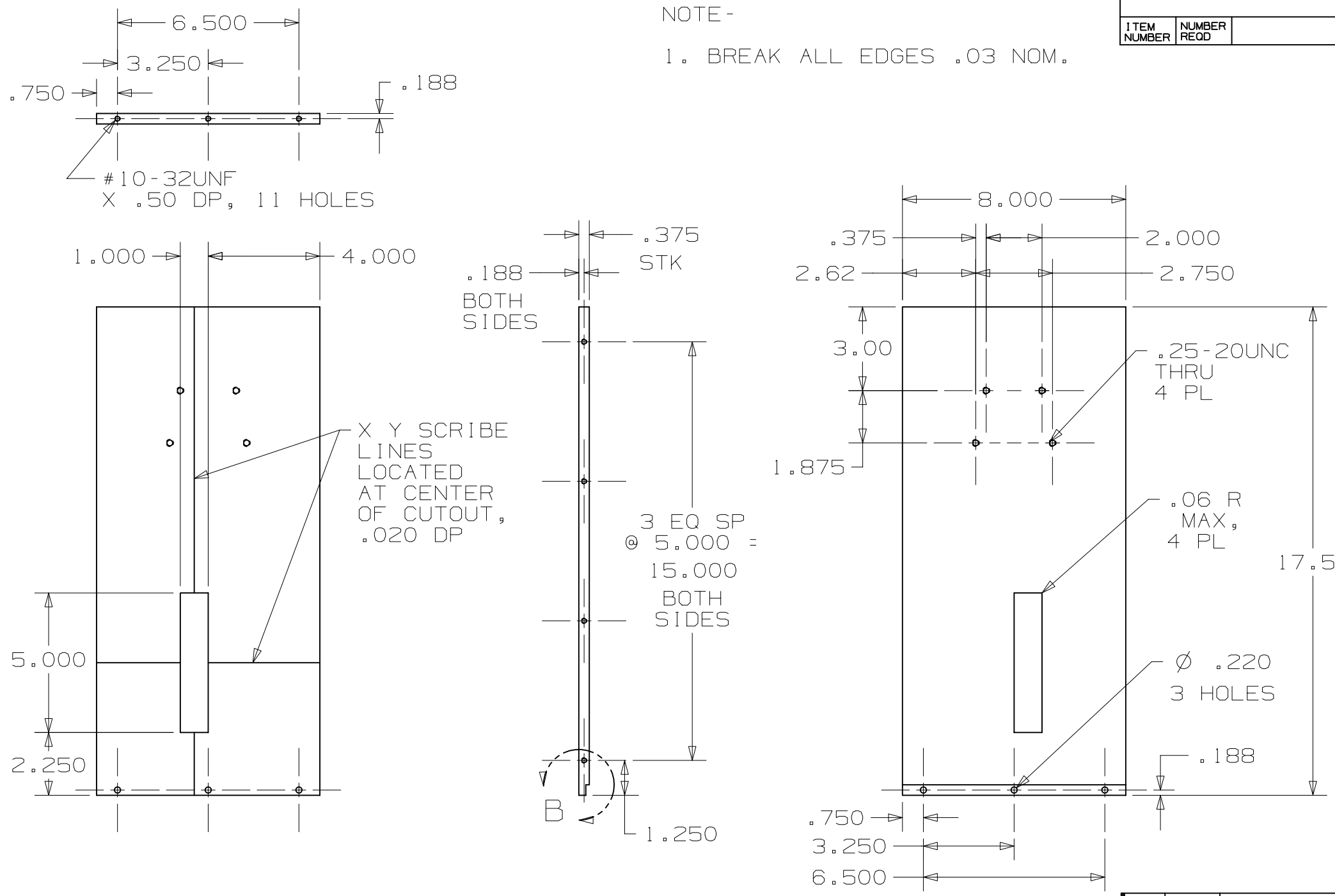

3 TEST BOX END L

MATL- ALUM 6061-T6
OR EQUAL

NO REQD -1

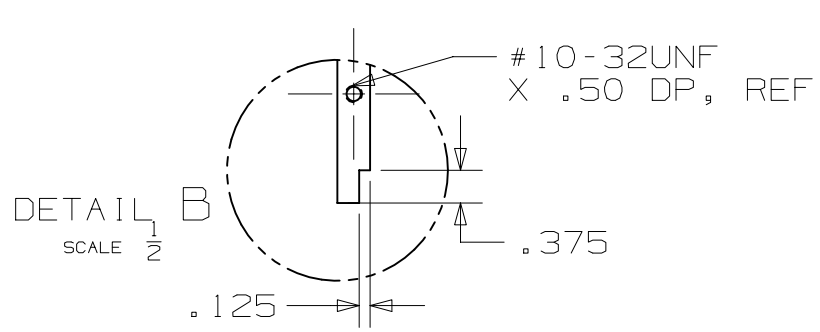

CLASSIFICATION:

DRAWING: PART: TITLE BLOCK:

	SIGNATURE	DATE	GROUP
ORIG			
DRAWN	CLARK	6/09	P-25
CHECKED			
PROJ ENGR			
APPROVED			
RELEASED			

REV	CLASS REVIEW	REVISIONS	DATE	CHANGED BY	CHECKED BY	APPROVED BY
—		ORIGINAL ISSUE	—	—	—	—

LOS ALAMOS

LOS ALAMOS NATIONAL LABORATORY
LOS ALAMOS, NEW MEXICO, 87545

TOLERANCE-(UNLESS OTHERWISE NOTED)
X=± 0.XX =± .02 ANG=±
.X=± 0.XXX=± .005 FIN=

TITLE PHENIX

FVTX DETECTOR
TEST BOX END R

SCALE	TOTAL SHEETS	DRAWING NO.	SIZE	NO.
.25		126Y-1766566	B	4