TopSPICE Schematic – spartanfiber.sch

File Edit Draw Subcircuit View Options Analysis Tools Help

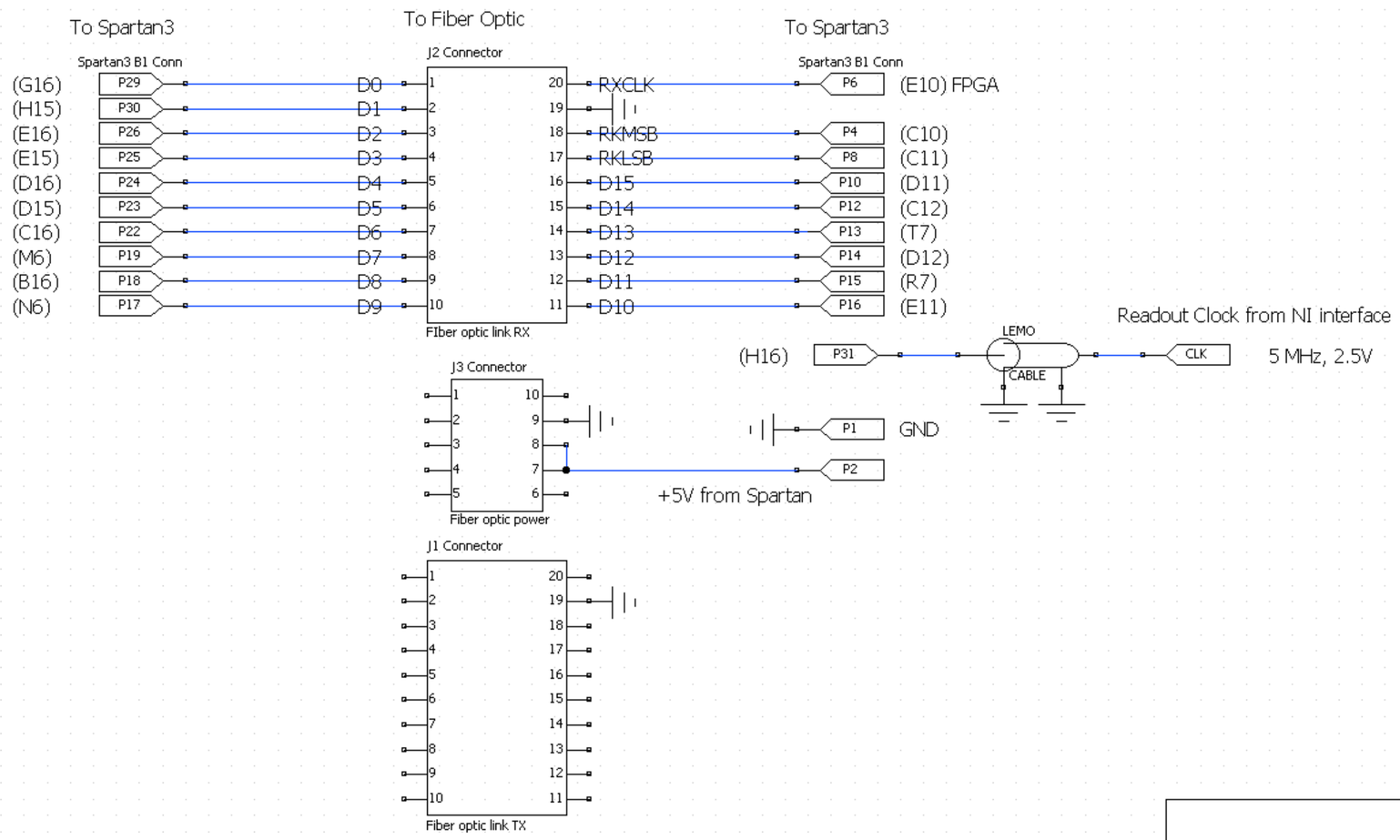

Spartan 3 to Fiber Optic Interface		
Size: A	No:	Rev: 2
Sheet: 1 of 1		Revised: 30-Nov-2009
Drawn by:		Created: 30-Nov-2009
File: c:\windows\profiles\plm\desktop\spartanfiber.sch		

1.55:B, 3.85 | Spartan 3 to Fiber Optic Interface | Edit | Sheet 1 of 1