ExpressPCB – C:\windows\profiles\plm\Desktop\SpartanFiber4.pcb

File Edit View Component Layout Help

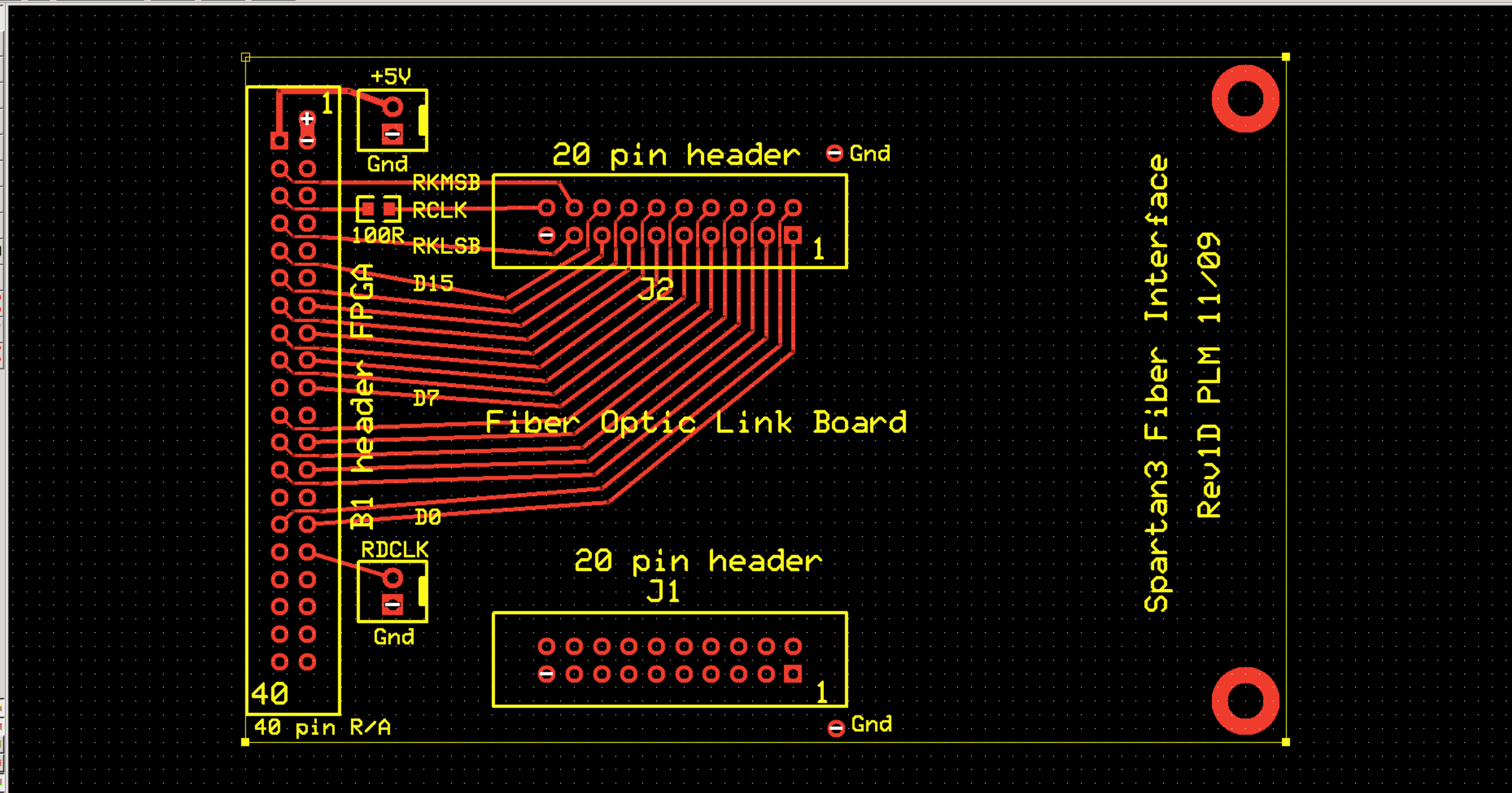

X: -1.325 Y: -1.412 Snap: 0.00625"