SPHENIX MECHANICAL

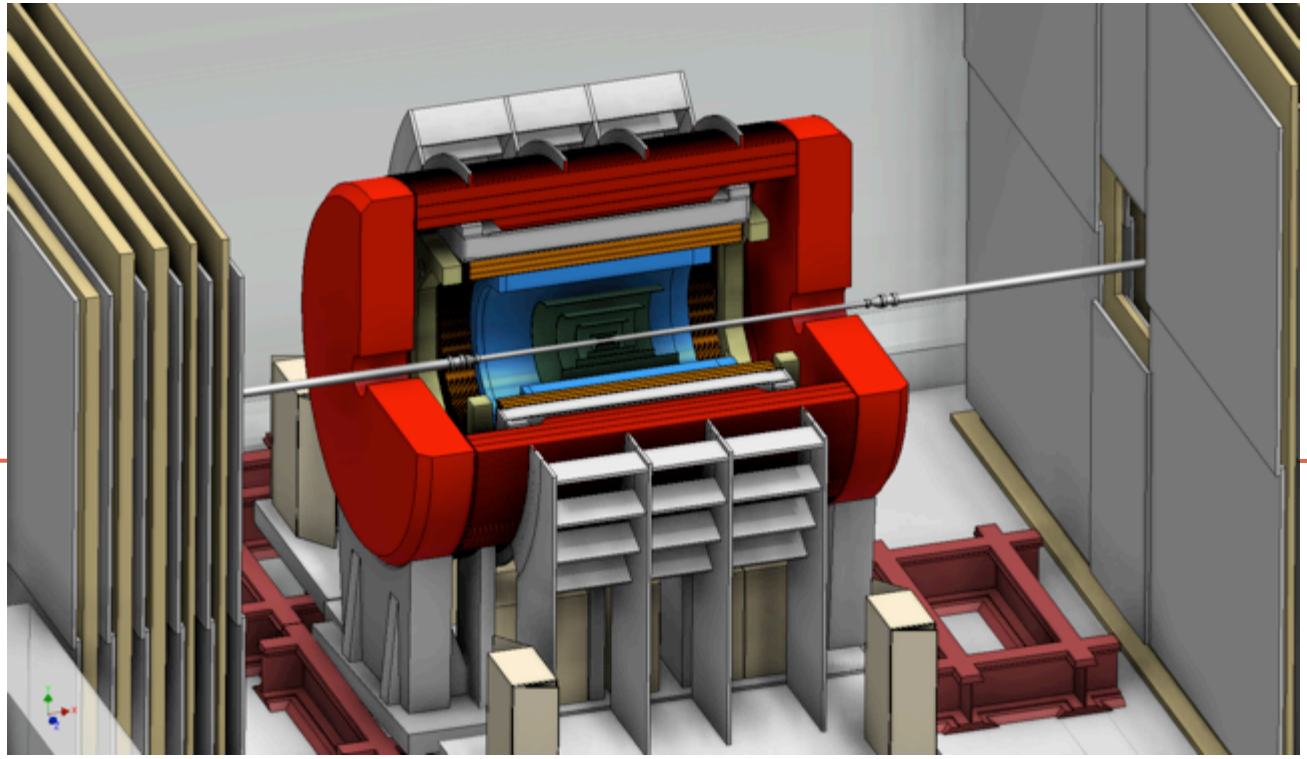

D. Lynch

September 11, 2014

AGENDA

- Global Design Concept – Updated
- Global Assembly Concept – Updated
- Inner HCal Installation concept (new, Anatoli)
- sPHENIX management, progress and schedule

sPHENIX Global Design Concept

- General Constraints
  - IR dimensions
  - Shield wall existing configuration
  - Existing tracks
  - MuID steel (assume all will remain)
  - Cooling Water
  - HVAC
  - Power
  - Access & Work platforms
  - Cryo Supply
  - Electronics Support
  - Vacuum/beampipe

sPHENIX Global Design Concept: Key dimensional constraints (Updated)

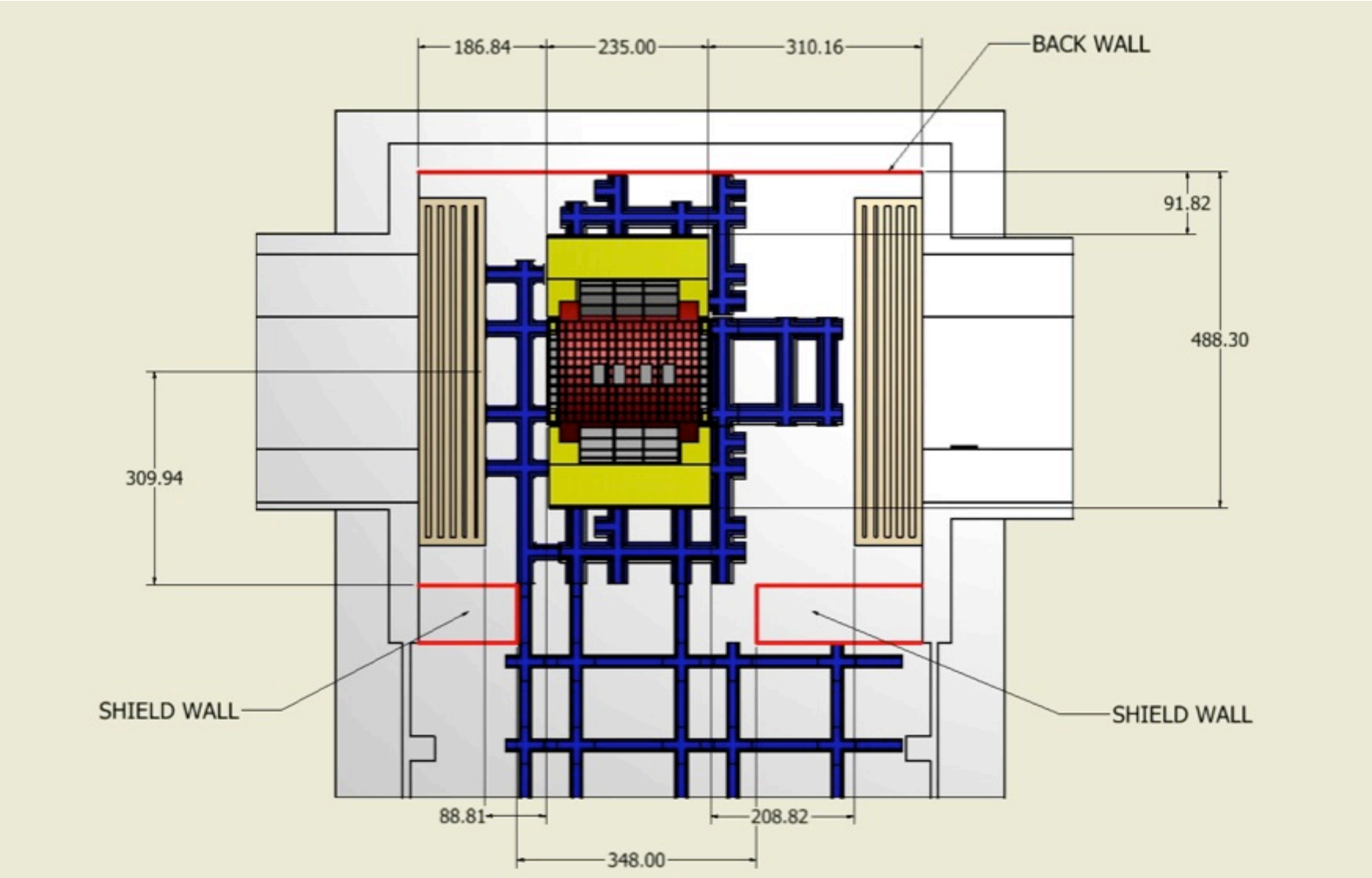

sPHENIX Global Design Concept: Key dimensional constraints

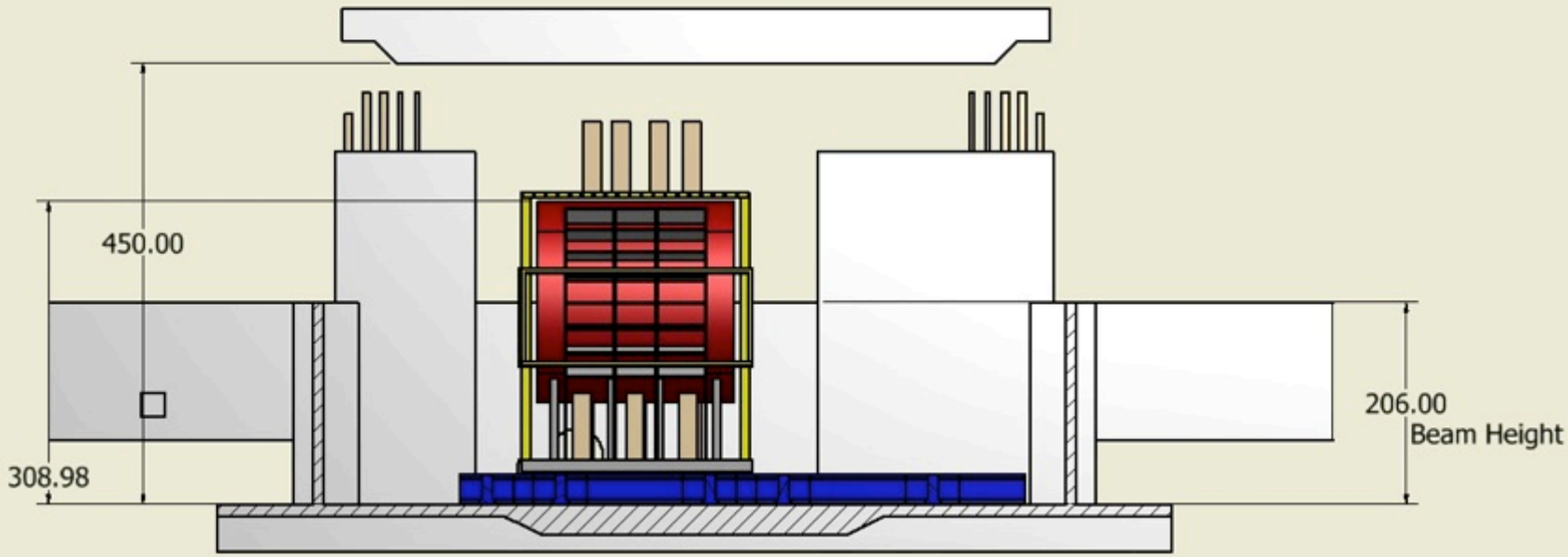

sPHENIX Global Design Concept

- SPHENIX Overall Detector Envelope
- sPHENIX Detector Individual Design Envelopes
  - Magnet
  - HCal Outer
  - HCal Inner
  - EMCal
  - Tracking (VTX)
  - Future Upgrades
  - Support Structure Envelope
- IR Services Envelope

EMCal

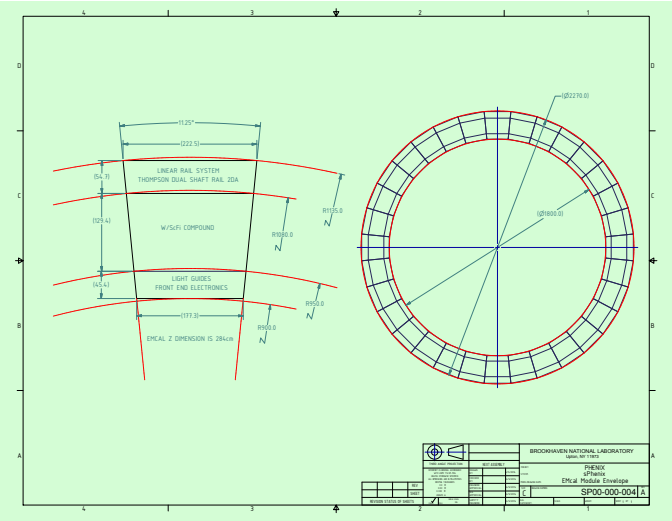

Magnet

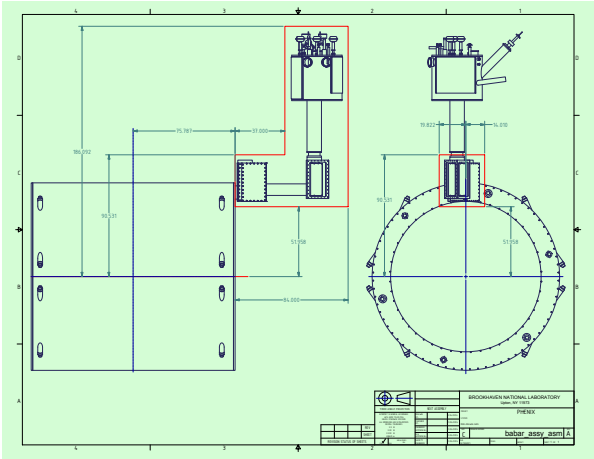

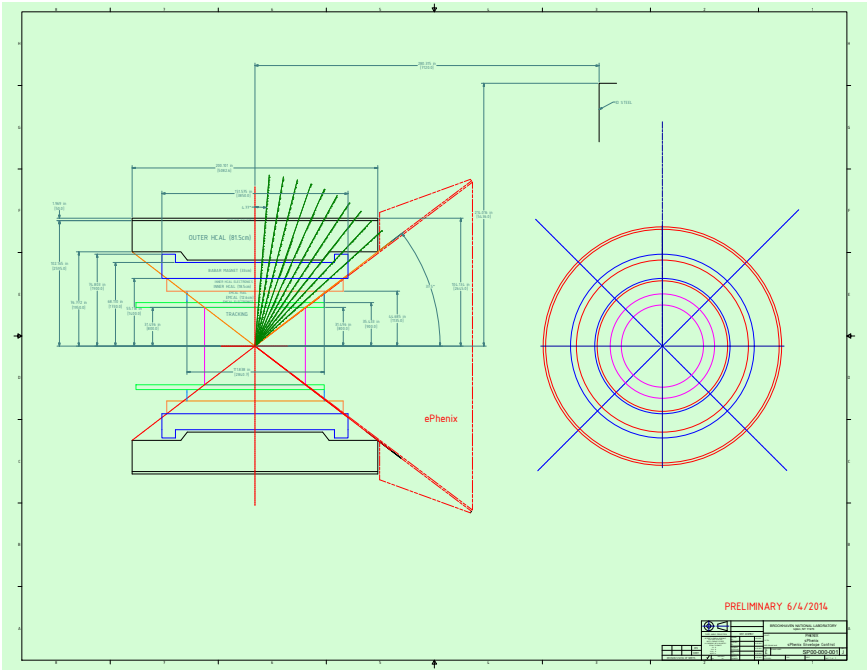

Overall Detector

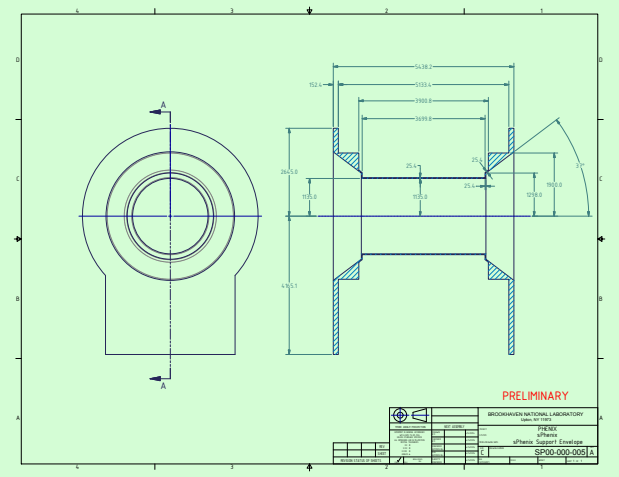

Detector Support Structure

sPHENIX Global Design Concept: Detector Structural Support

- External and Internal Support Structures
  - EC ?, WC ?, CP: ¼, ½, ¼ Outer HCAL ??
  - CP lower supports ¼ Outer HCAL lower and Magnet
  - HCal Inner supported by HCal Outer
  - EMCal supported by HCal Inner
  - Tracking (VTX) supported by <TBD>
  - Load transfer from CP to HCal Outer/Upper <TBD>
  - Bridge Platform above HCal Outer Upper supported from CP lower

Internal Support Concept

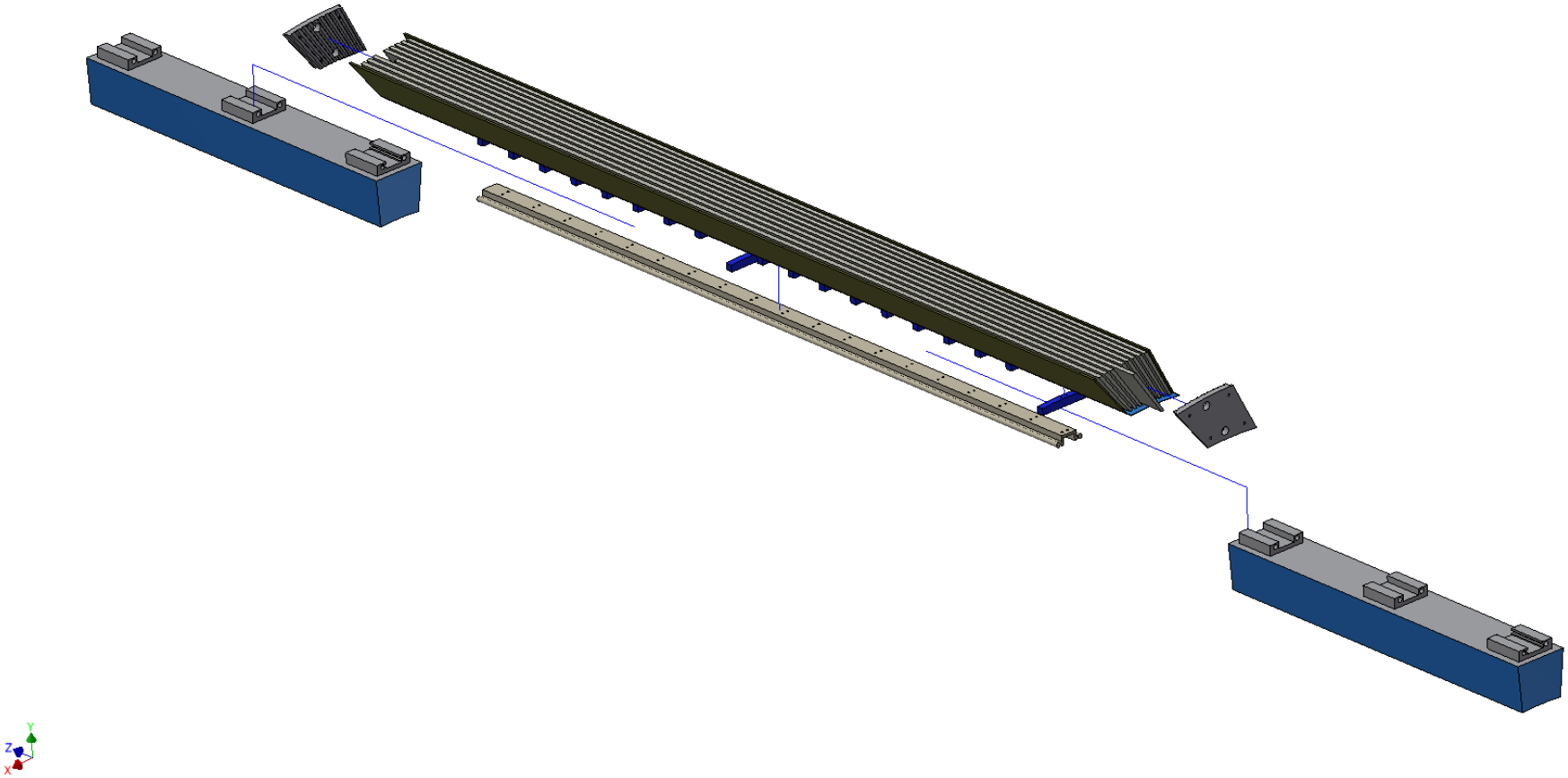

Internal Support Concept

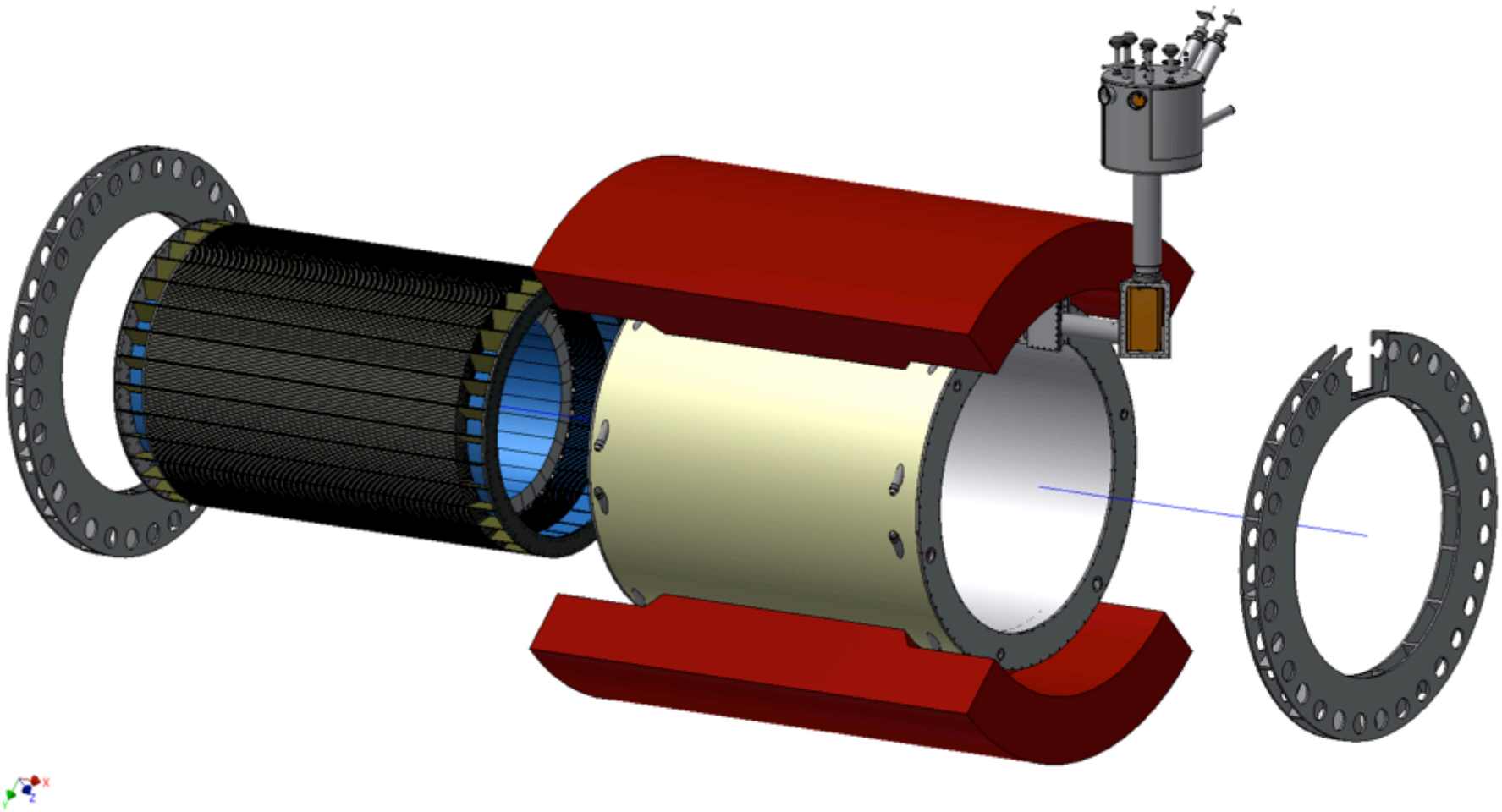

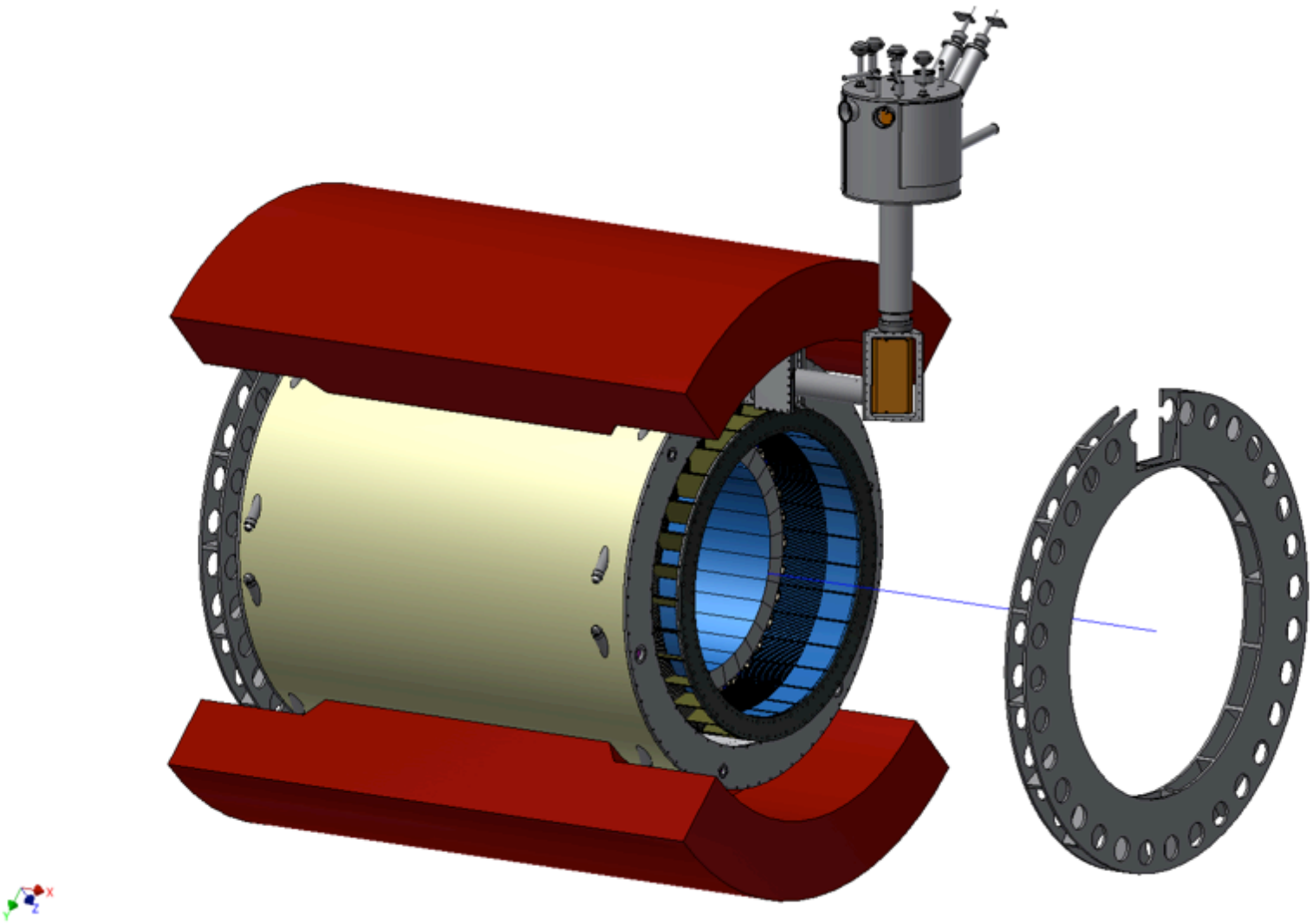

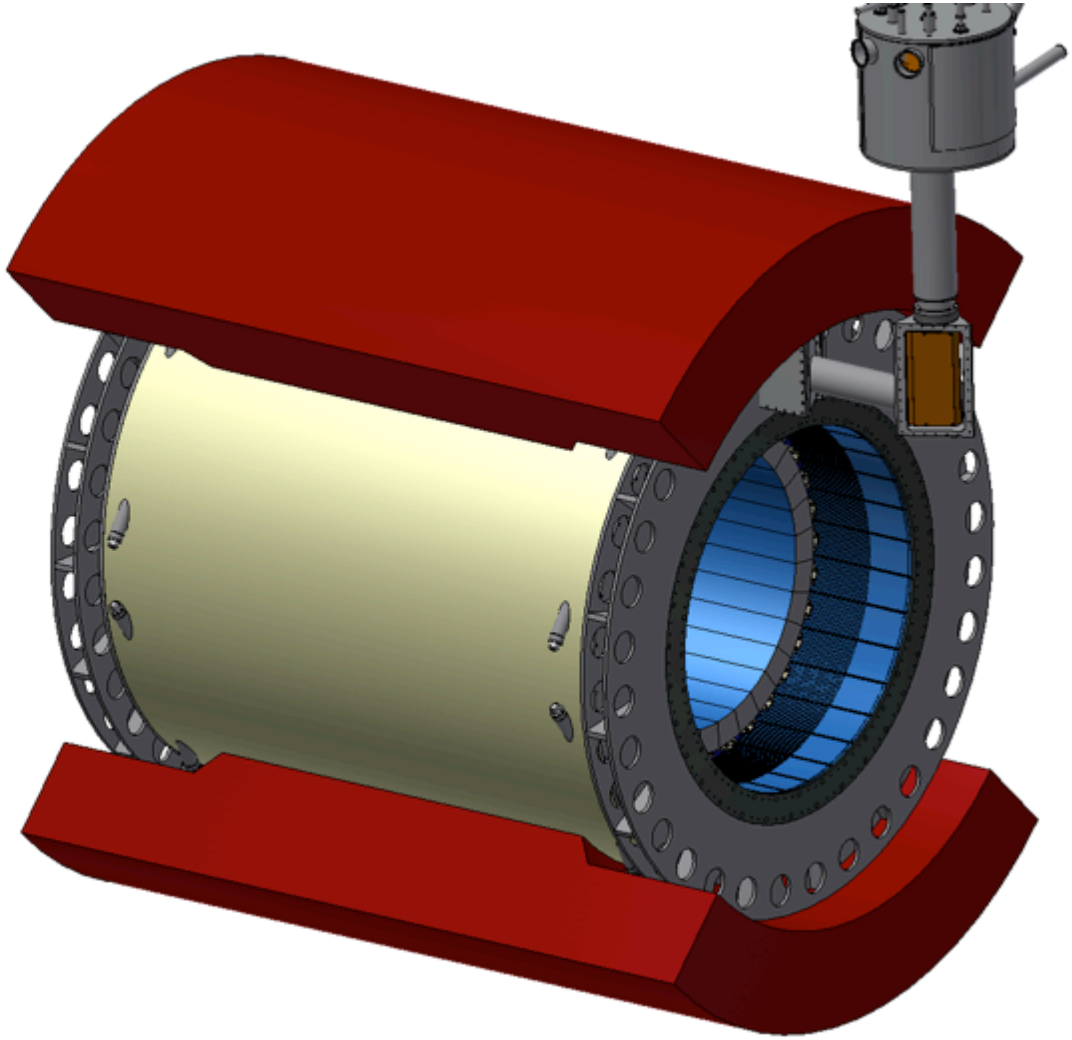

Internal Support Concept: Tracking

Tracking support concept is not yet illustrated. 2 – 4 light rails to support 2 “clamshell” half detectors. Detectors will separate transversely from tight around beampipe then each ½ will be extracted longitudinally.

sPHENIX INNER H-cal ASSEMBLY AND INSTALLATION

PROPOSAL. COMPLETE ASSEMLY AND INSTALLATION SCENE

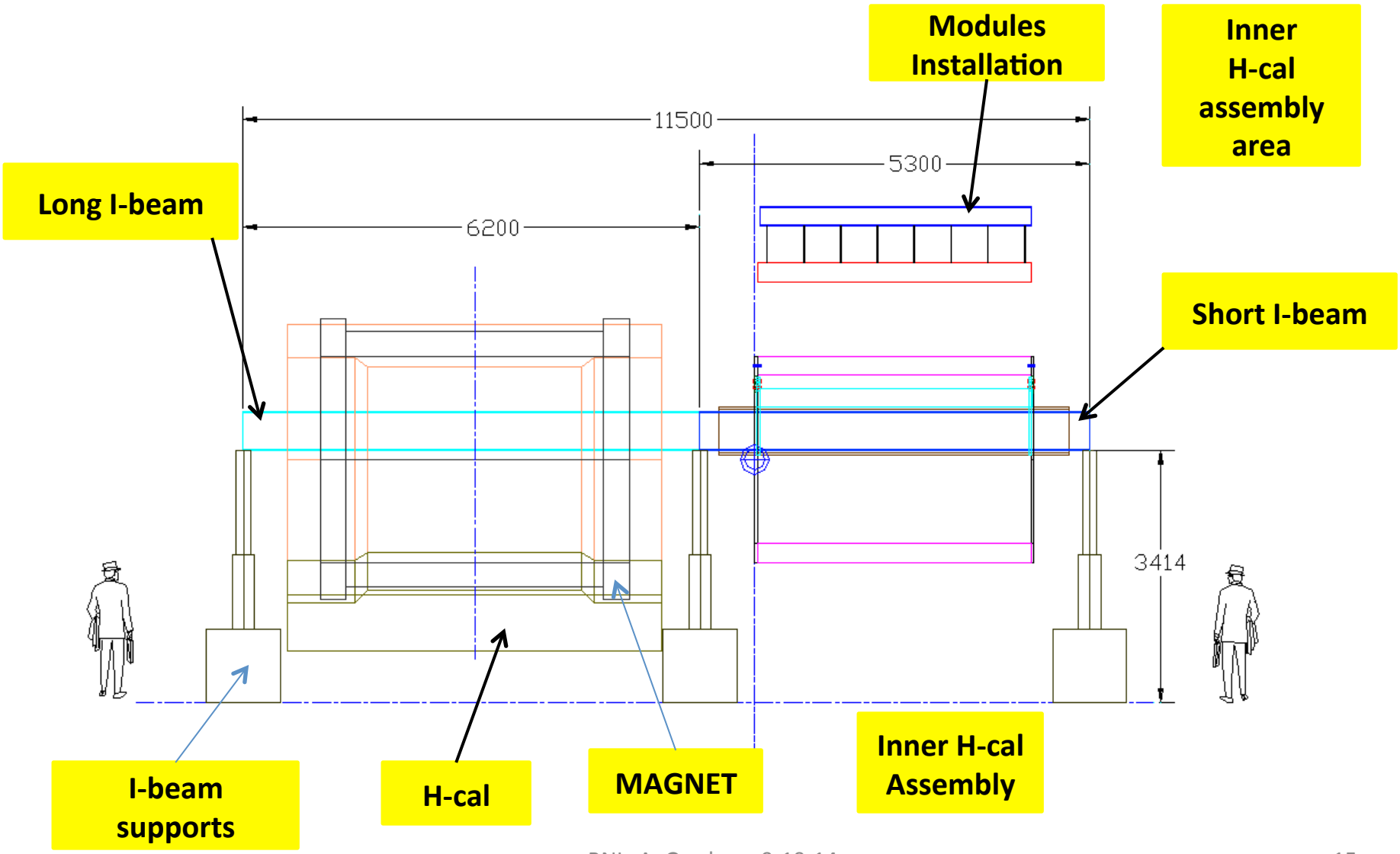

sPHENIX INNER H-cal ASSEMBLY AND INSTALLATION

PROPOSAL. Tooling . Assembly Cage

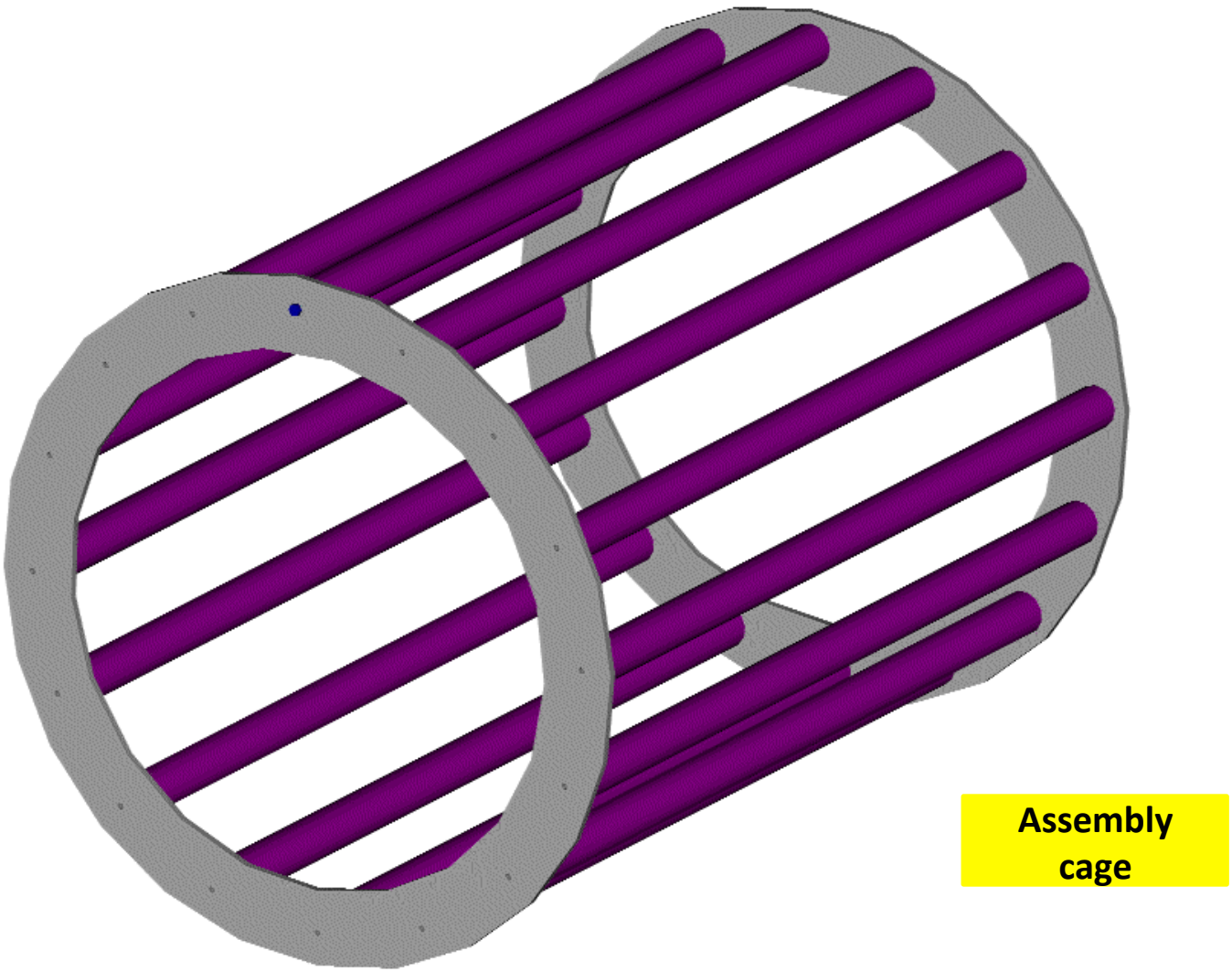

sPHENIX INNER H-cal ASSEMBLY AND INSTALLATION

PROPOSAL. Tooling . Assembly Cage

2 Flanges with
Outer R = 1400mm;
Inner R = 1135mm:
Separated by 3850mm
Connected together by
16 removable rods.

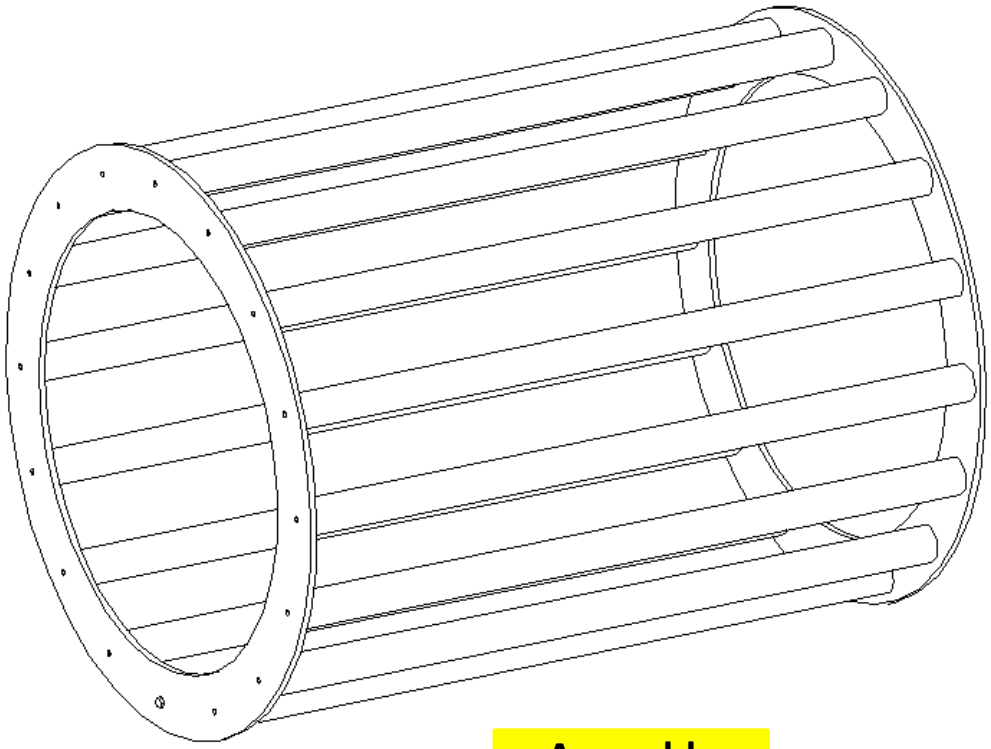

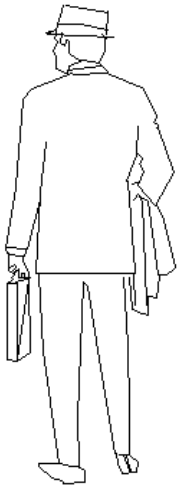

Assembly Cage

sPHENIX INNER H-cal ASSEMBLY AND INSTALLATION

PROPOSAL. Tooling . Assembly Cage + I-beam

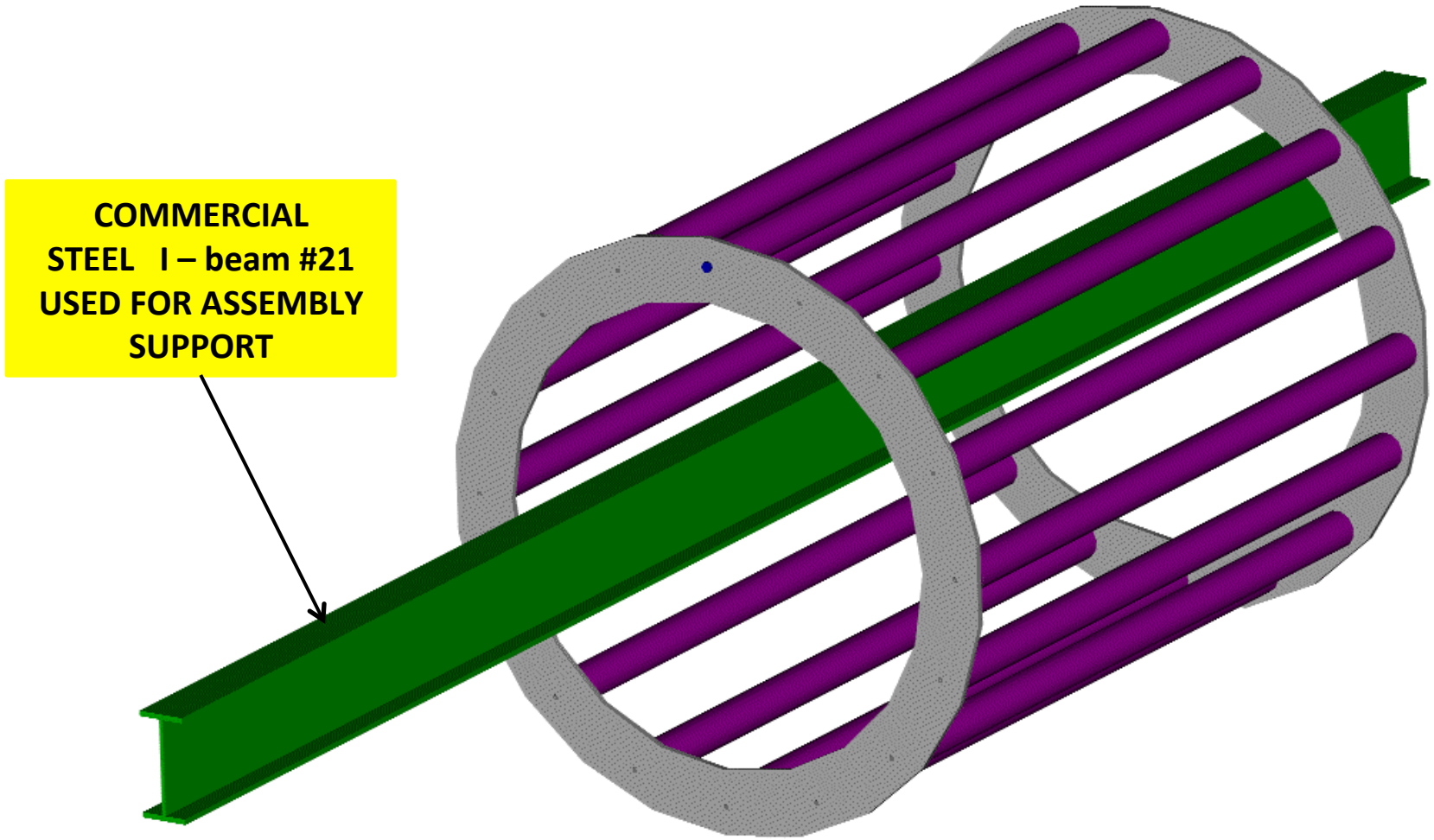

sPHENIX INNER H-cal ASSEMBLY AND INSTALLATION

PROPOSAL. I-beam position inside of assembly cage

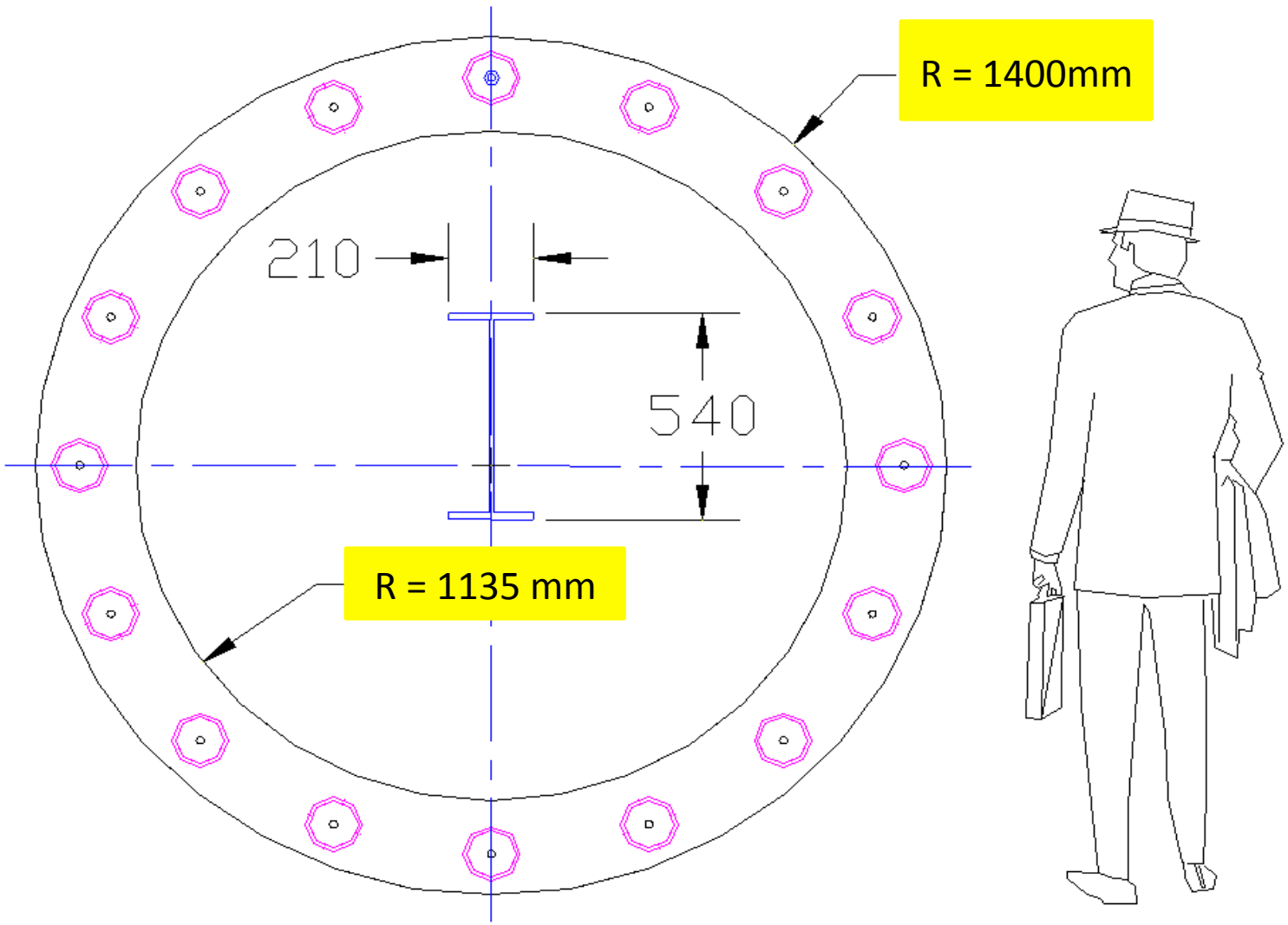

sPHENIX INNER H-cal ASSEMBLY AND INSTALLATION

PROPOSAL. Tooling . Transportation cart

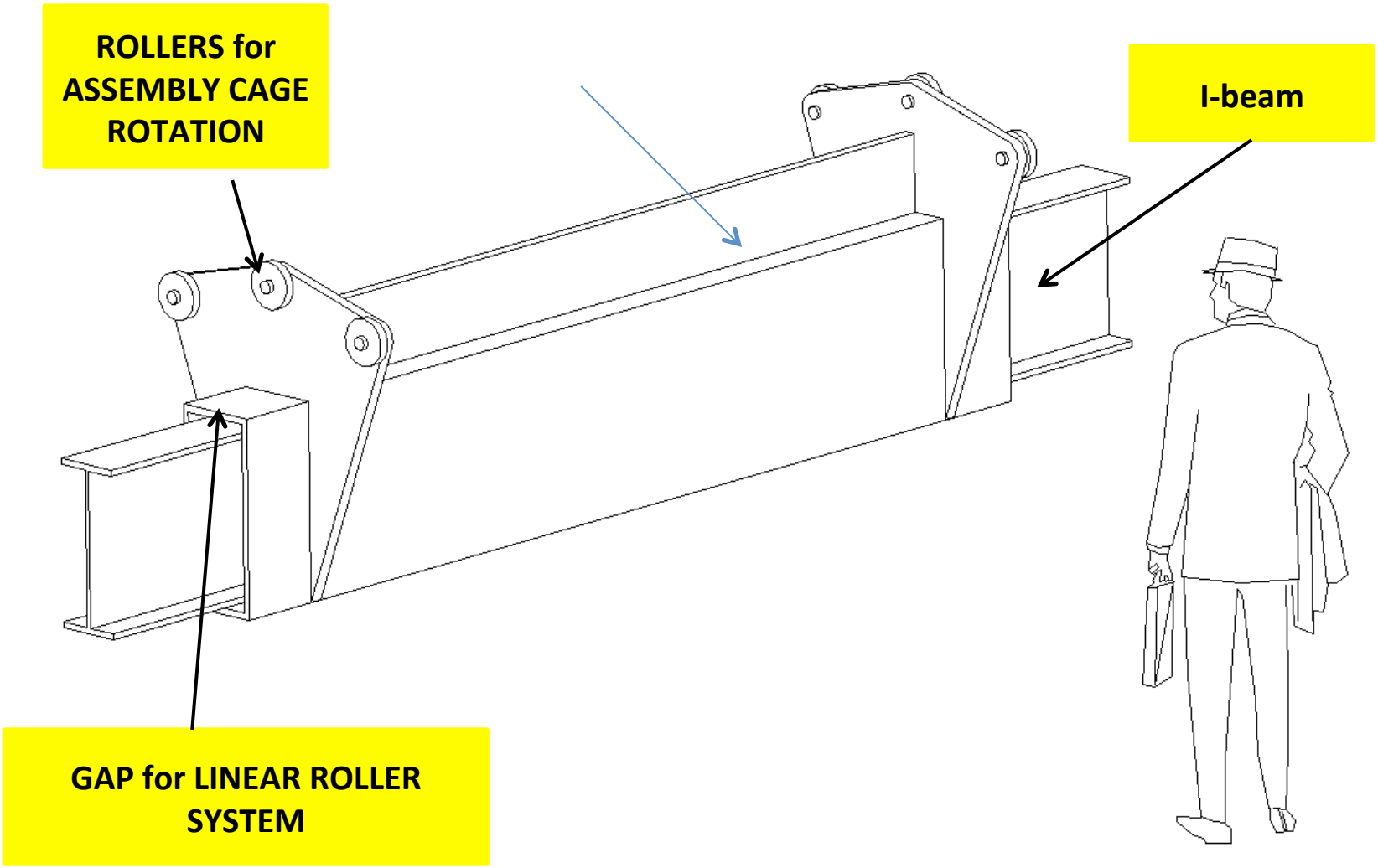

sPHENIX INNER H-cal ASSEMBLY AND INSTALLATION

PROPOSAL. Tooling . CAGE, Transportation cart and support beam

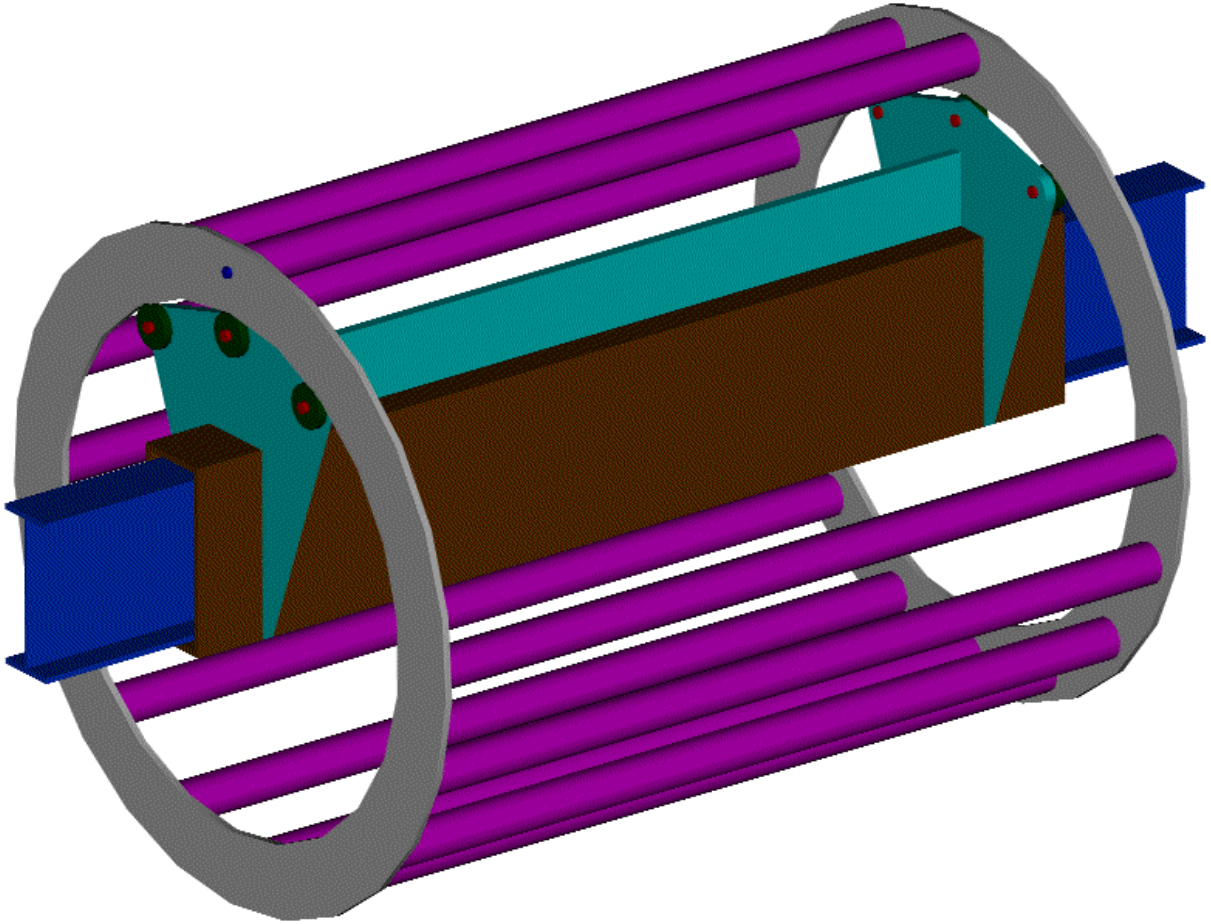

sPHENIX INNER H-cal ASSEMBLY AND INSTALLATION

PROPOSAL. Tooling . Transportation cart. MODULE INSTALLATION PROCEDURE

ROTATE CAGE FOR RIGHT POSITION

Modules ALWAYS loaded From top. REMOVE CAGE TMPORARY ROD, THEN NEEDED

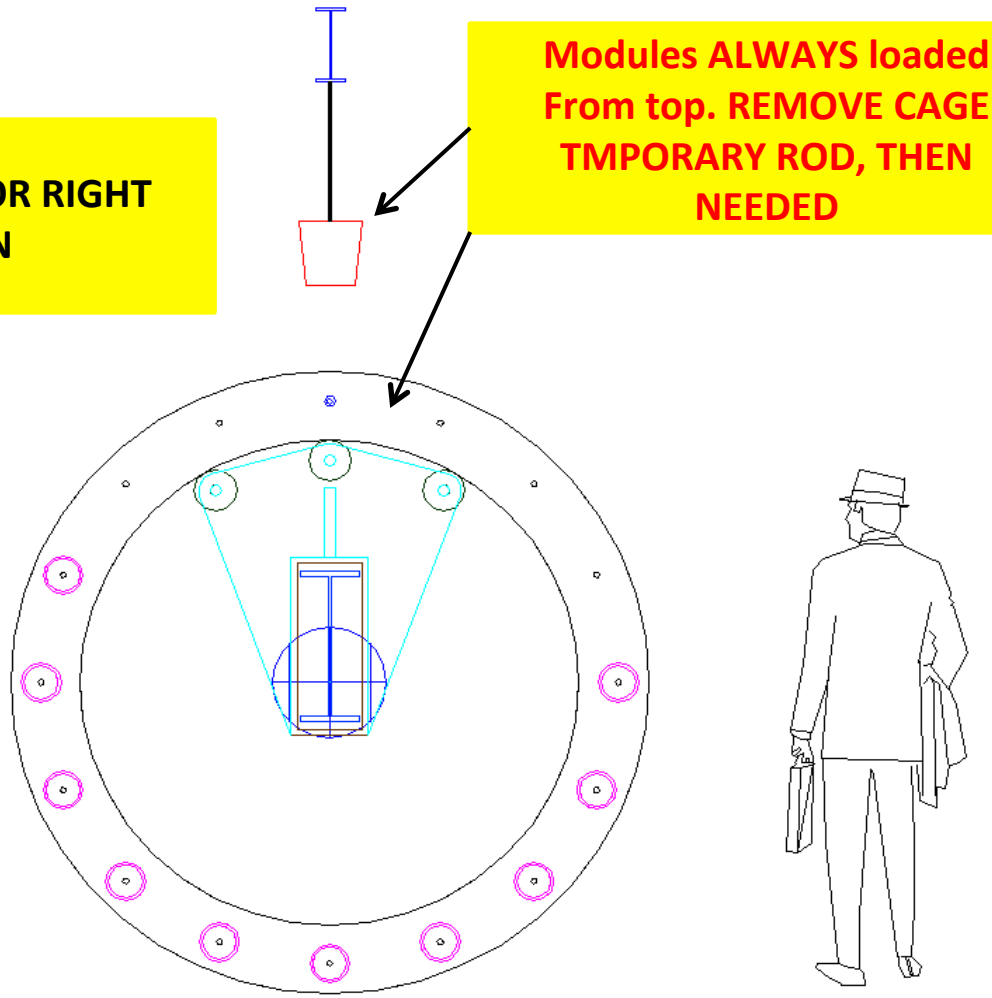

sPHENIX INNER H-cal ASSEMBLY AND INSTALLATION

PROPOSAL. Tooling . Transportation cart. MODULE INSTALLATION PROCEDURE

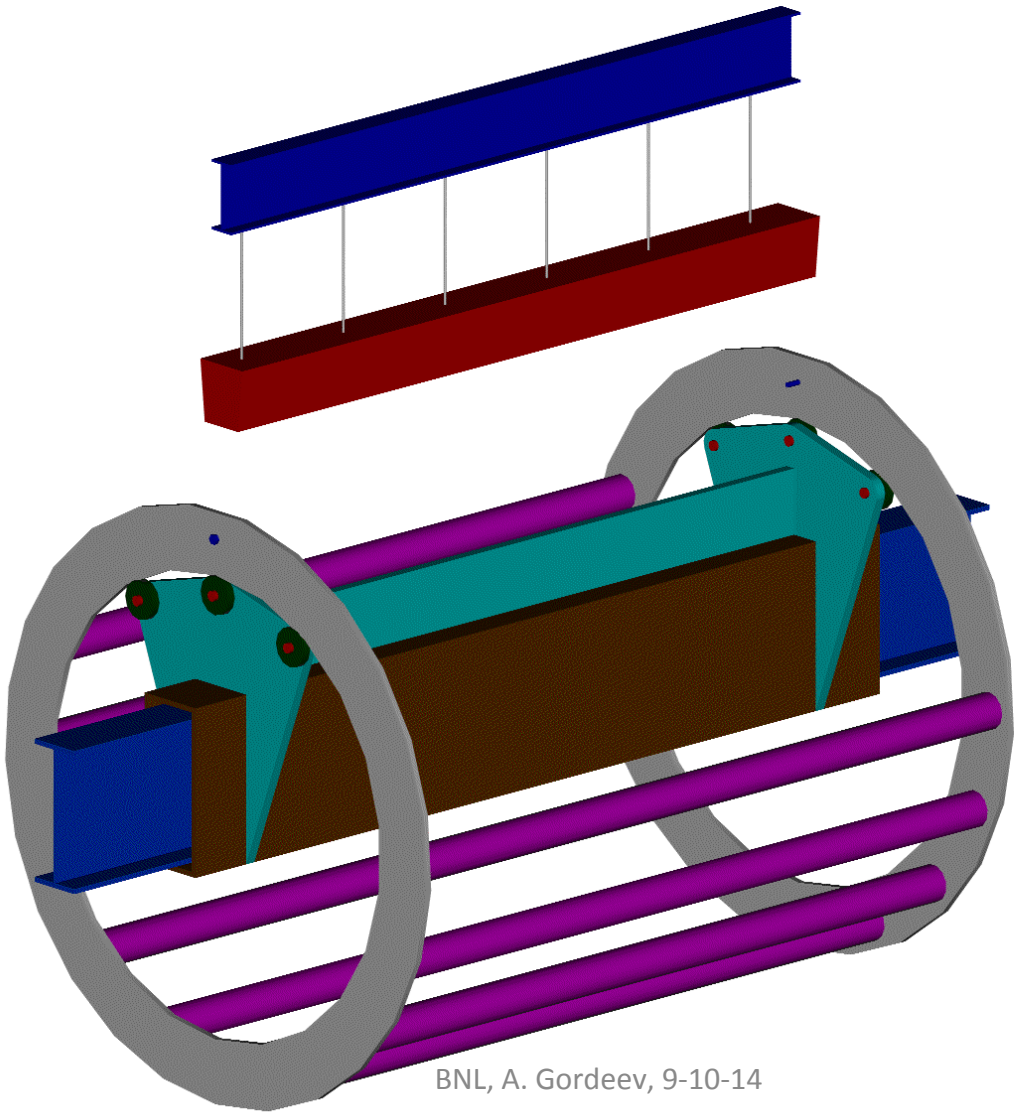

sPHENIX INNER H-cal ASSEMBLY AND INSTALLATION

PROPOSAL. Tooling . Transportation cart. MODULE INSTALLATION PROCEDURE

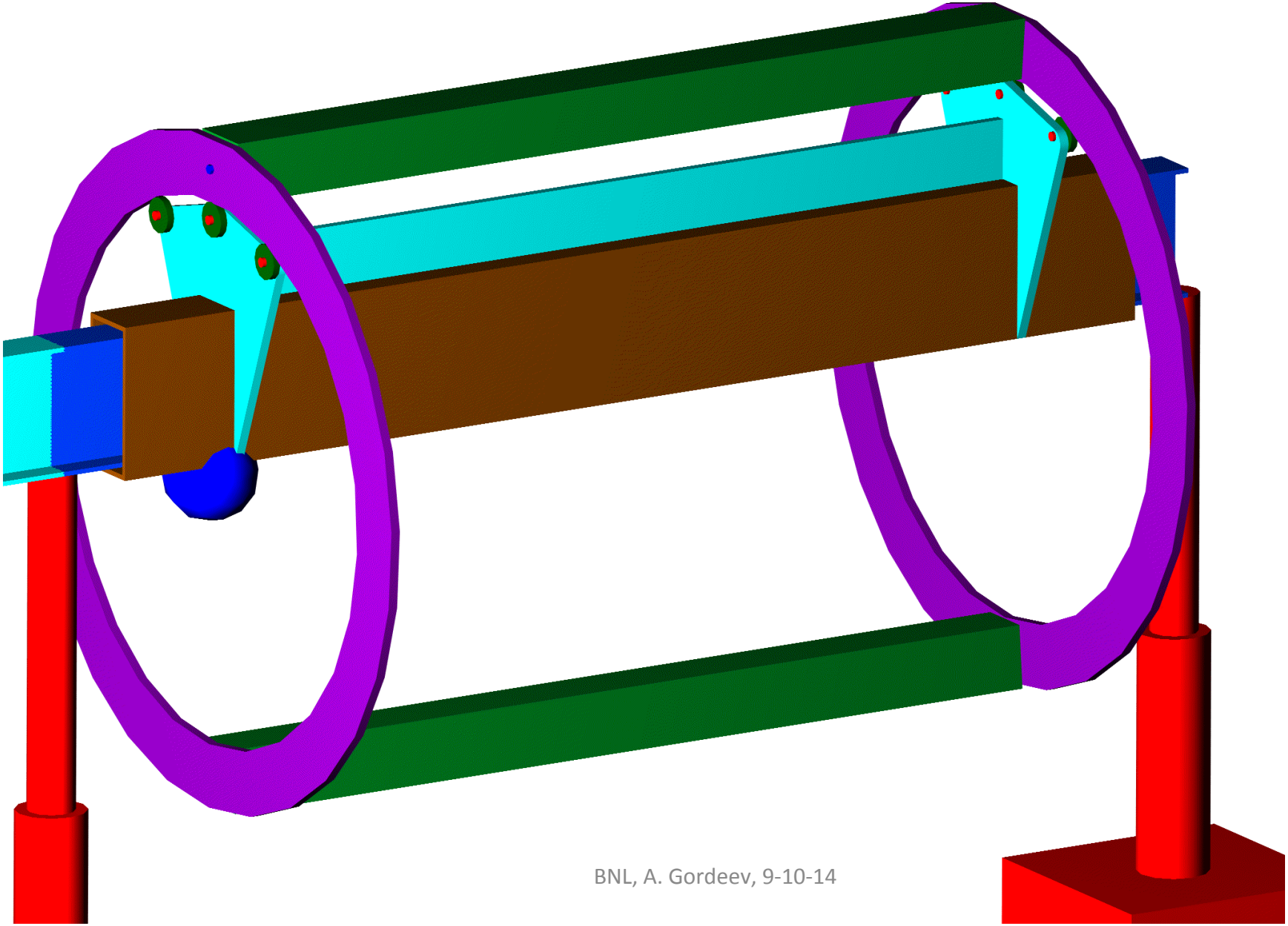

sPHENIX INNER H-cal ASSEMBLY AND INSTALLATION

PROPOSAL. Tooling . COMPLETE ASSEMLY AND INSTALLATION SCHEME

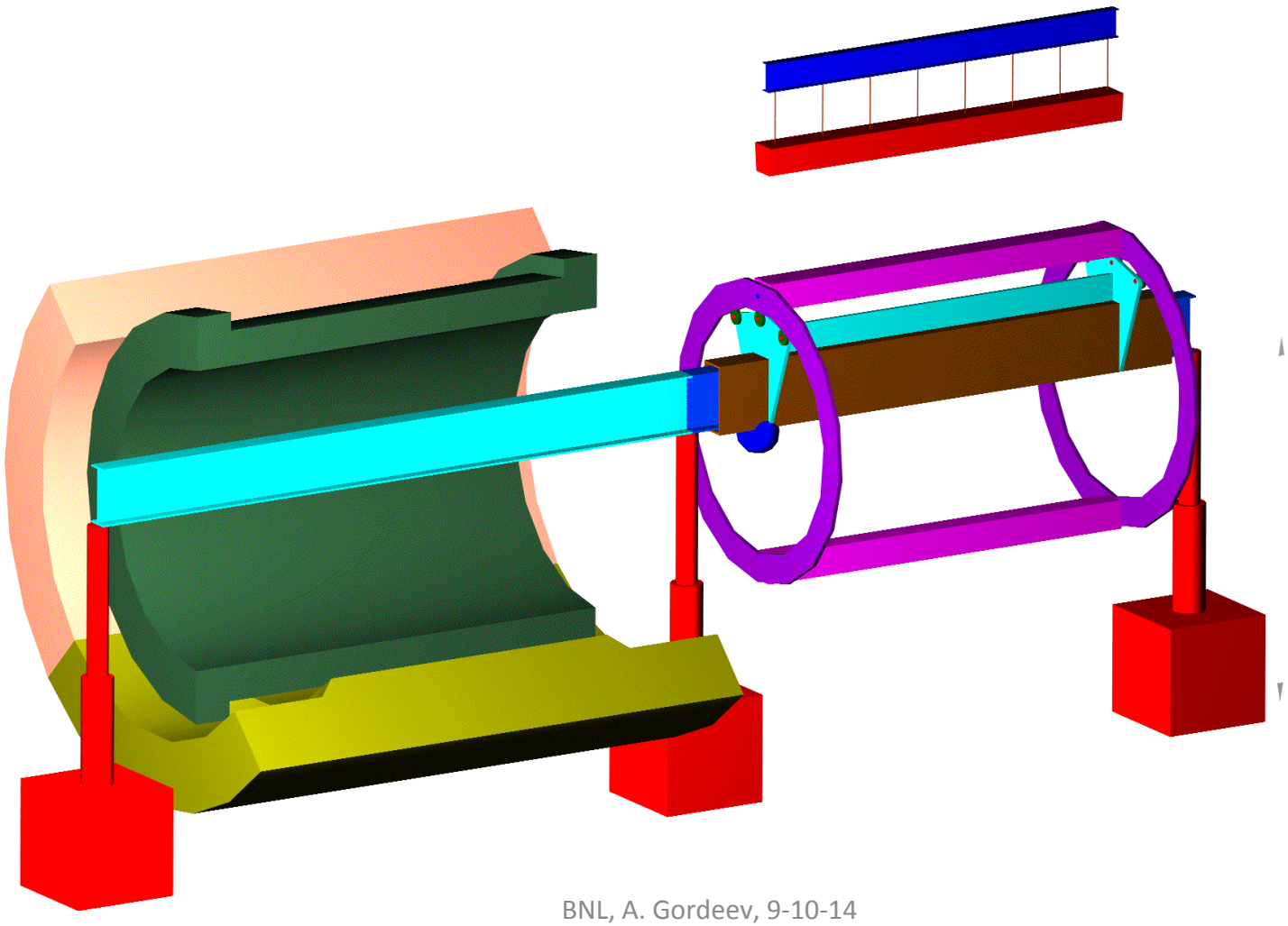

sPHENIX INNER H-cal ASSEMBLY AND INSTALLATION

PROPOSAL. CASE WITH EM-cal INSTALLATION

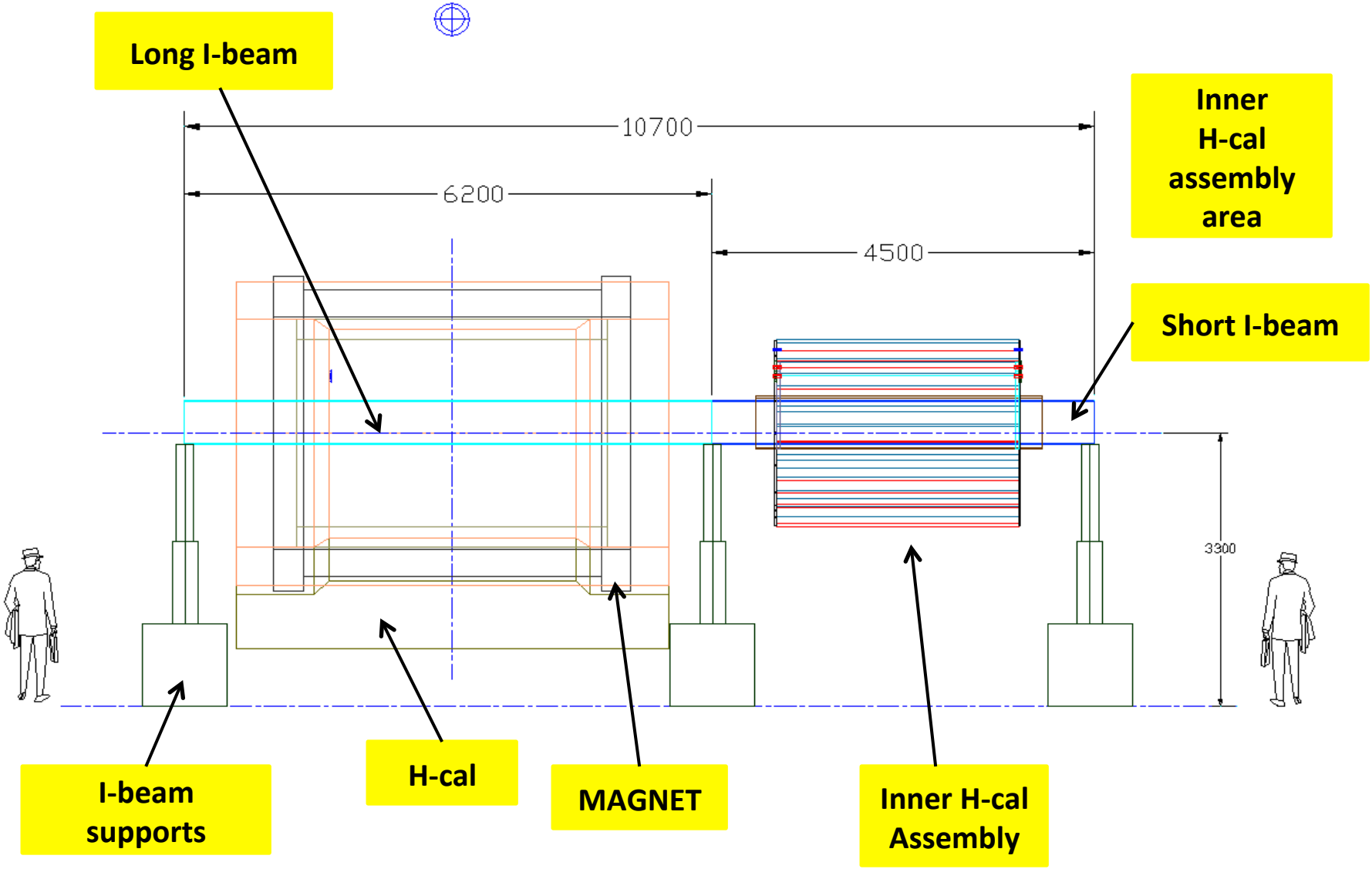

sPHENIX INNER H-cal ASSEMBLY AND INSTALLATION

PROPOSAL. ISO View CASE WITH EM-cal INSTALLATION

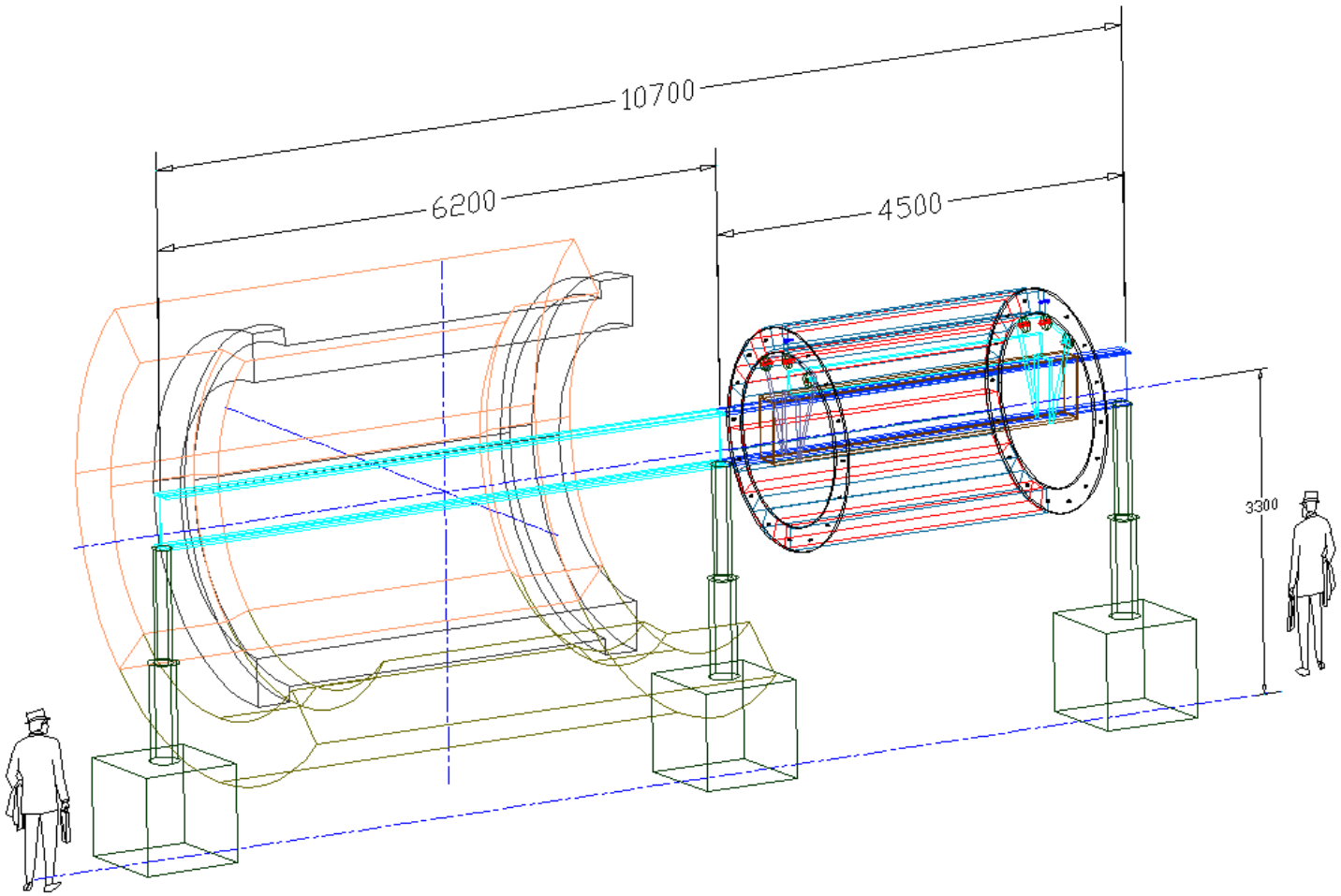

sPHENIX INNER H-cal ASSEMBLY AND INSTALLATION

PROPOSAL. Tooling . SUPPORT BEAM STRUCTURAL ANALYSES

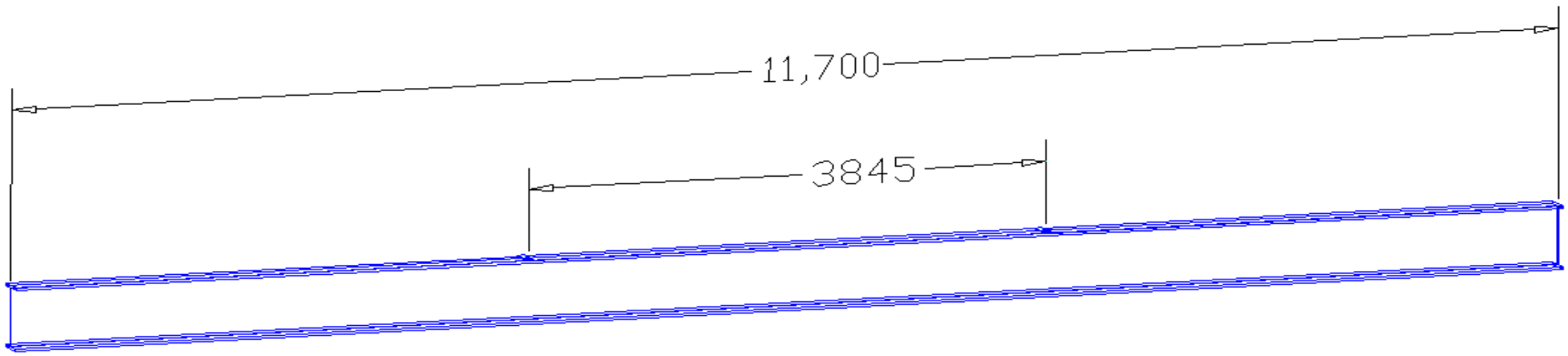

sPHENIX INNER H-cal ASSEMBLY AND INSTALLATION

PROPOSAL. Tooling . SUPPORT BEAM STRUCTURAL ANALYSES. SETTING

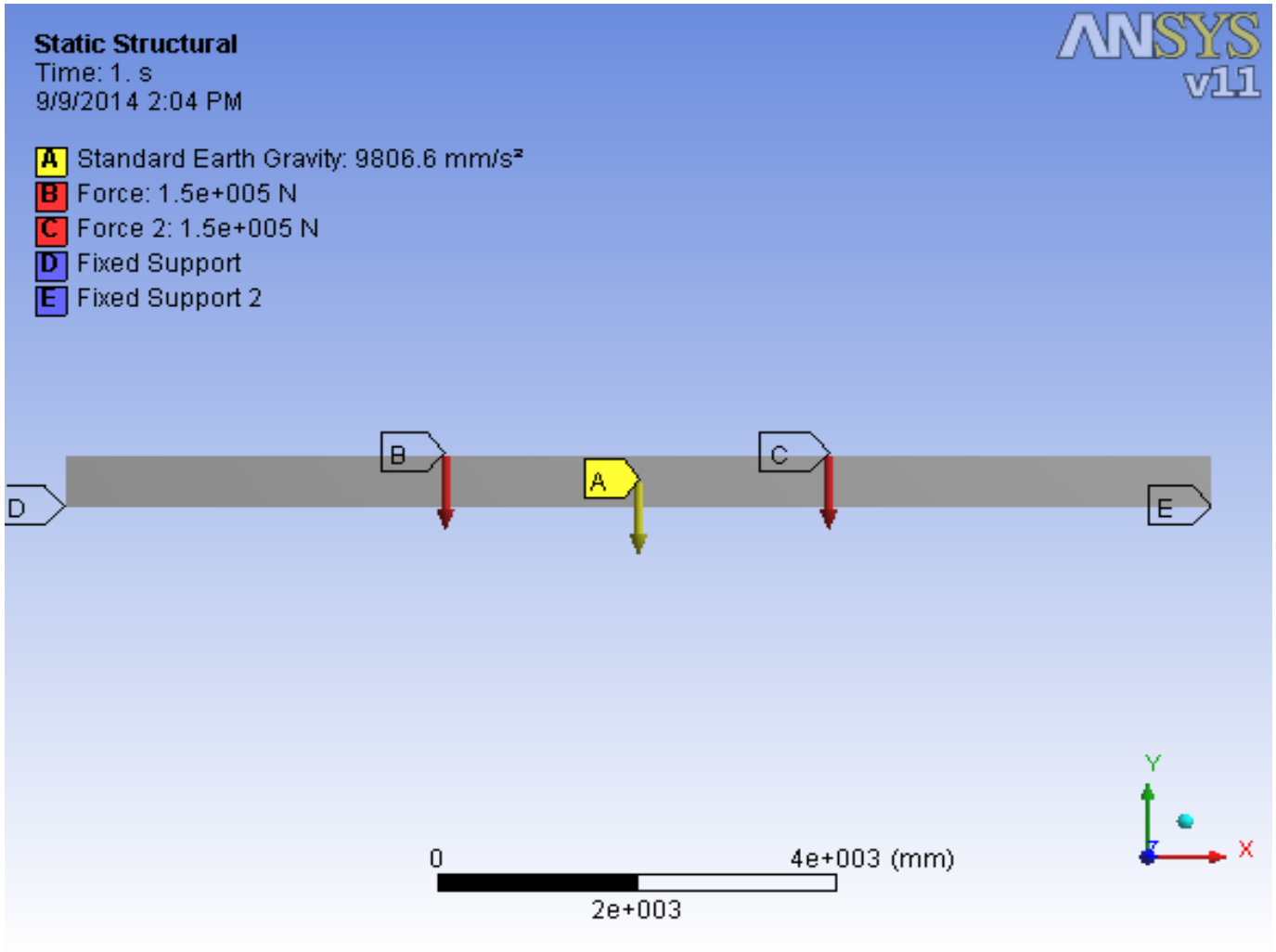

sPHENIX INNER H-cal ASSEMBLY AND INSTALLATION

PROPOSAL. Tooling . SUPPORT BEAM STRUCTURAL ANALYSES. DEFORMATION

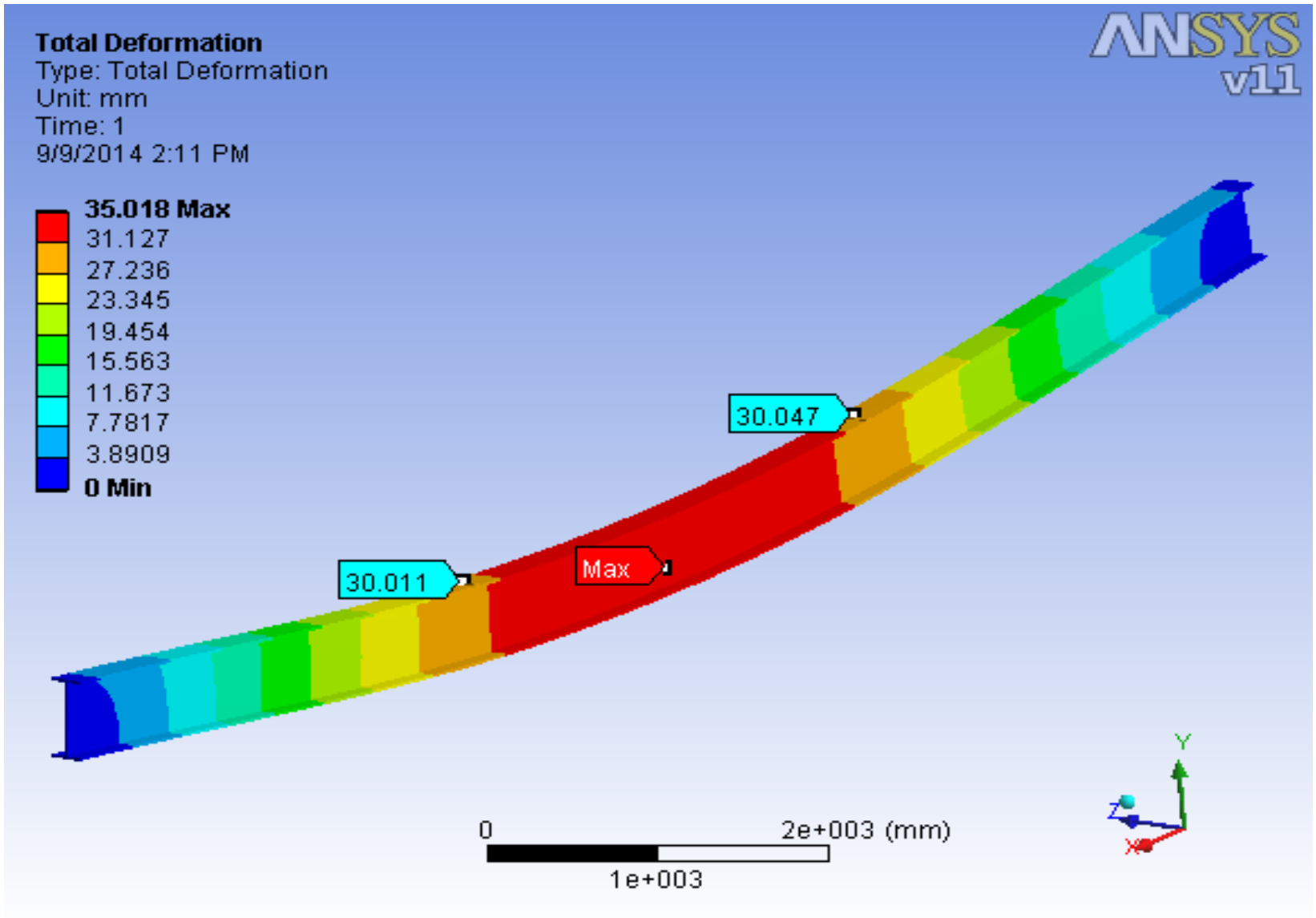

sPHENIX INNER H-cal ASSEMBLY AND INSTALLATION

PROPOSAL. Tooling . SUPPORT BEAM STRUCTURAL ANALYSES. STRESS

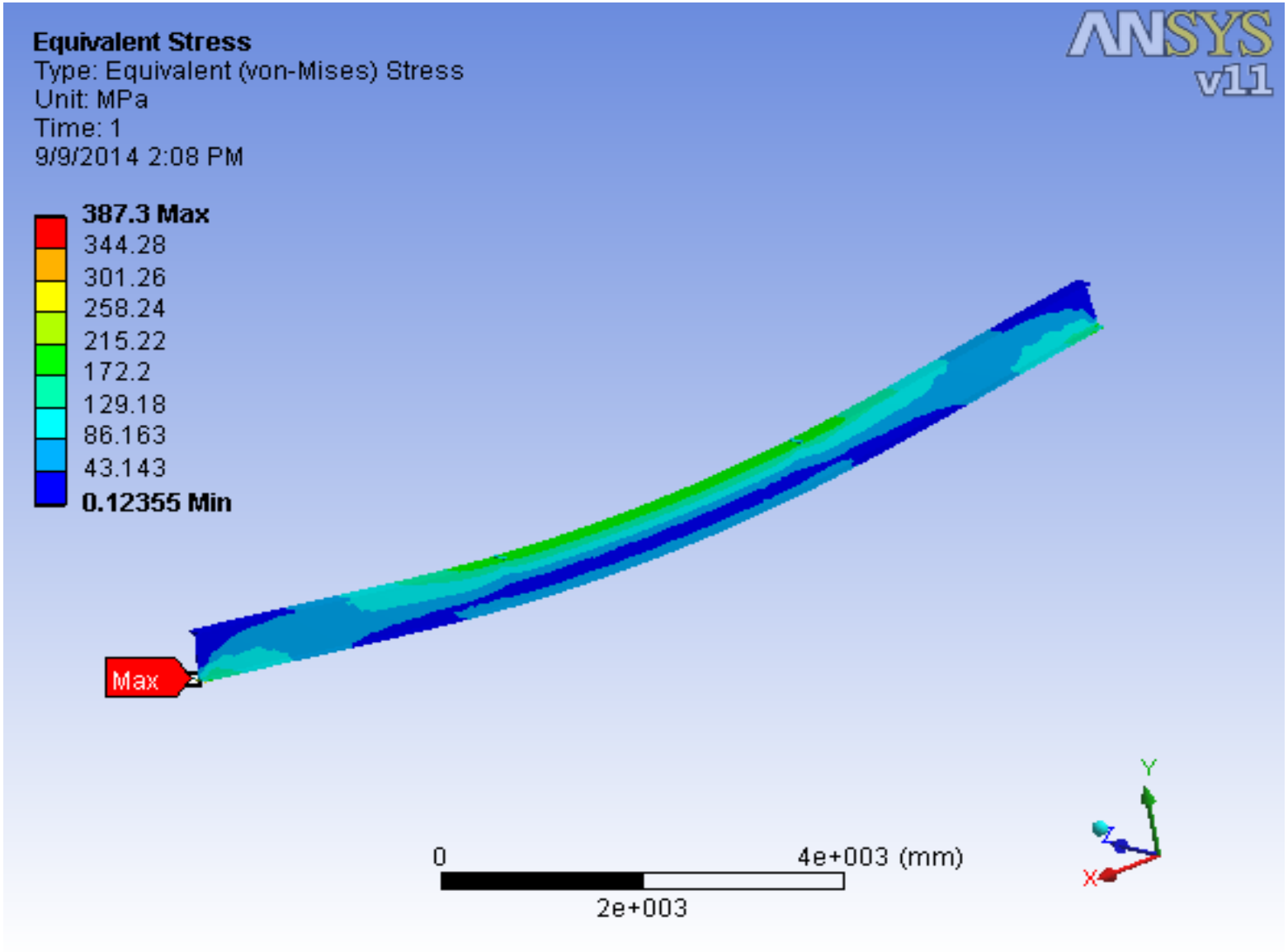

xPHENIX INNER H-cal ASSEMBLY AND INSTALLATION

PROPOSAL. Tooling . SUPPORT BEAM STRUCTURAL ANALYSES. STRESS

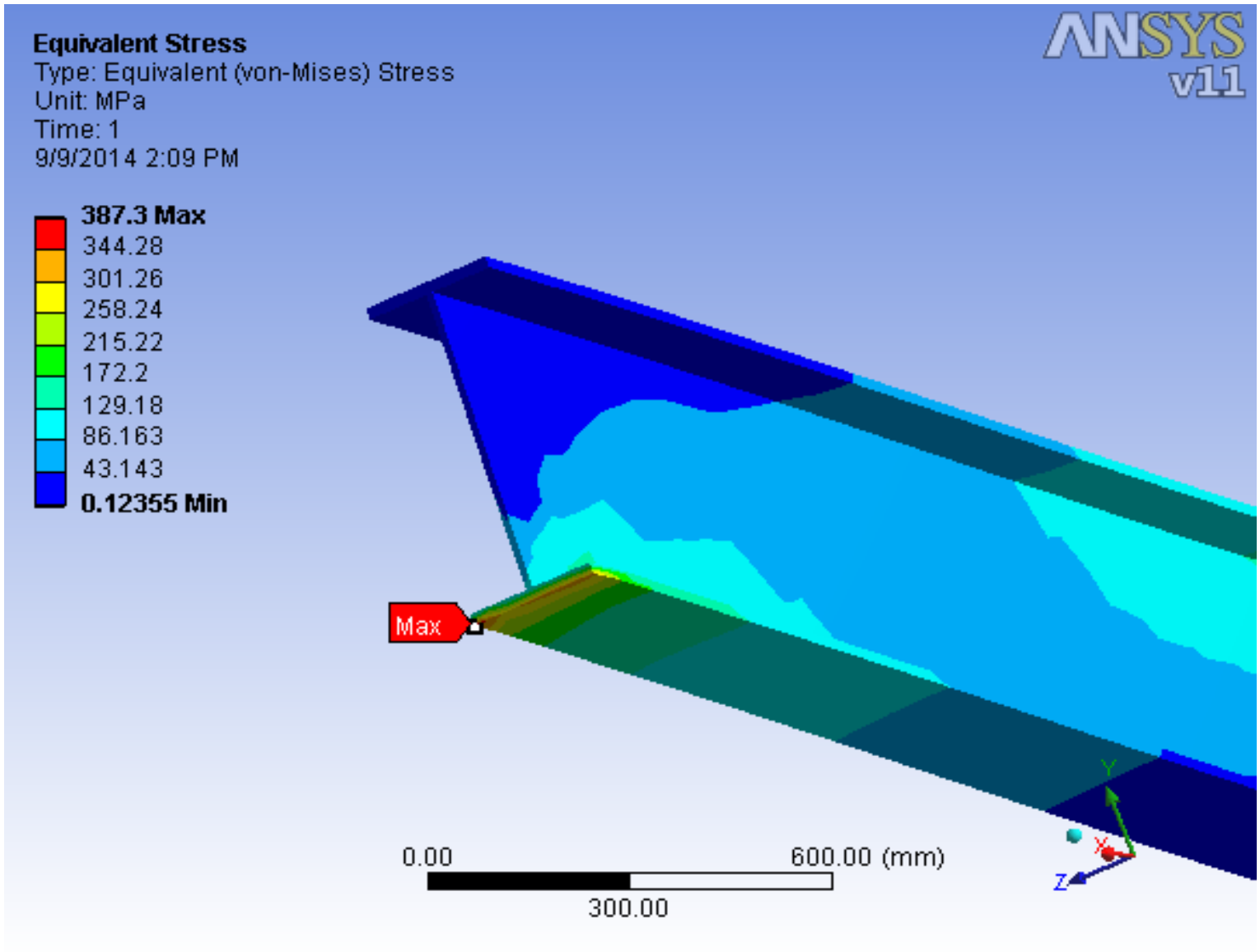

Global assembly Plan

The west carriage assembled at 1008 with platforms for racks

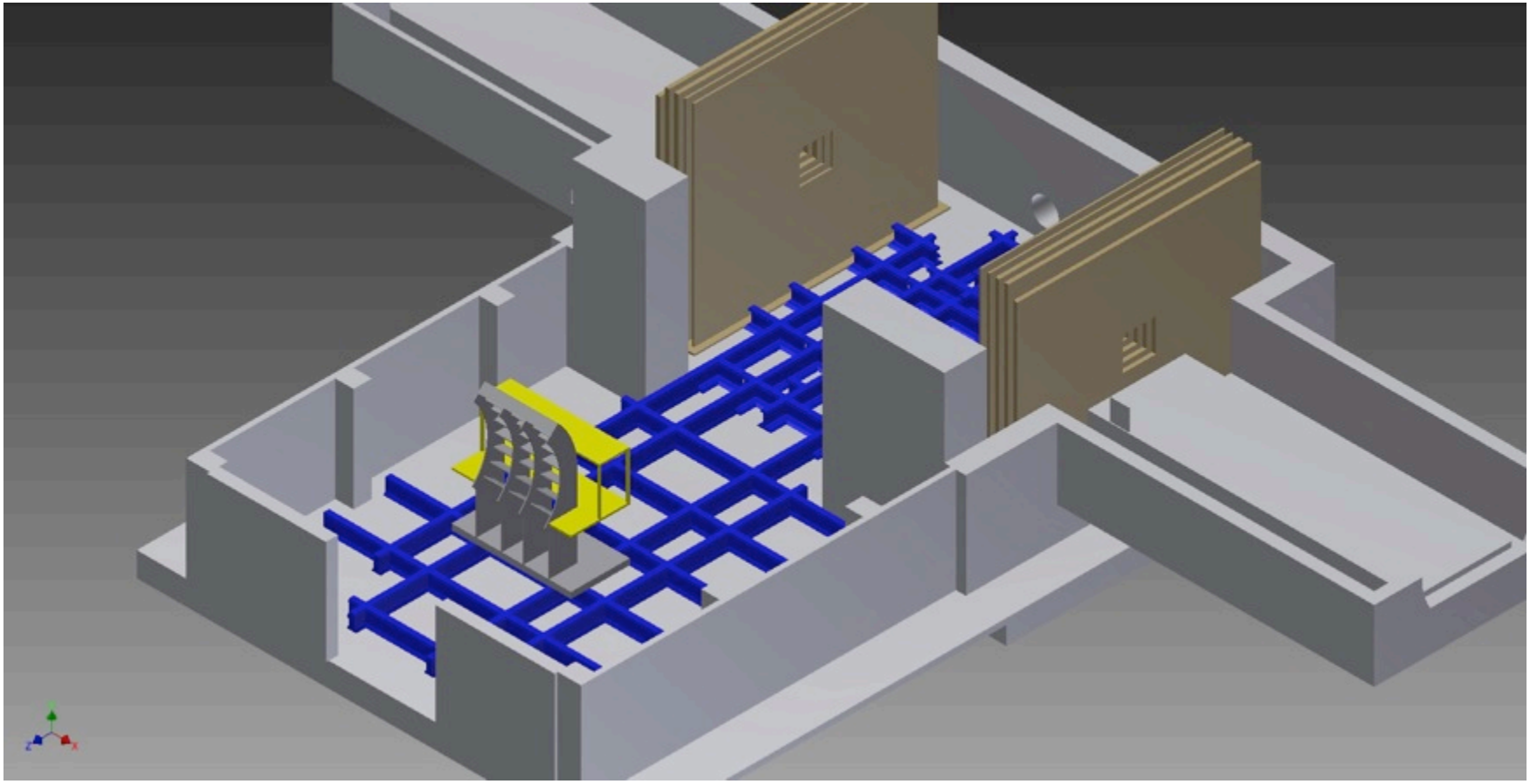

Global assembly Plan

West carriage moved into IR

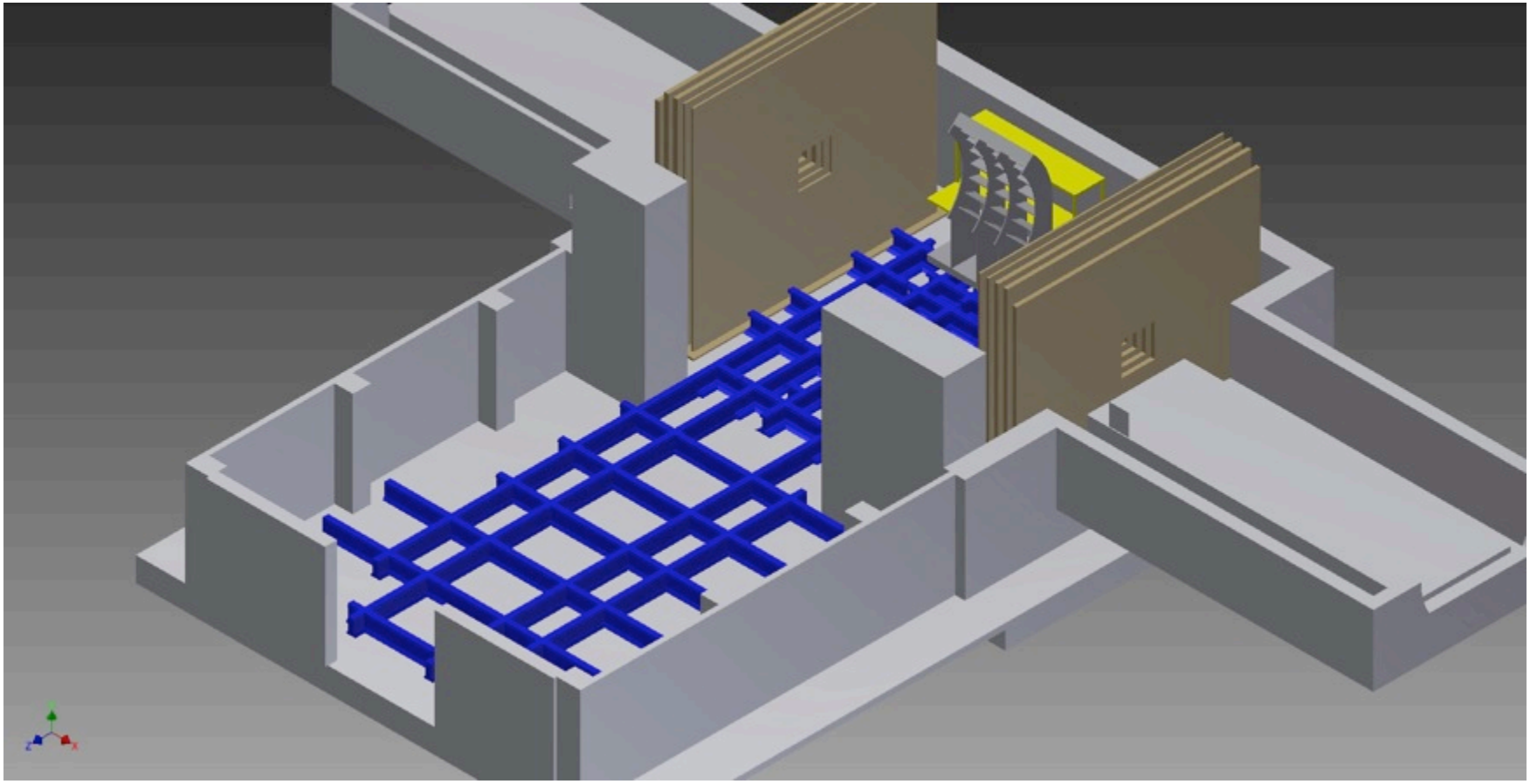

NOTE: The west carriage needs to be moved 5ft to the North after it is moved to the West wall.
It is desirable to make this move easier than its current process.

Global assembly Plan

¼ of Outer HCAL moved into 1008 AH

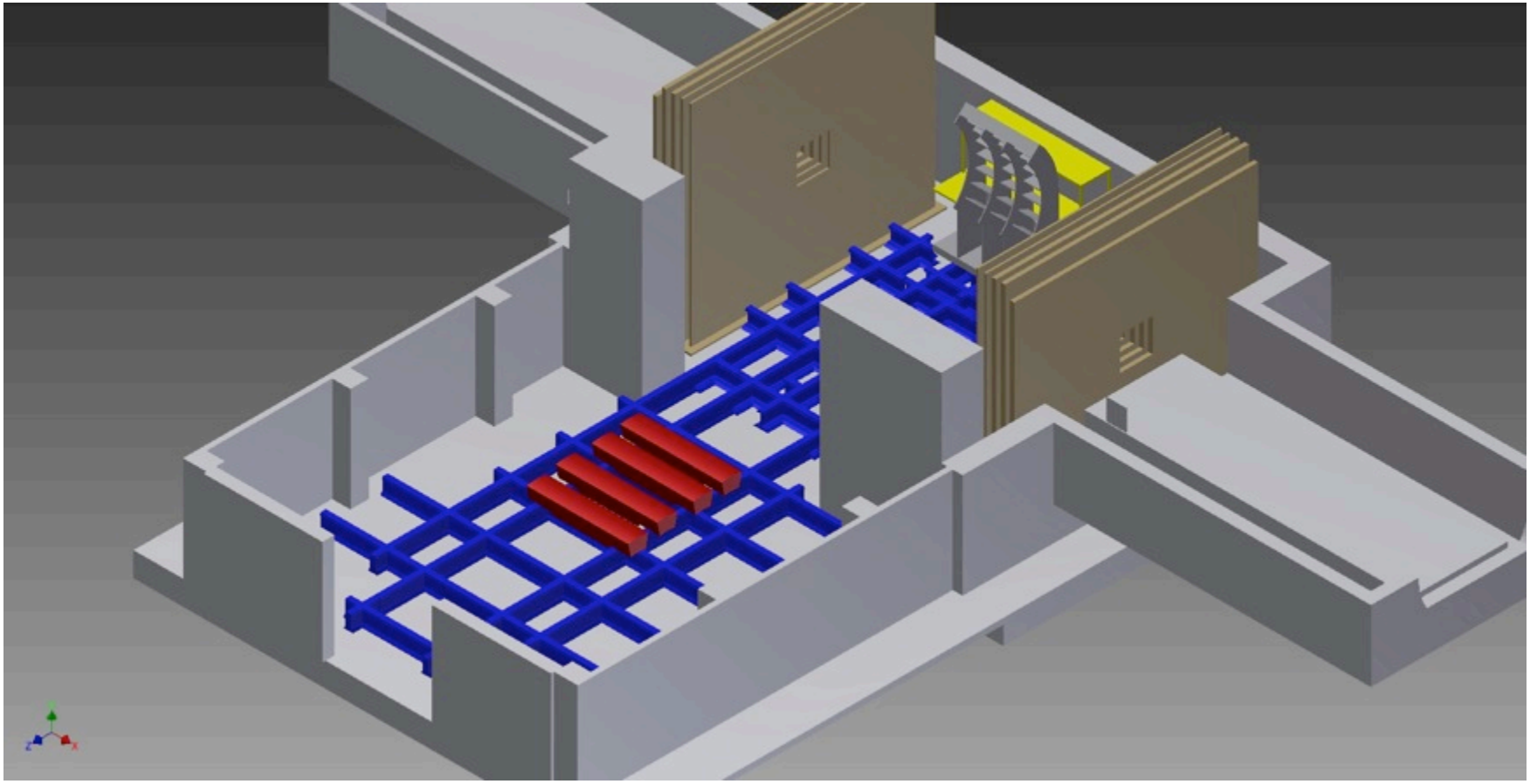

NOTE: The 4 modules shown are **not** the current design, they are being used for illustration purposes only

Global assembly Plan

Central Pedestal assembled in 1008 AH

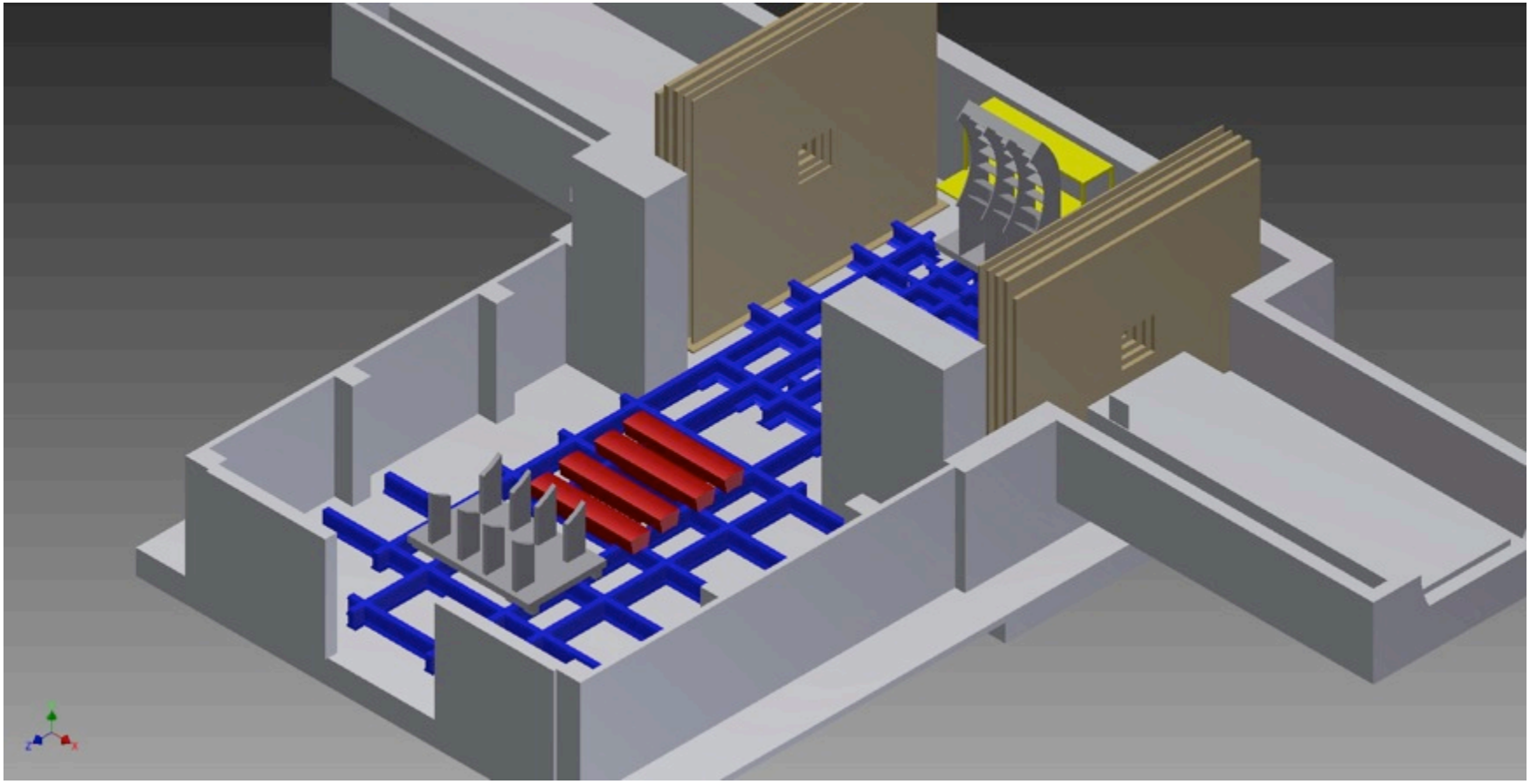

Global assembly Plan

¼ of Outer HCAL assembled onto CP

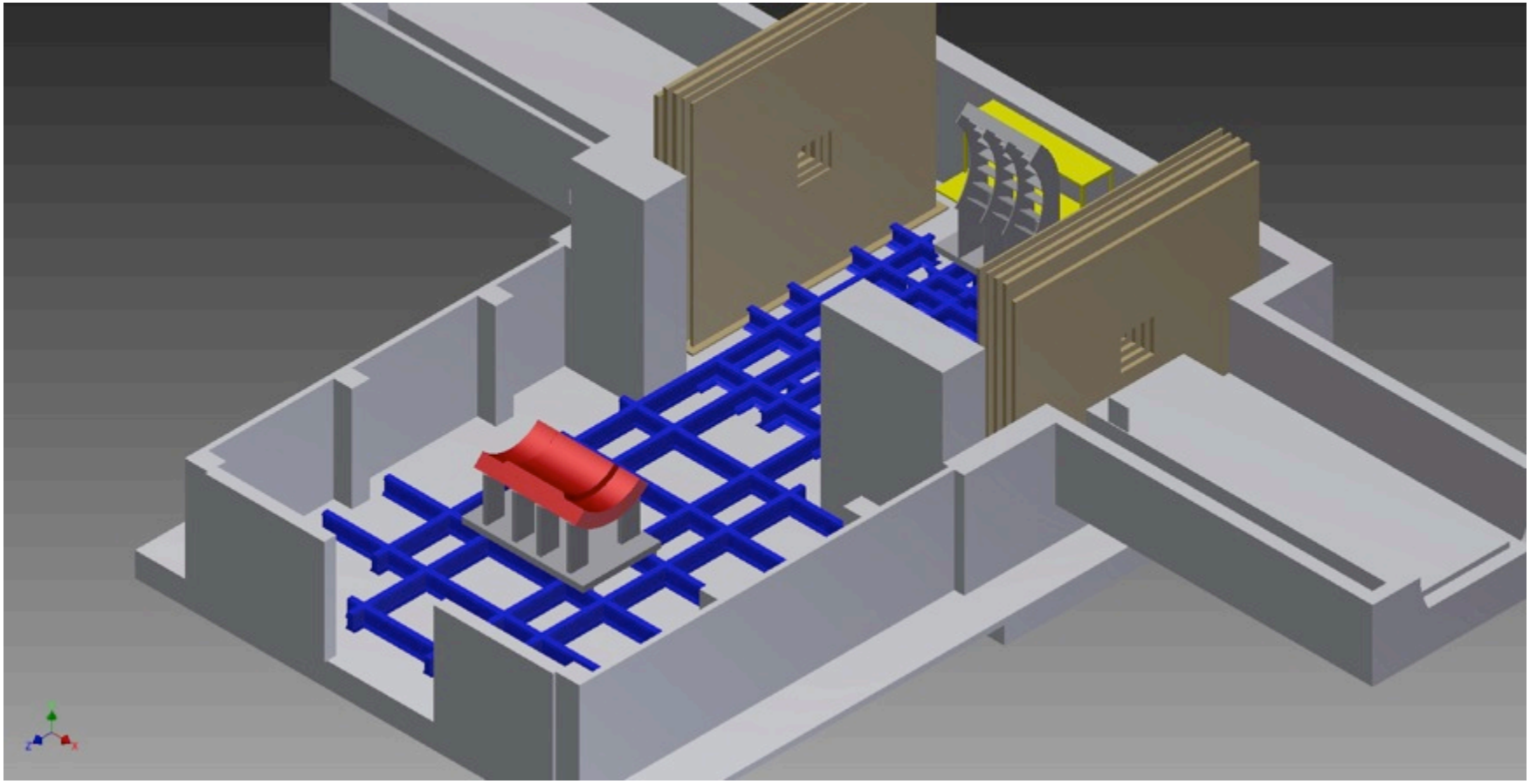

Global assembly Plan

sPHENIX magnet mounted to Central Pedestal

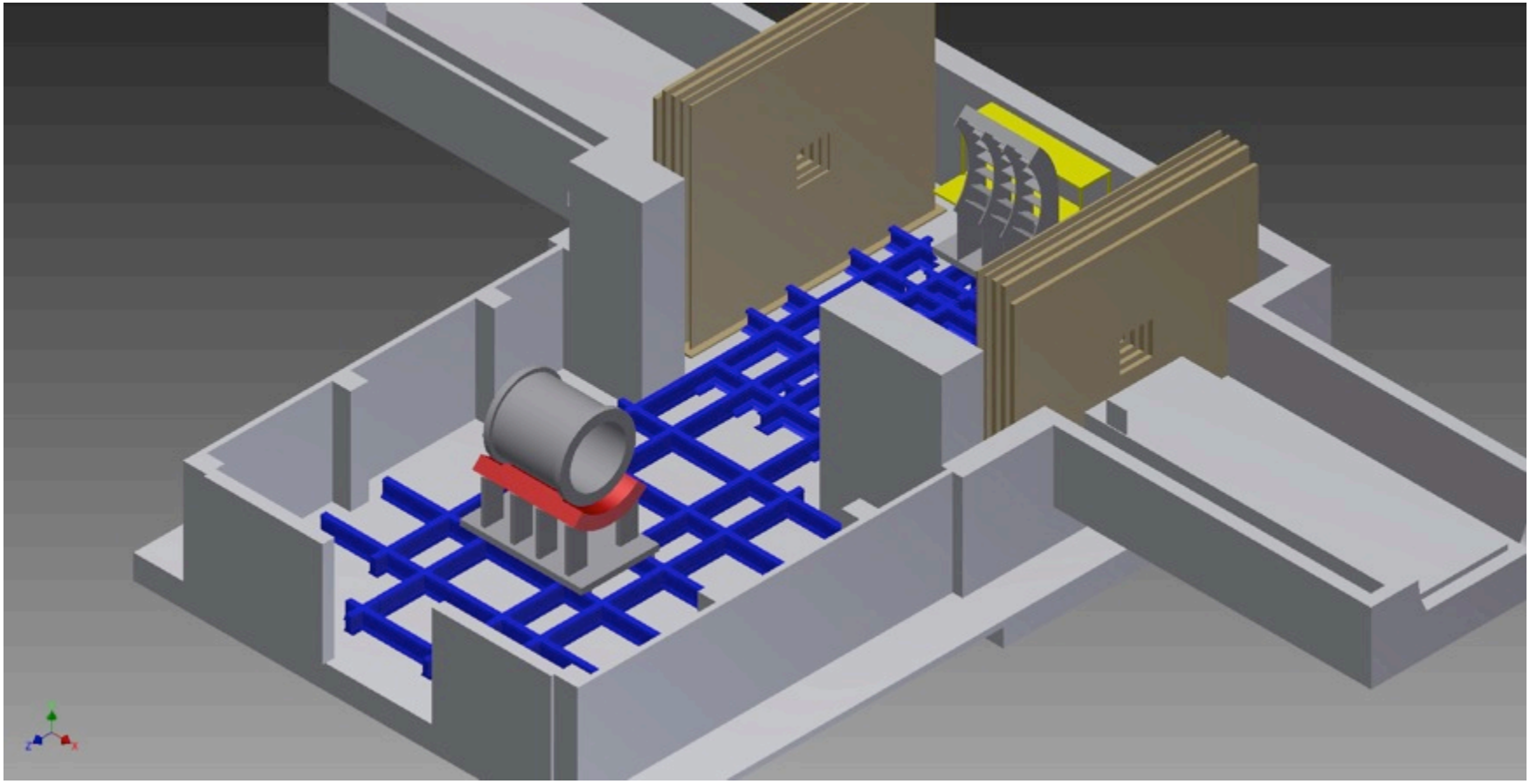

Global assembly Plan

Inner HCAL modules transported to 1008 AH

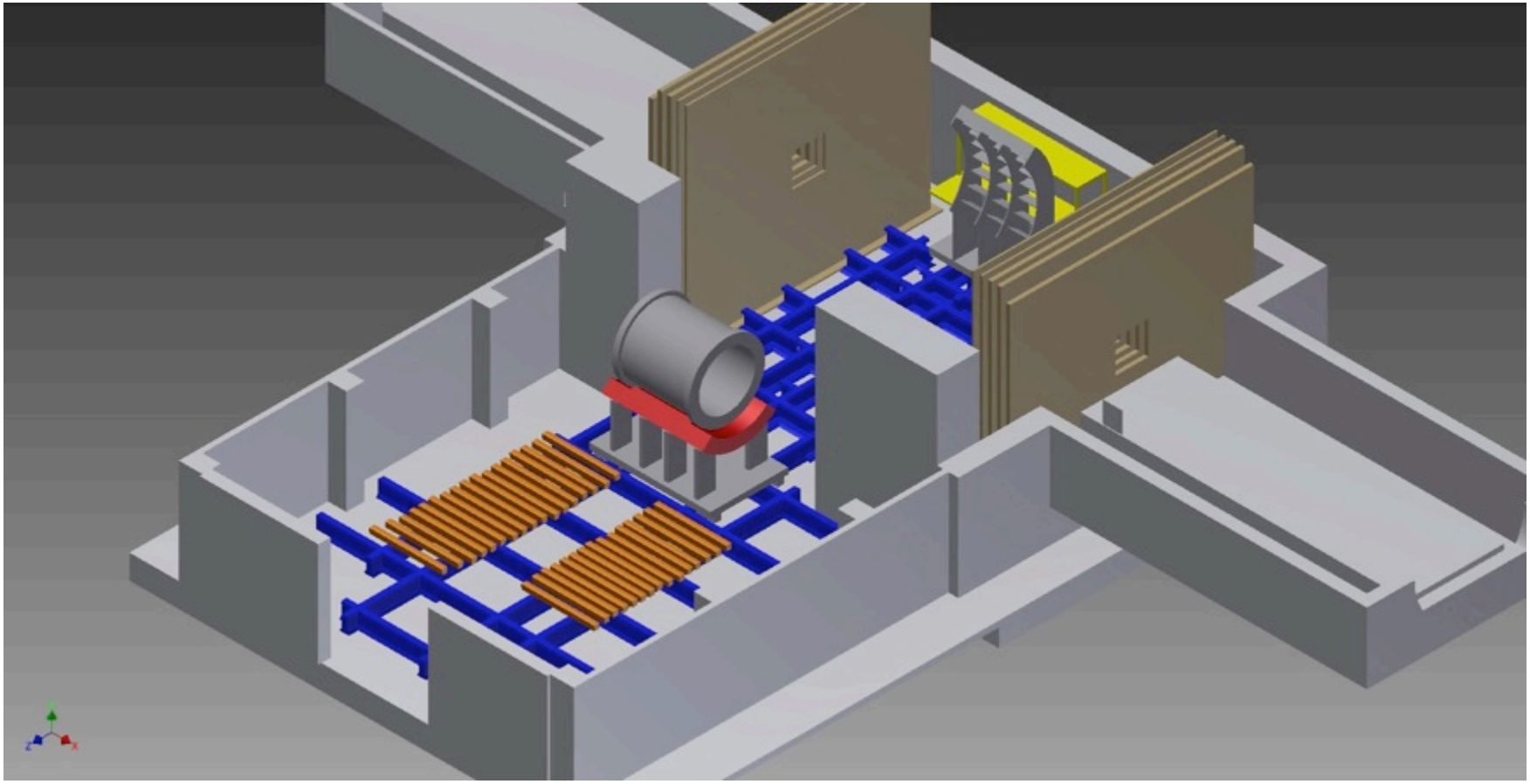

Global assembly Plan

Inner HCAL modules mounted and being installed

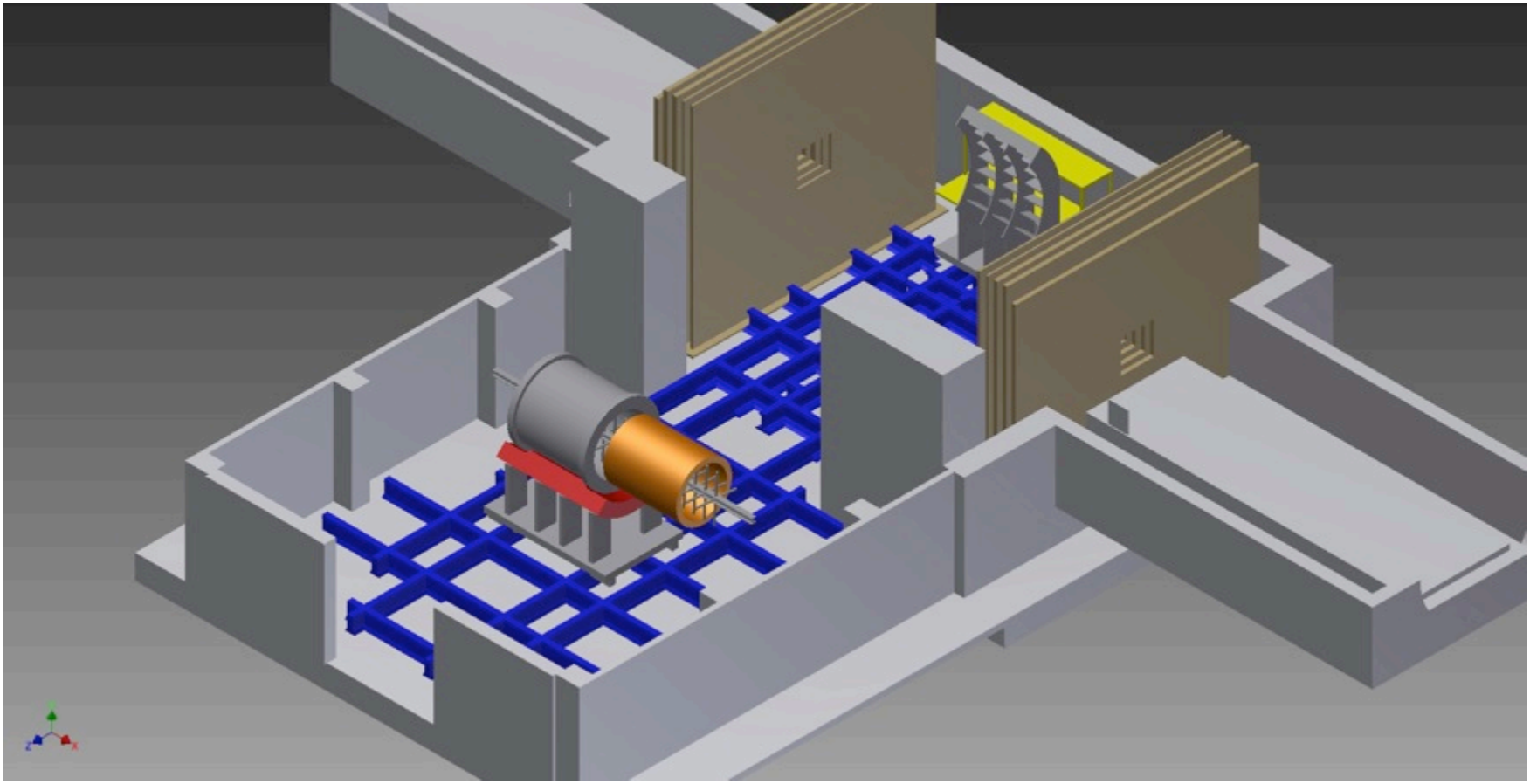

NOTE: Installation fixture is conceptual at present time

Global assembly Plan

Inner HCAL Installed

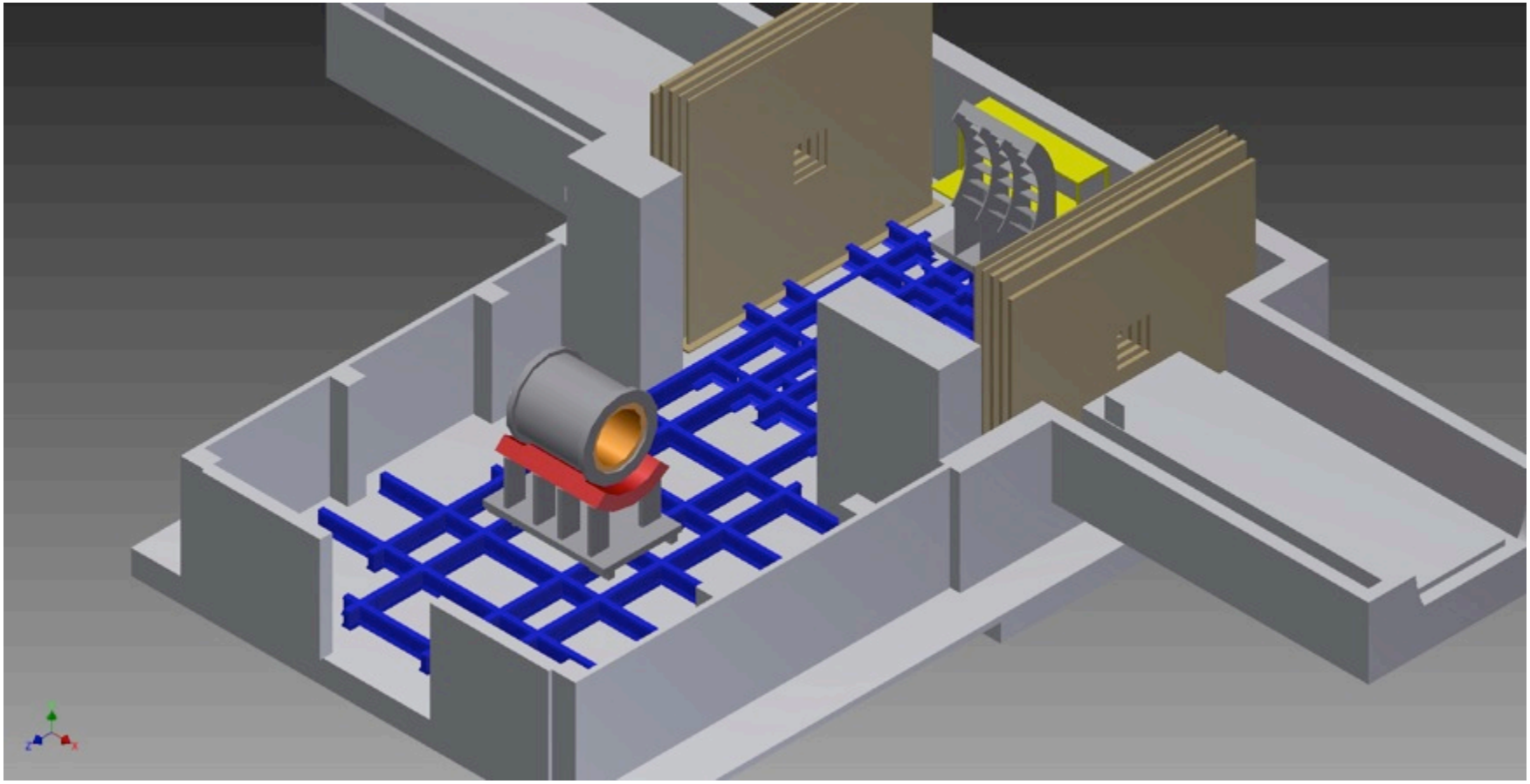

Global assembly Plan

Outer HCAL support structure installed

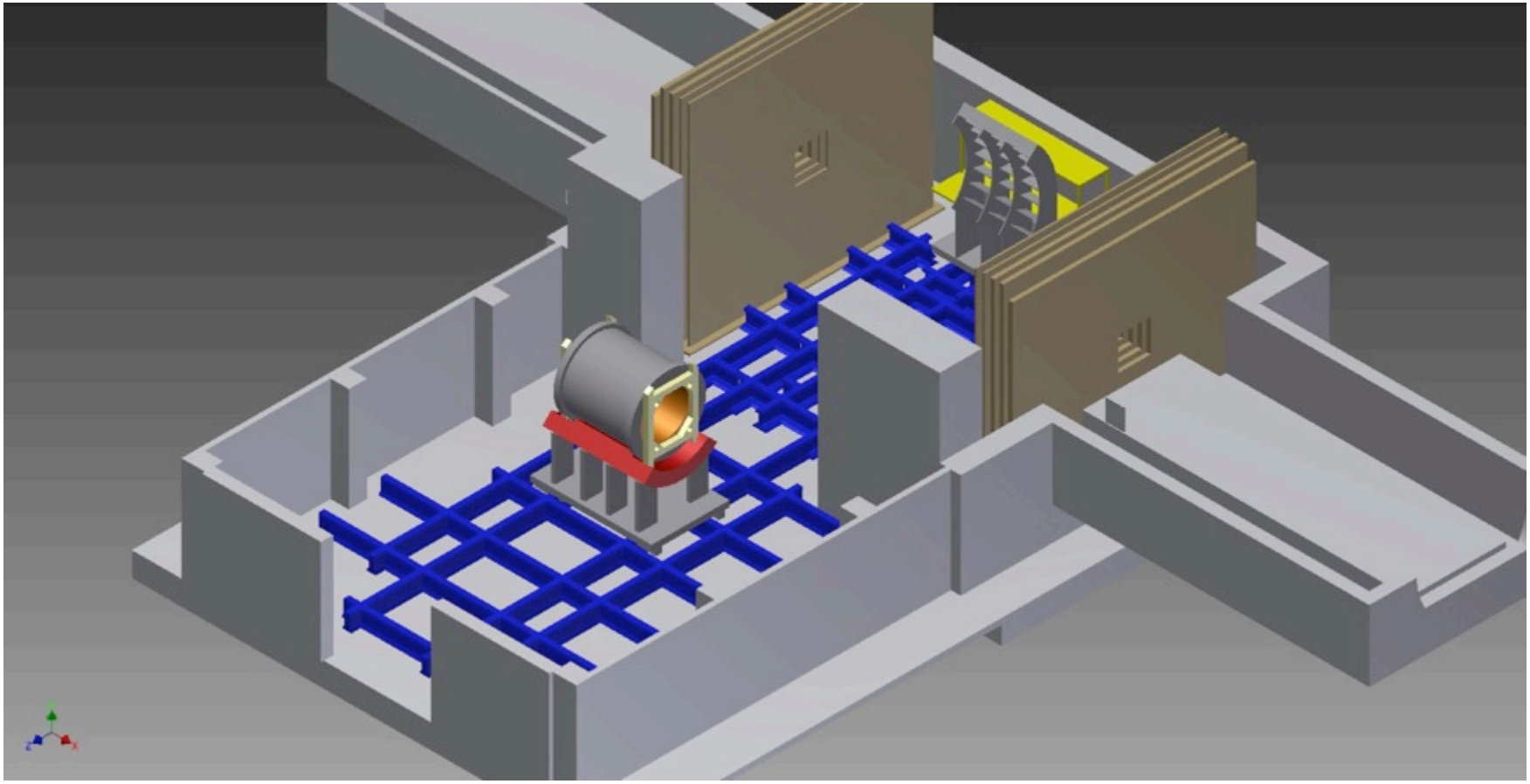

NOTE: Support structure is conceptual at this time

Central Pedestal moved to IR

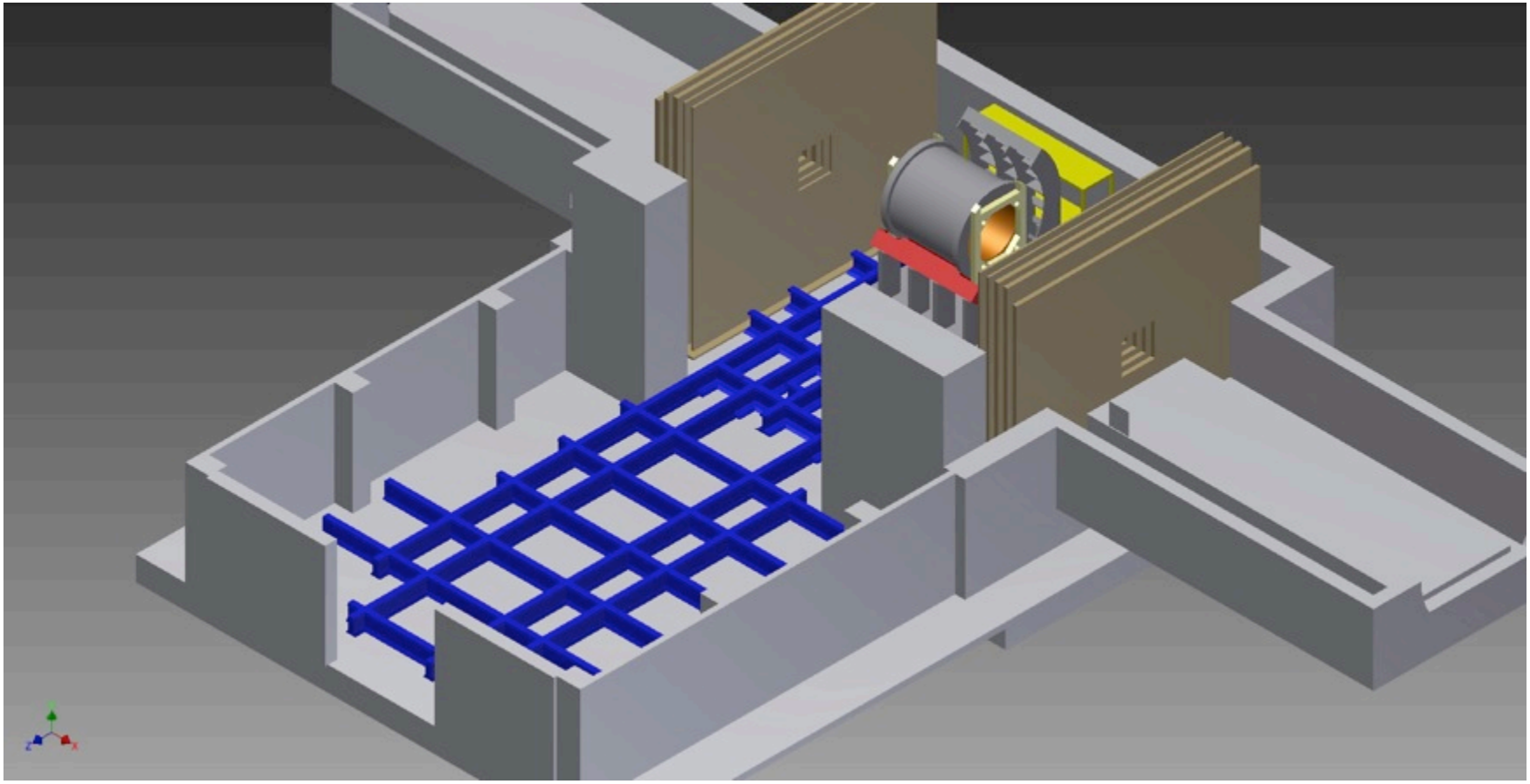

Outer HCAL modules for WC and CP moved to 1008

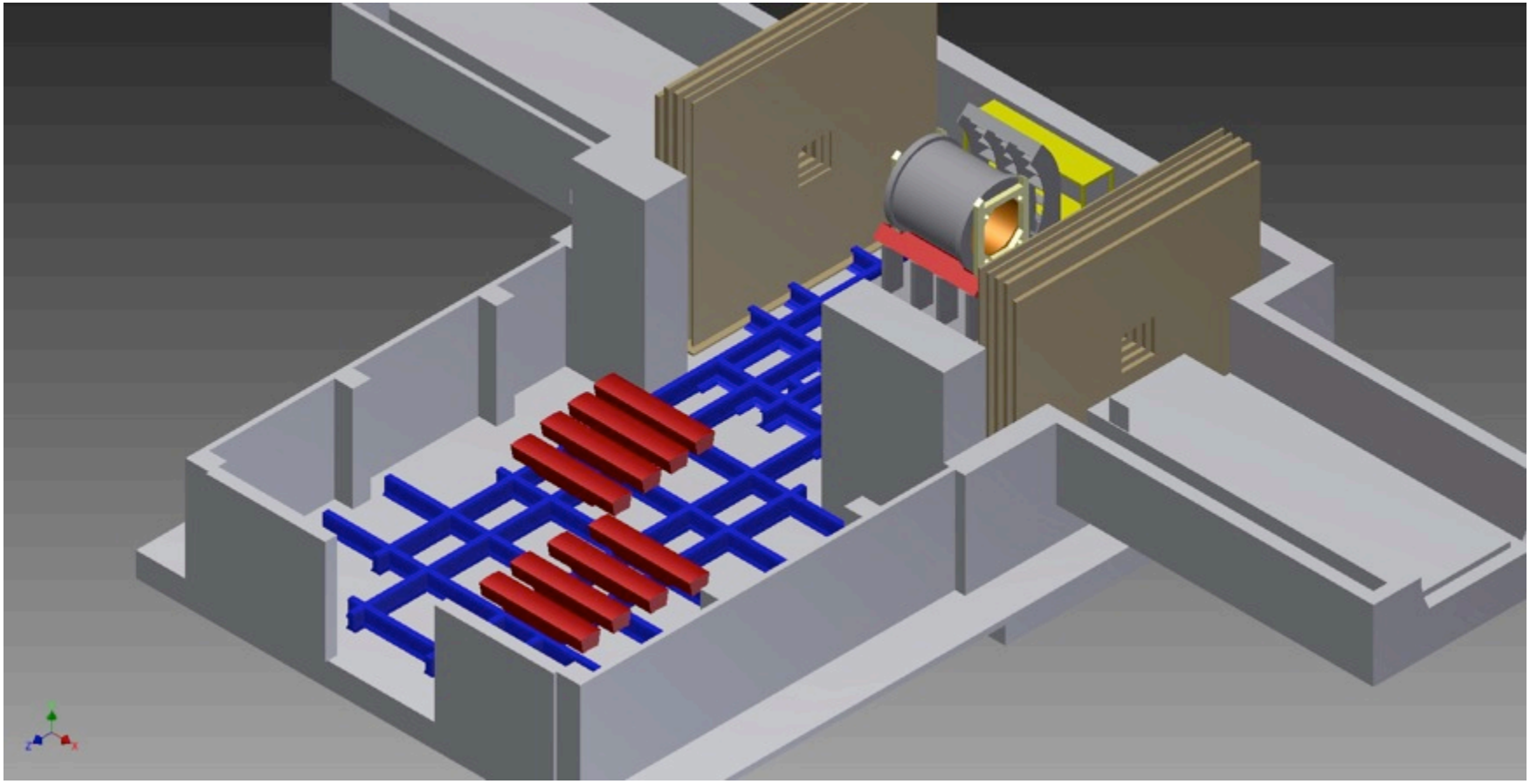

Global assembly Plan

Outer HCAL modules for WC moved into IR

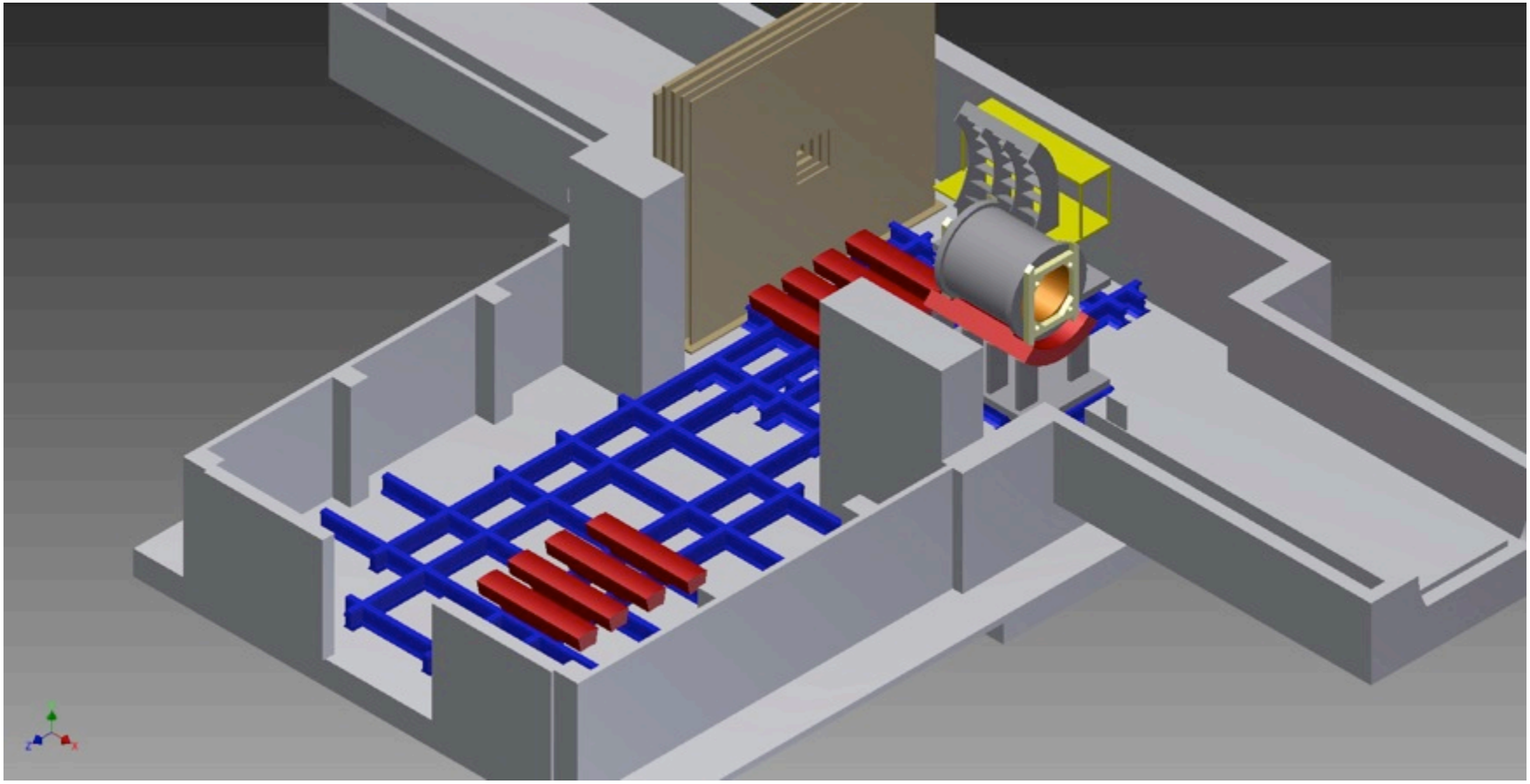

NOTE: North MUID has been removed for visual purposes
CP has been moved North to make room for HCAL modules

Global assembly Plan

HCAL modules installed onto WC

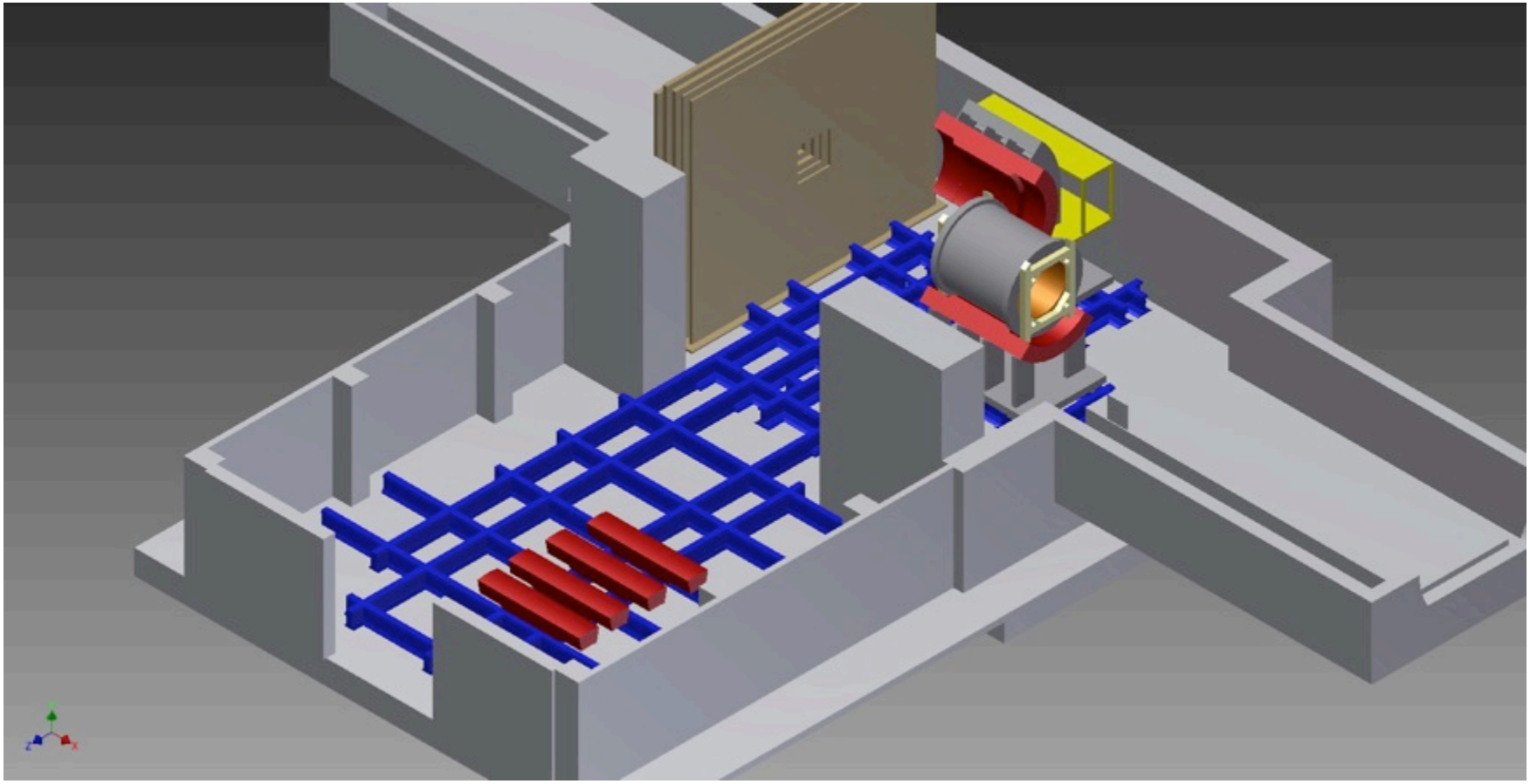

Global assembly Plan

HCAL modules moved into IR for CP

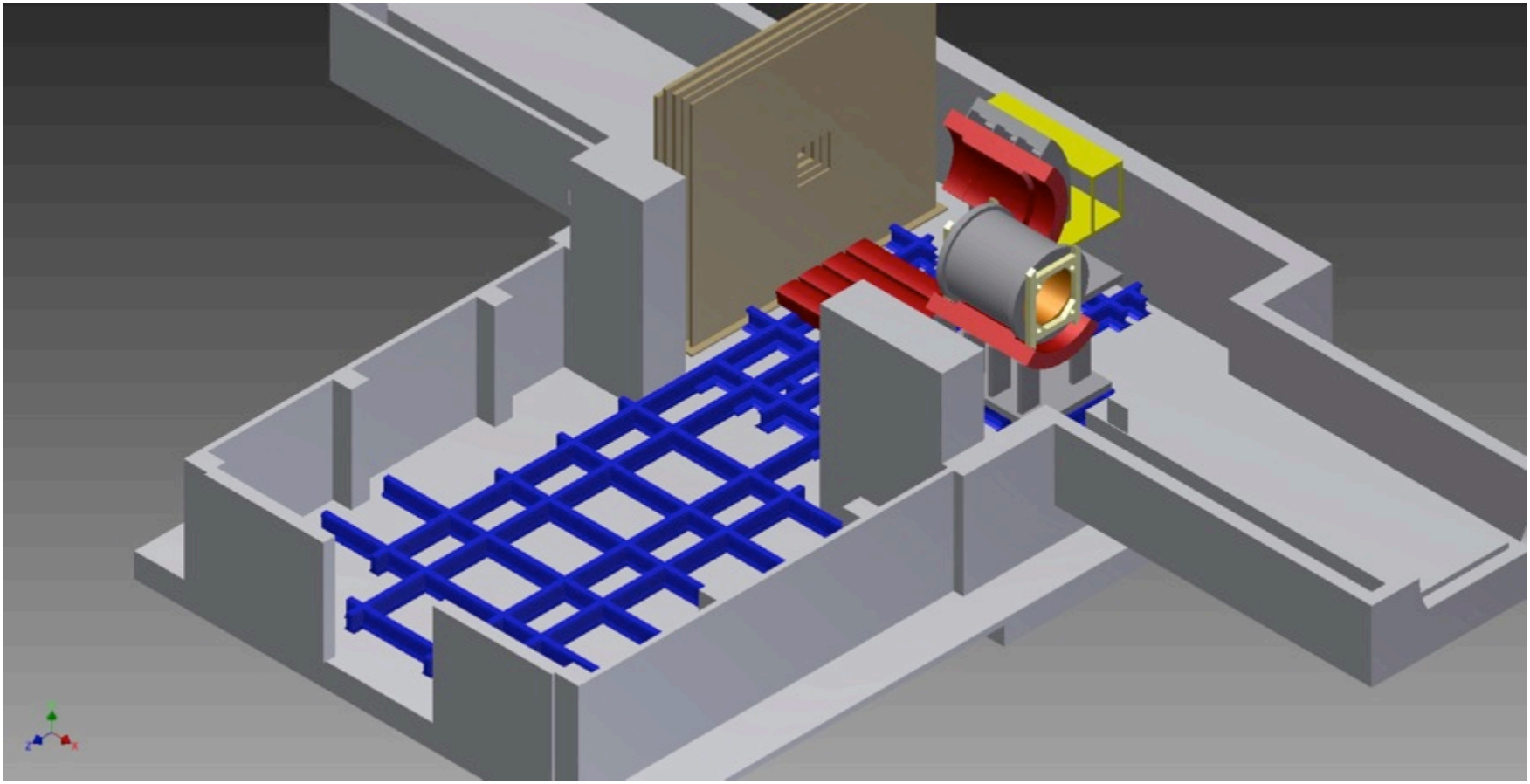

Global assembly Plan

HCAL modules installed onto CP

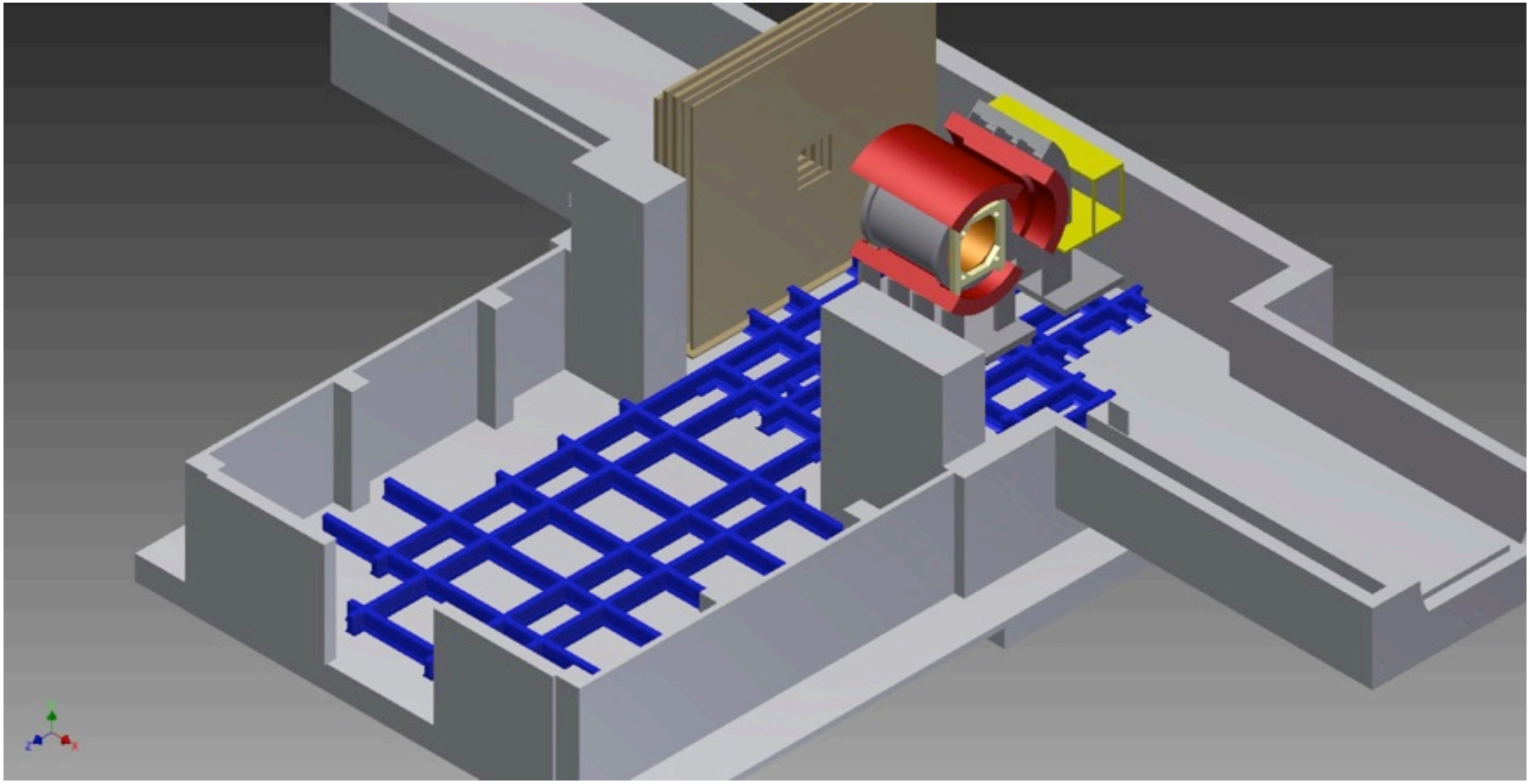

Global assembly Plan

Platform installed on CP

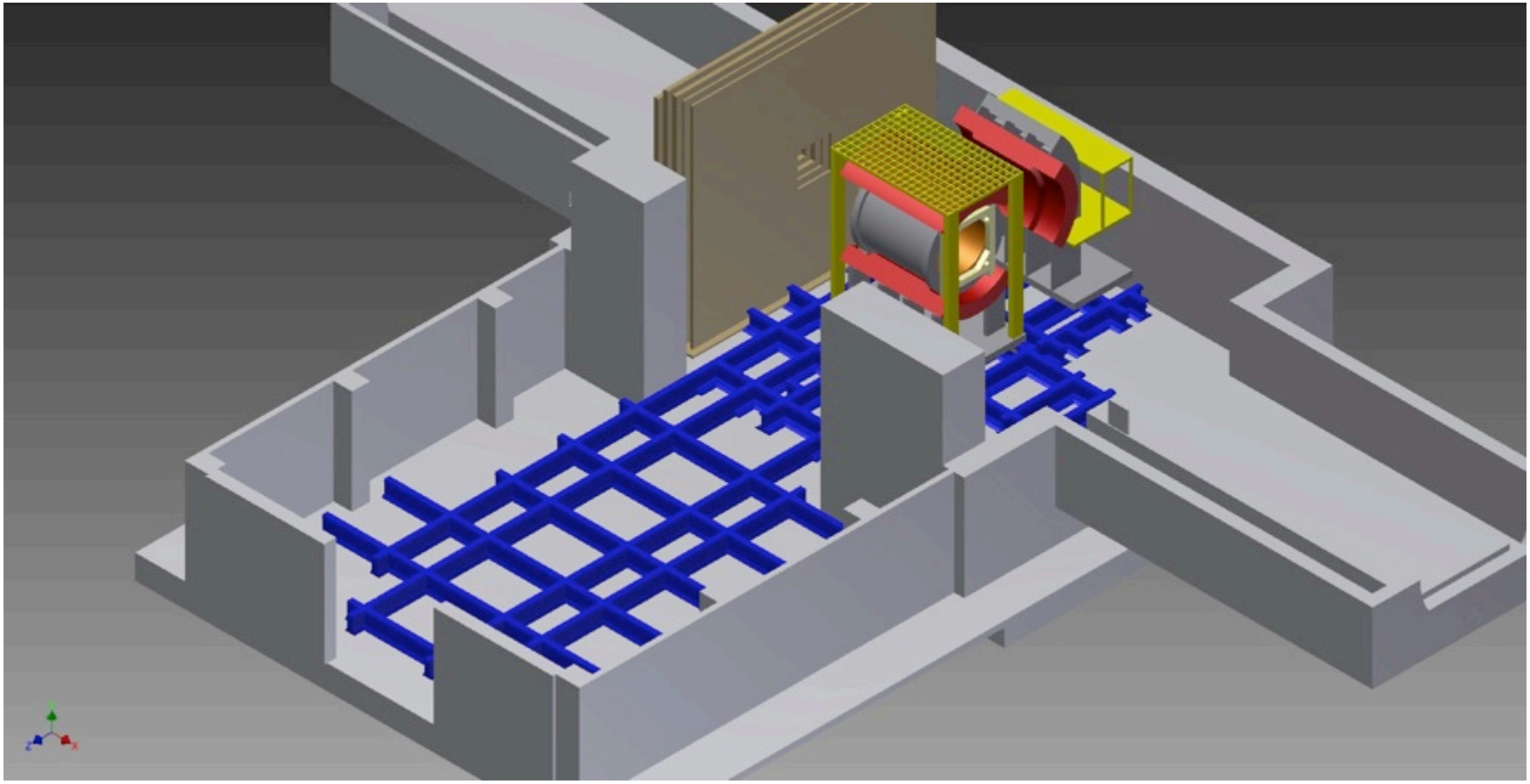

Global assembly Plan

Racks and cable installed and routed for Inner and Outer HCAL

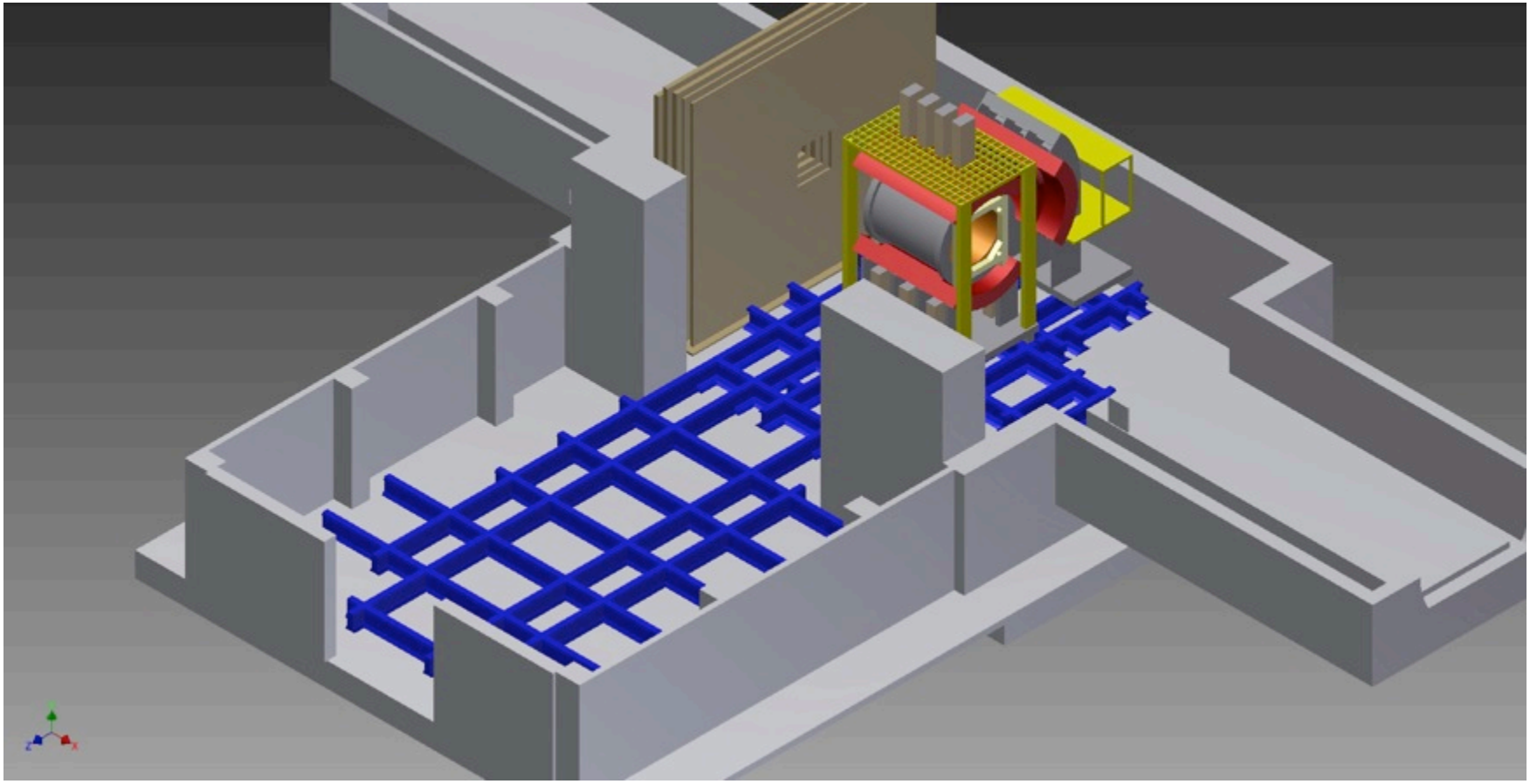

NOTE: The number of racks on the CP does not necessarily represent the number of racks we will have

Global assembly Plan

EMCAL modules brought to 1008 AH

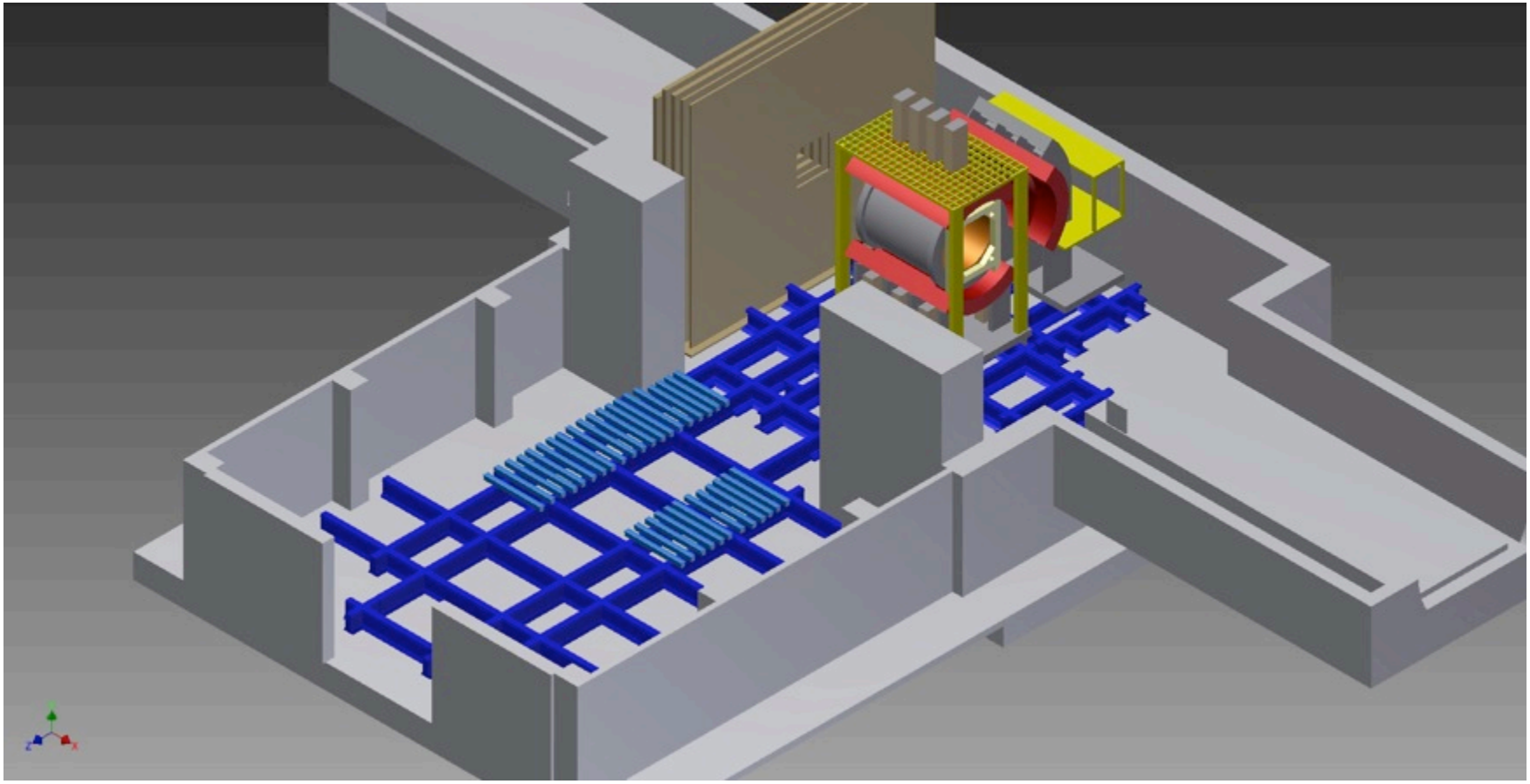

Global assembly Plan

EMCAL modules brought into IR for installation

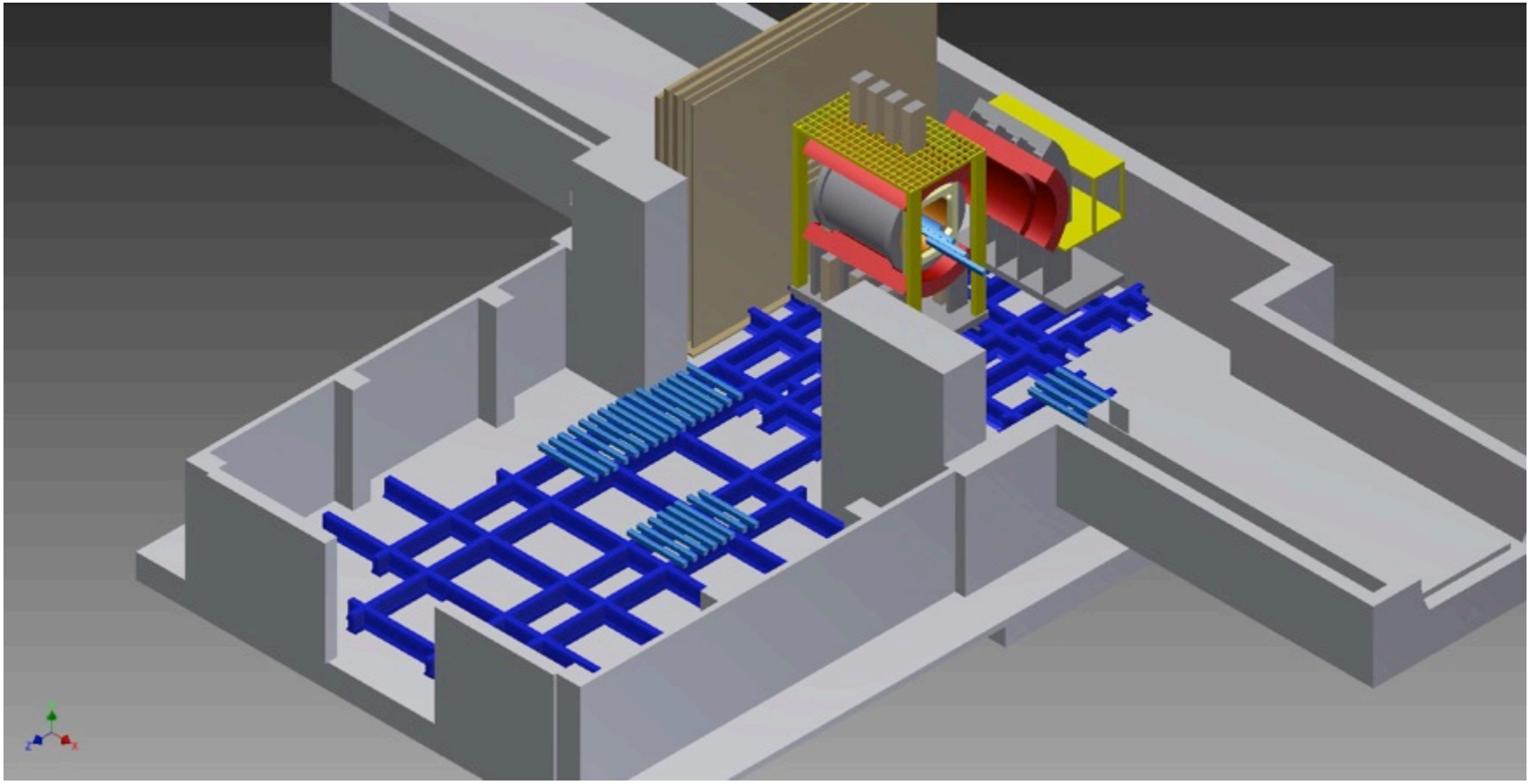

NOTE: EMCAL is being shown as individual modules that will slide inside inner HCAL using a rail system (not shown)

Global assembly Plan

EMCAL installed onto CP

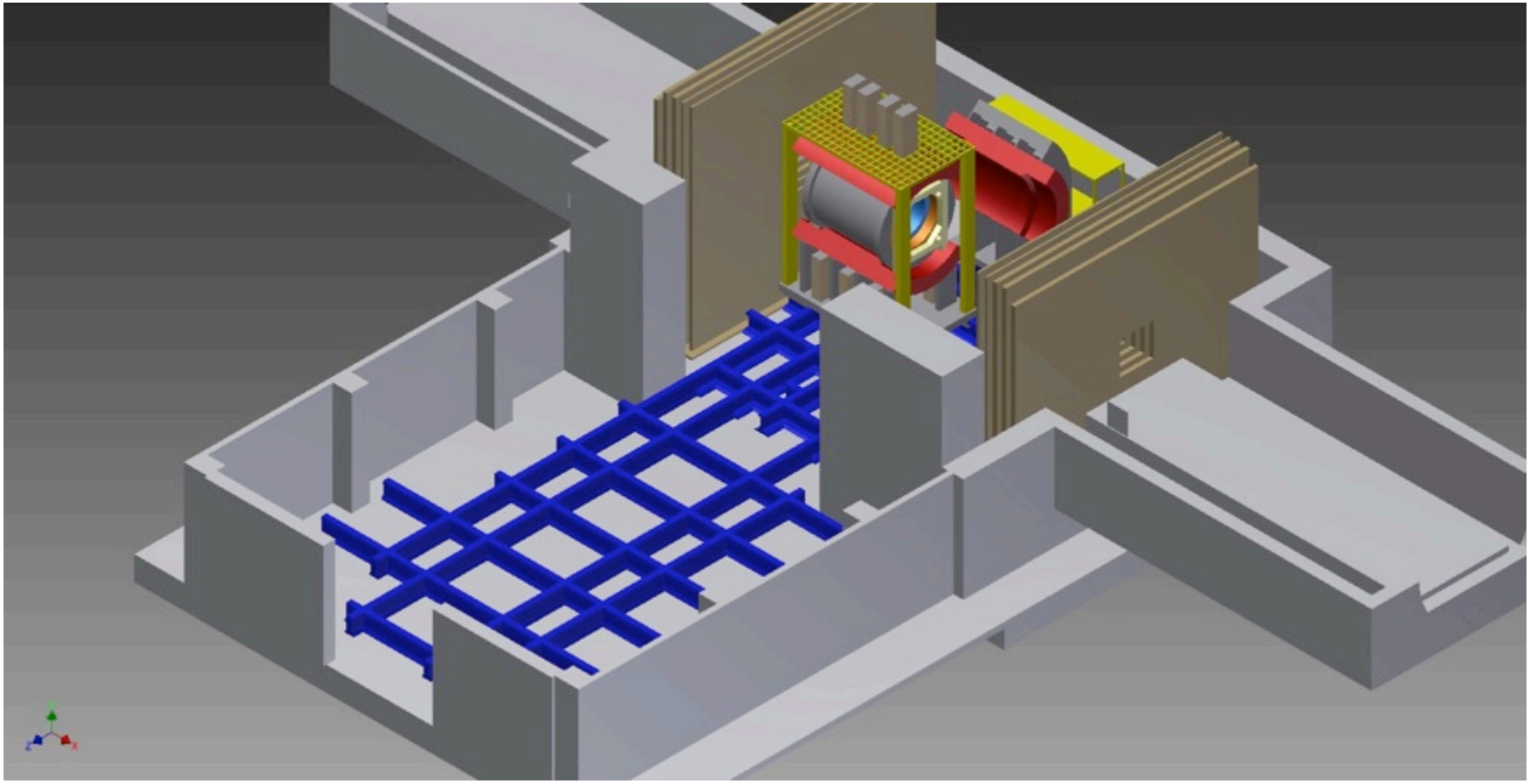

Global assembly Plan

The East carriage assembled in 1008 AH with platforms for racks

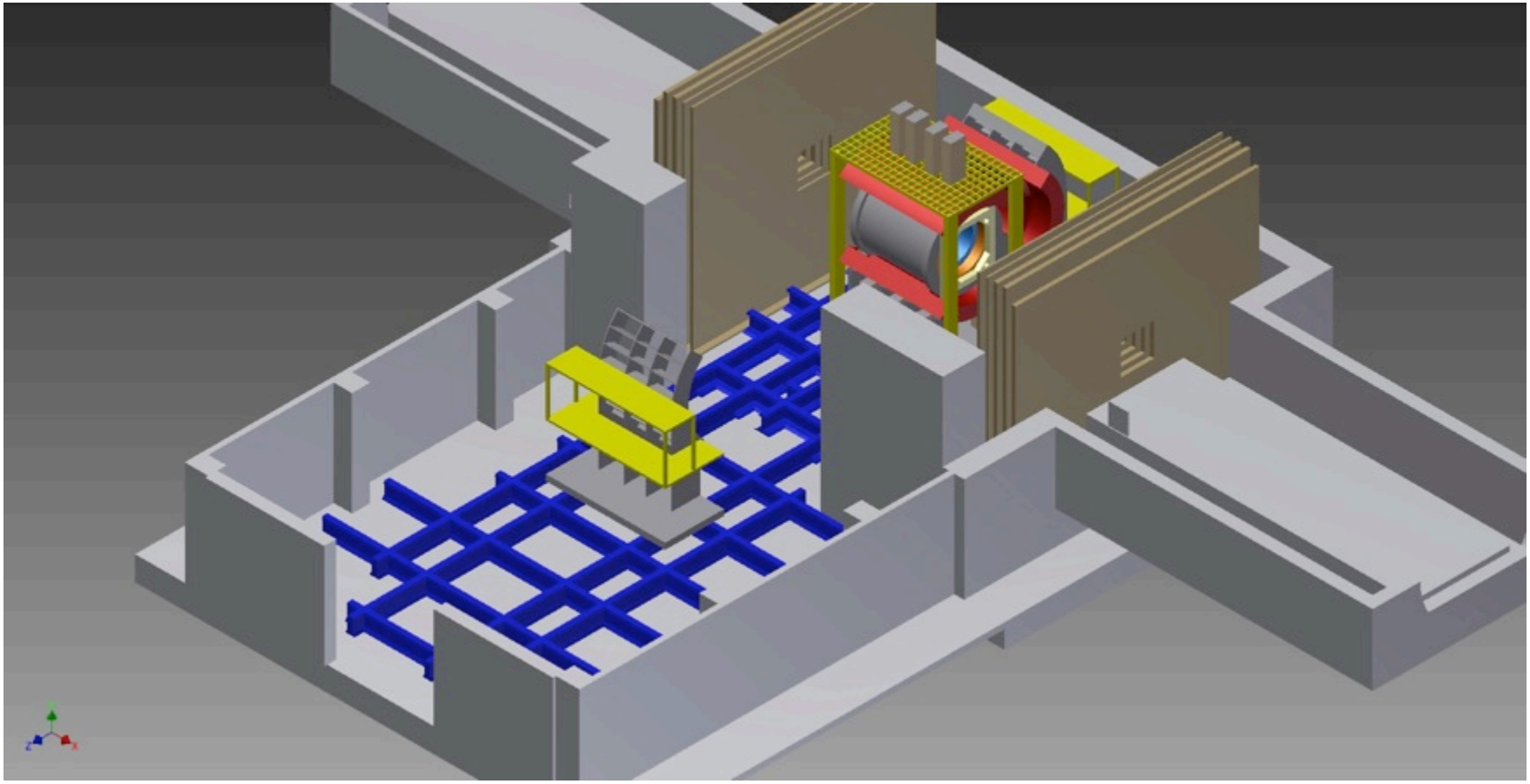

Global assembly Plan

HCAL brought to 1008 AH

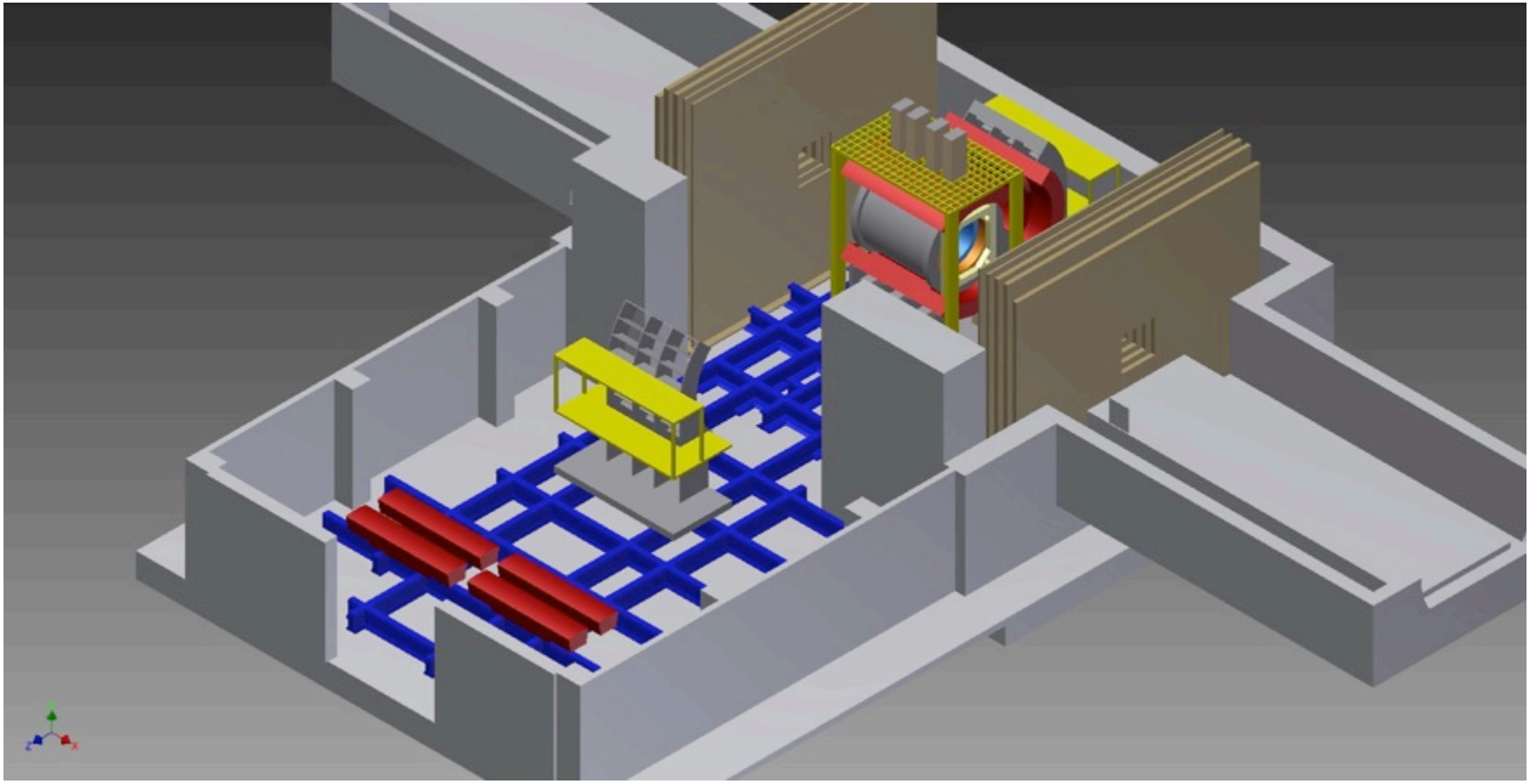

Global assembly Plan

HCAL installed onto EC

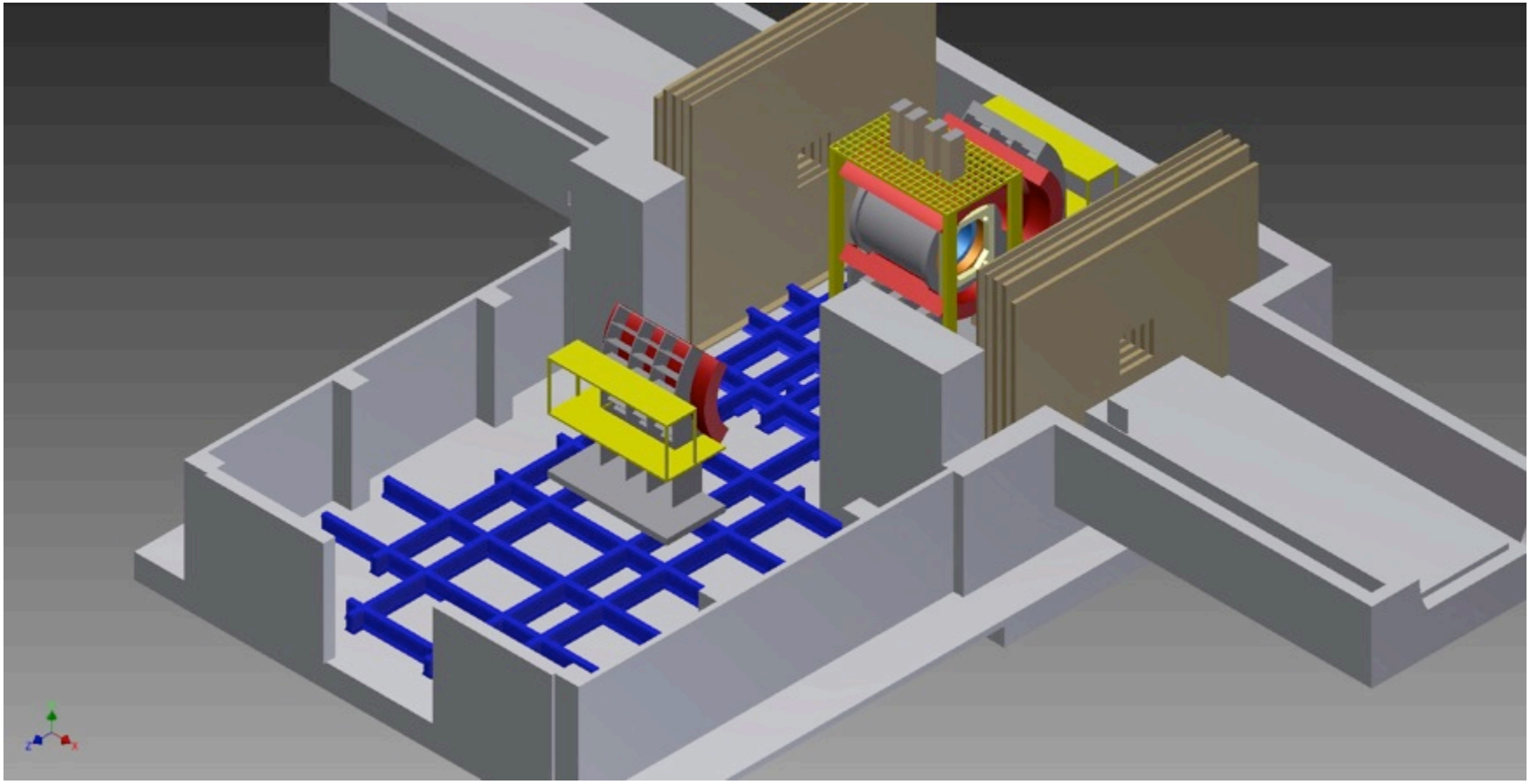

Global assembly Plan

Racks and cable routed on EC

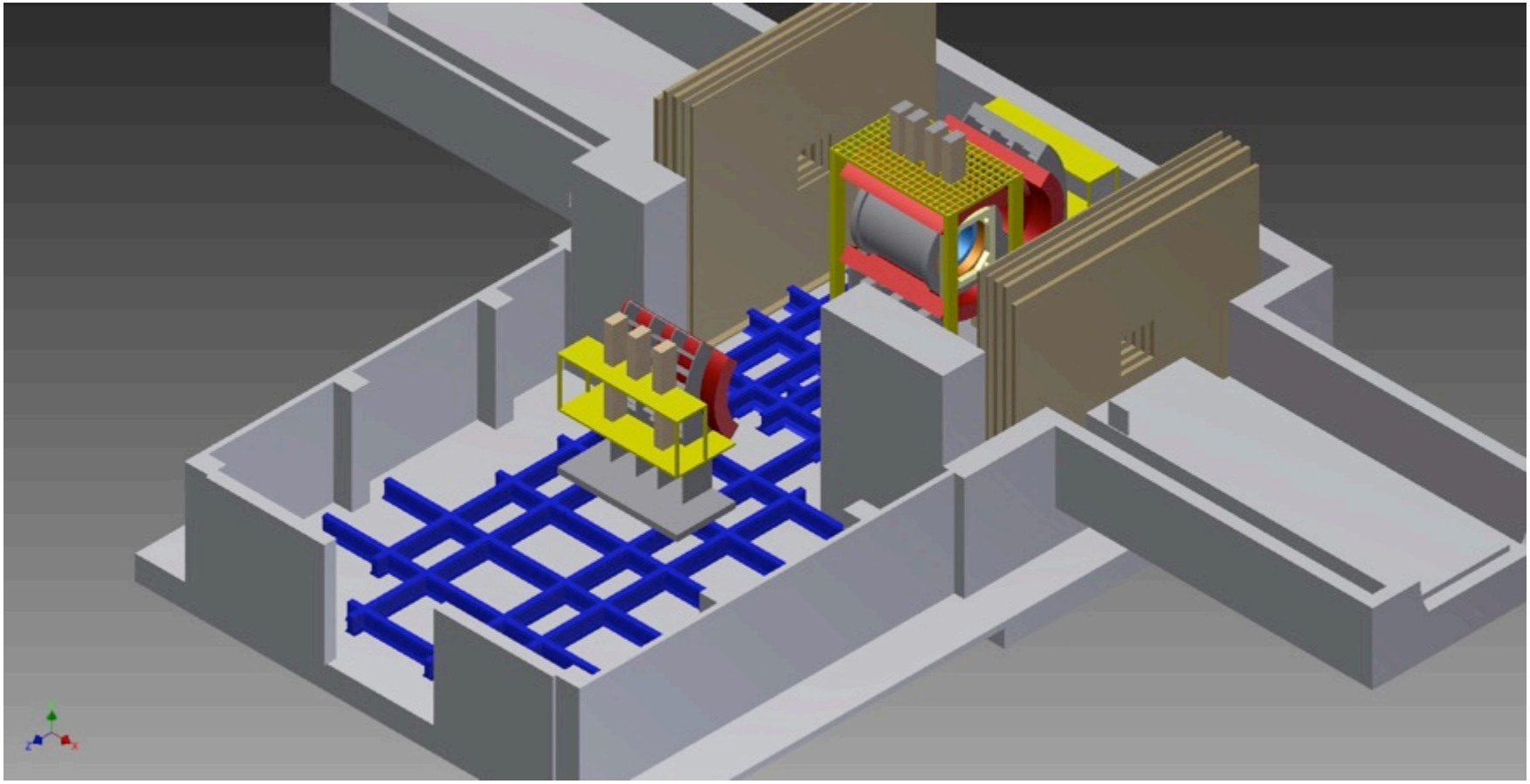

NOTE: The number of racks on the EC does not necessarily represent the number of racks we will have

Global assembly Plan

EC moved into IR

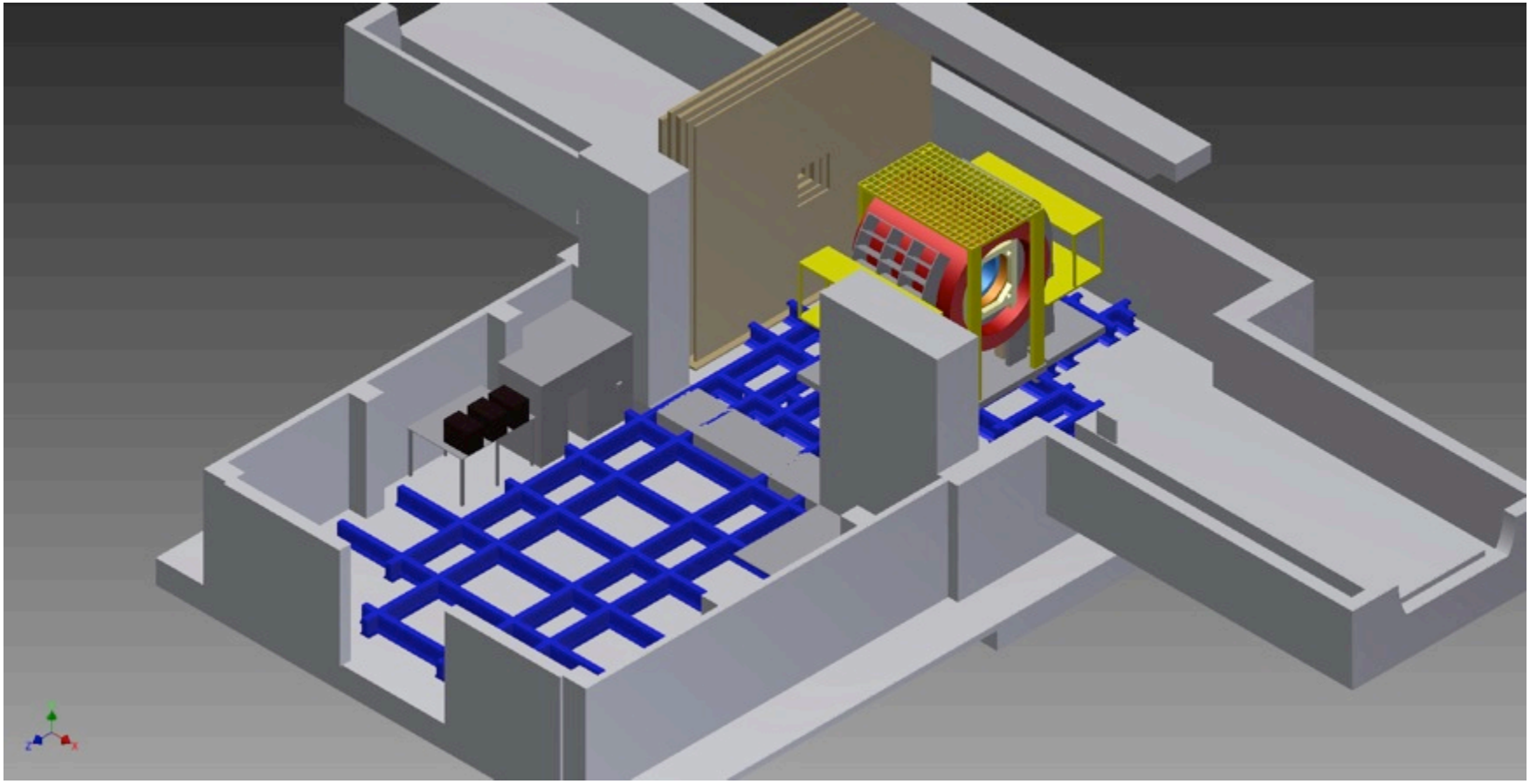

sPHENIX Management & Progress

- Magnet – revised shipping fixtures in Central Shops
- WBS Tasks for subsystem Managers – sample (HCal) for input info by next week

WBS/Task #	WBS Item/Task	Duration (Days)	Materials needed & Costs	Scientist (m/d)	Engineer (m/d)	Designer (m/d)	Technician (m/d)	BNL Trades (m/d)	Task Description	Notes (caveates, Potential Problems), Etc
1.06	HCAL									Schedule starts from 6/1/14 Ready for 1st Run 12/31/20
1.06.01	Inner HCAL									
1.06.01.01	Inner HCal Design									
1	SubSystem Design									Includes Assembly, sub-assembly, outline, cable routing drawings, and mechanical interface drawings
2	Detail -SS Plates									Includes detail drawings of inner plates outer

- Subsystem areas:
  - Management
  - Decommissioning
  - Magnet
  - Tracking (Inner & Outer)
  - EMCal
  - HCal (Inner & Outer)
  - Calorimeter Electronics
  - DAQ & Trigger
  - Infrastructure
  - Installation & Integration

Global Schedule to be derived from WBS Task Info

WBS Number	Description
1	sPHENIX Detector Upgrade Project
1.01	Management
1.01.01	Project Management and Coordination
1.01.02	Project Management/Coordination Support
1.02	Decommissioning
1.02.01	Preparation and Oversight
1.02.02	Disassembly and Disposition
1.02.03	Production ???
1.03	Magnet
1.03.01	Magnet Ancillary Systems Design
1.03.02	Magnet Ancillary Systems Production
1.03.03	Magnet Installation/Testing
1.04	Tracking
1.04.01	VTX Reconfiguration
1.04.01.01	Inner Tracking Design
1.04.01.02	Inner Tracking Production
1.04.01.02.01	Inner Tracking Ladder Modification
1.04.01.02.02	Inner Tracking Ladder Testing/Calibration/Integrat
1.04.01.03	Inner Tracking Production/Assembly
1.04.02	Outer Tracking Layers
1.04.02.01	Outer Tracking Layer Design
1.04.02.02	Outer Tracking Layer Prototype
1.04.02.02.01	Outer Tracking Prototype v1
1.04.02.02.02	Outer Tracking Prototype v2
1.04.02.02.03	Outer Tracking Preproduction prototype
1.04.02.03	Outer Tracking Layer Production
1.04.02.03.01	Outer Tracking Ladder Production
1.04.02.03.02	Outer Tracking Ladder Assembly
1.04.02.03.03	Outer Tracking Ladder Testing/Calibration/Integrat
1.05	EMCAL
1.05.01	EMCal Design
1.05.02	EMCal Prototype
1.05.02.01	EMCal Prototype v1
1.05.02.02	EMCal Prototype v2
1.05.02.03	EMCal Preproduction Prototype
1.05.03	EMCal Production
1.05.03.01	EMCal Module Production
1.05.03.02	EMCal Module Assembly
1.05.03.03	EMCal Module Testing/Calibration/Integration
1.06	HCAL
1.06.01	Inner HCAL
1.06.01.01	Inner HCal Design
1.06.01.02	Inner HCal Prototype
1.06.01.02.01	Inner HCal Prototype v1
1.06.01.02.02	Inner HCal Prototype v2
1.06.01.02.03	Inner HCal PreProduction Prototype
1.06.01.03	Inner HCal Production
1.06.01.03.01	Inner HCal Module Production
1.06.01.03.02	Inner HCal Module Assembly
1.06.01.03.03	Inner HCal Module Testing/Calibration/Integration
1.06.02	Outer HCAL
1.06.02.01	Outer HCal Design
1.06.02.02	Outer HCal Prototype
1.06.02.02.01	Outer HCal Prototype v1
1.06.02.02.02	Outer HCal Prototype v2
1.06.02.02.03	Outer HCal PreProduction Prototype
1.06.02.03	Outer HCal Production
1.06.02.03.01	Outer HCal Module Production
1.06.02.03.02	Outer HCal Module Assembly
1.06.02.03.03	Outer HCal Module Testing/Calibration/Integration
1.07	Calorimeter Electronics
1.07.01	Calt Sensors
1.07.01.01	Calt Sensor Specification
1.07.01.02	Calt Sensor Procurement
1.07.01.03	Calt Sensor Procurement
1.07.02	Calt On-Detector Electronics
1.07.02.01	Calt Fee Design
1.07.02.02	Calt Fee Prototype
1.07.02.02.01	Calt Fee Prototype v1
1.07.02.02.02	Calt Fee Prototype v2
1.07.02.02.03	Calt Fee Preproduction prototype
1.07.02.03	Calt Fee Production
1.07.03	Calt Digitizer System
1.07.03.01	Calt FEM Design
1.07.03.02	Calt FEM Prototype
1.07.03.02.01	Calt FEM Prototype v1
1.07.03.02.02	Calt FEM Prototype v2
1.07.03.02.03	Calt FEM Preproduction Prototype
1.07.03.03	Calt FEM Production
1.08	DAQ and Trigger
1.08.01	DAQ
1.08.01.01	DAQ Design
1.08.01.02	DAQ Prototype
1.08.01.03	DAQ Production
1.08.02	Trigger
1.08.02.01	Trigger Design
1.08.02.02	Trigger Prototype
1.08.02.03	Trigger Production
1.09	Infrastructure
1.09.01	Infrastructure System Design
1.09.02	Infrastructure System Production
1.1	Installation and Integration
1.10.01	Integration Management and Technical Coordination
1.10.02	Tooling/Fixtures/Procedures Design and Production
1.10.03	sPHENIX Installation

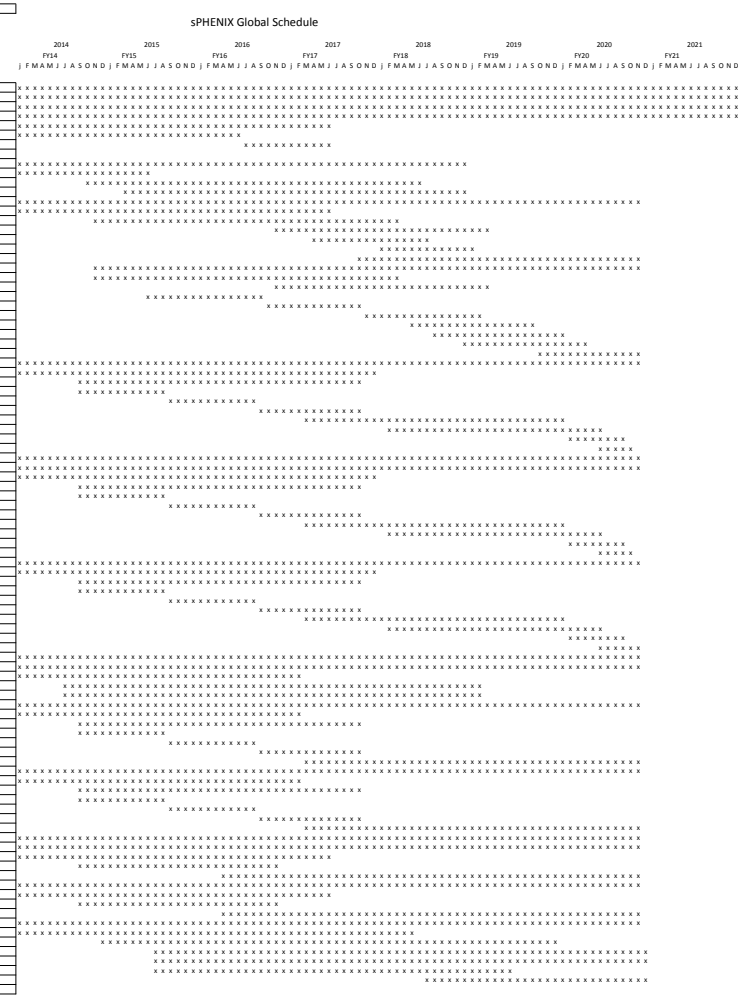
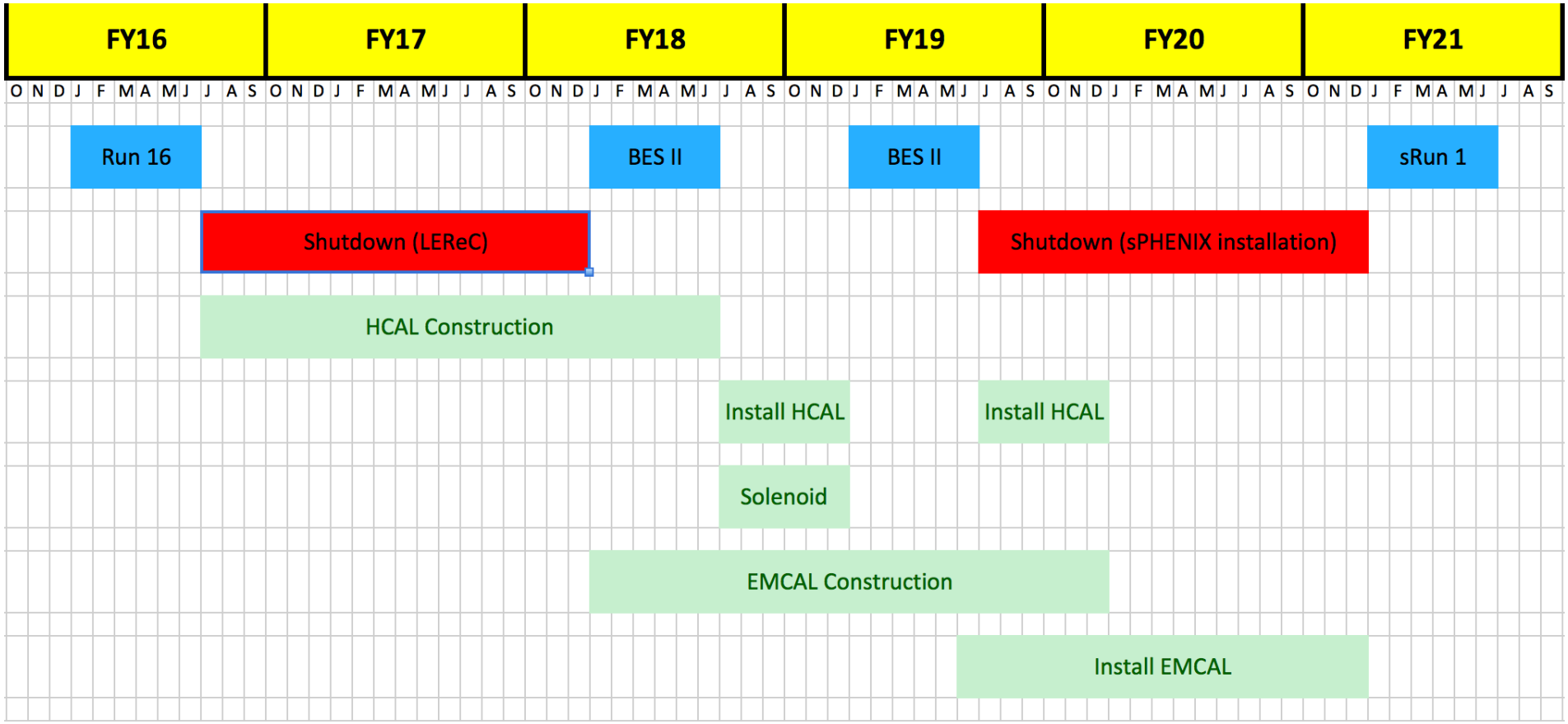
sPHENIX schedule