SPHENIX MECHANICAL

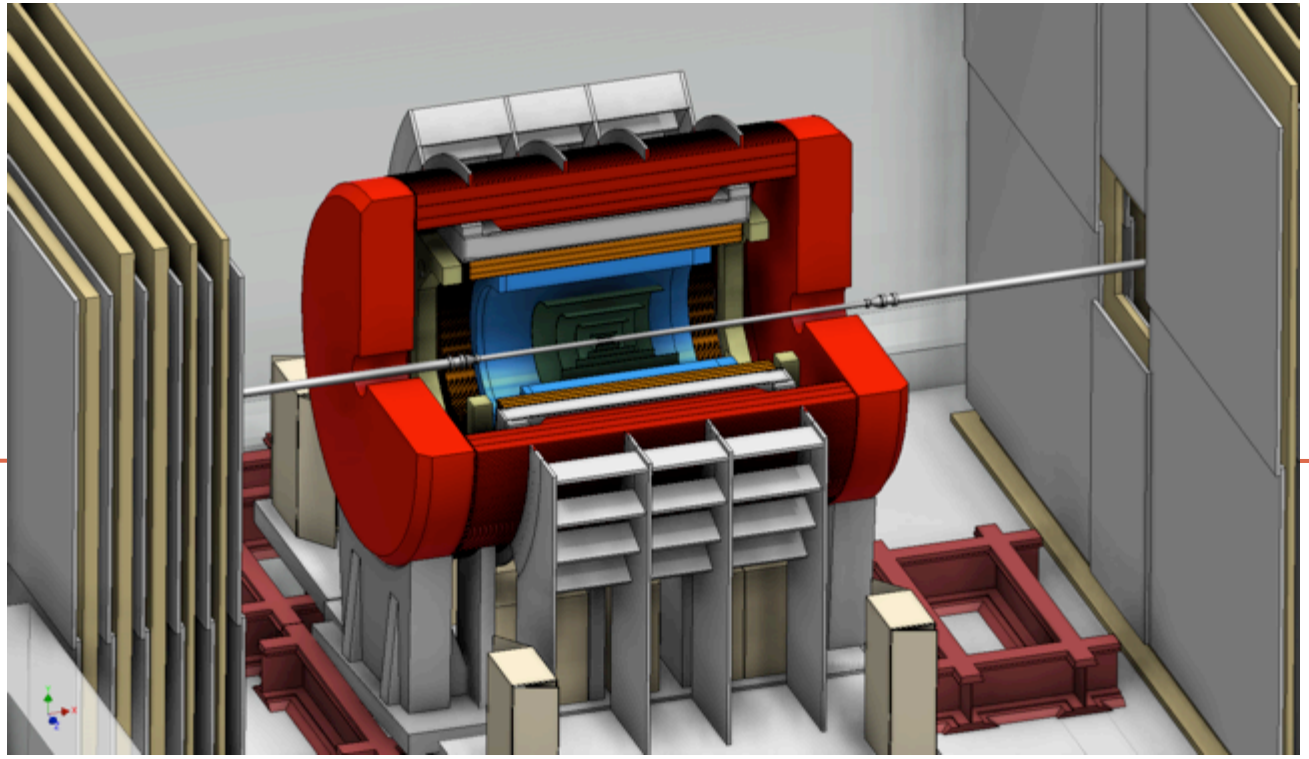

D. Lynch & R. Ruggiero

July 31, 2014

AGENDA:

- Magnet update
- sPHENIX Design Update
- sPHENIX Infrastructure update
- PHENIX Decommissioning Plan update
- sPHENIX Tasks & Schedule
- AOB

BABAR Magnet Update

- Meeting yesterday at magnet division to discuss shipping
  - Shipping fixtures for magnet OK
  - Need shipping fixtures for valve box, Paul Kovach has potential design
- Need a transportation and handling review at CAD

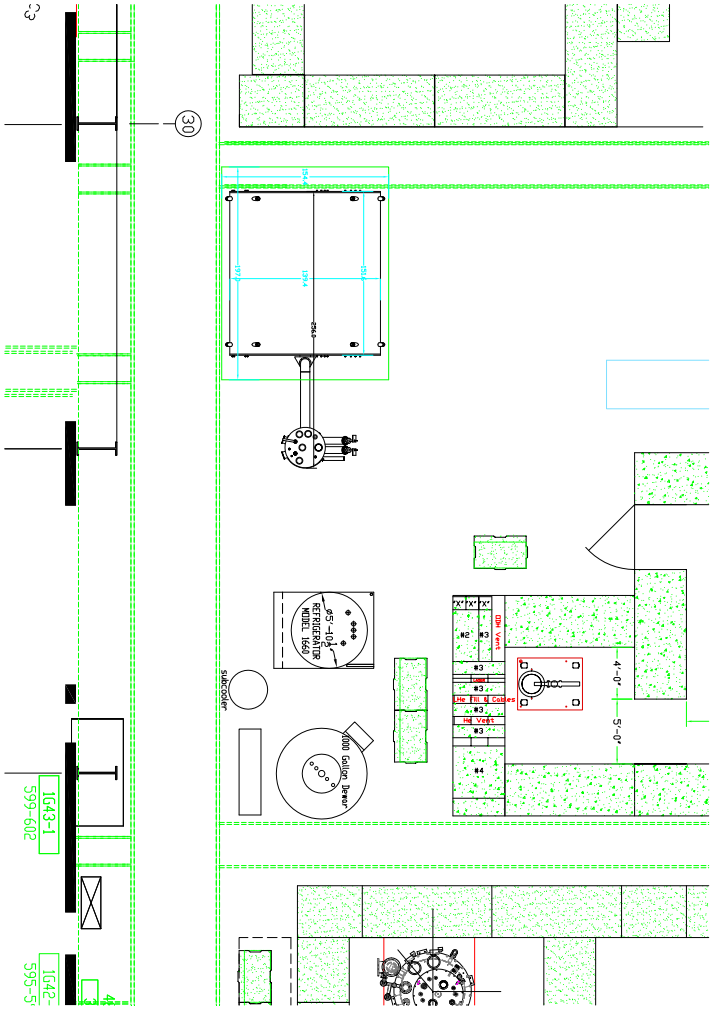
30
1643-1
599-602
1642-
595-5
subcooler
6000 Gallon Dewar
#2
#3
#4
He Fill & Collect
He Vent
4'-0"
5'-0"

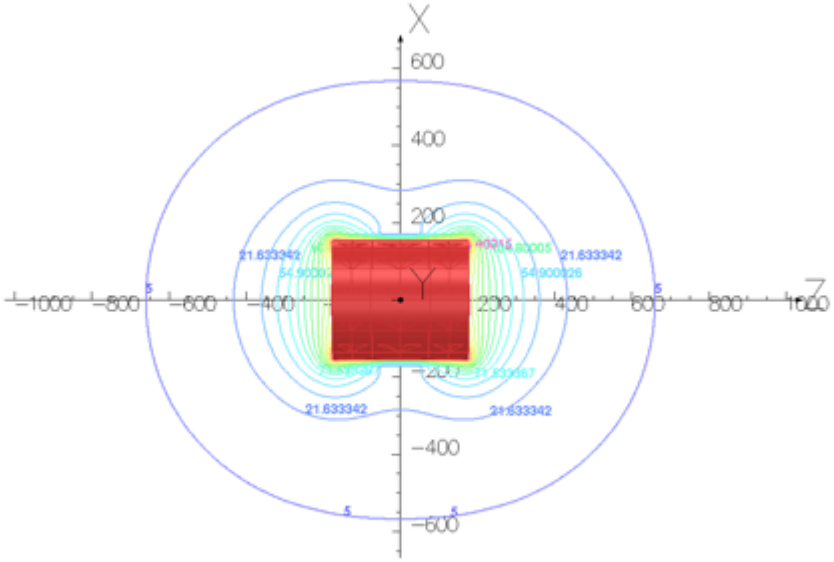
X
Y
Z
600
400
200
-200
-400
-600
-1000
-800
-600
-400
200
400
600
800
1000
21.633342
54.900026
Map contours: B
5.000000E+00 to 3.210335E+02
Integral = 5.928232E+07

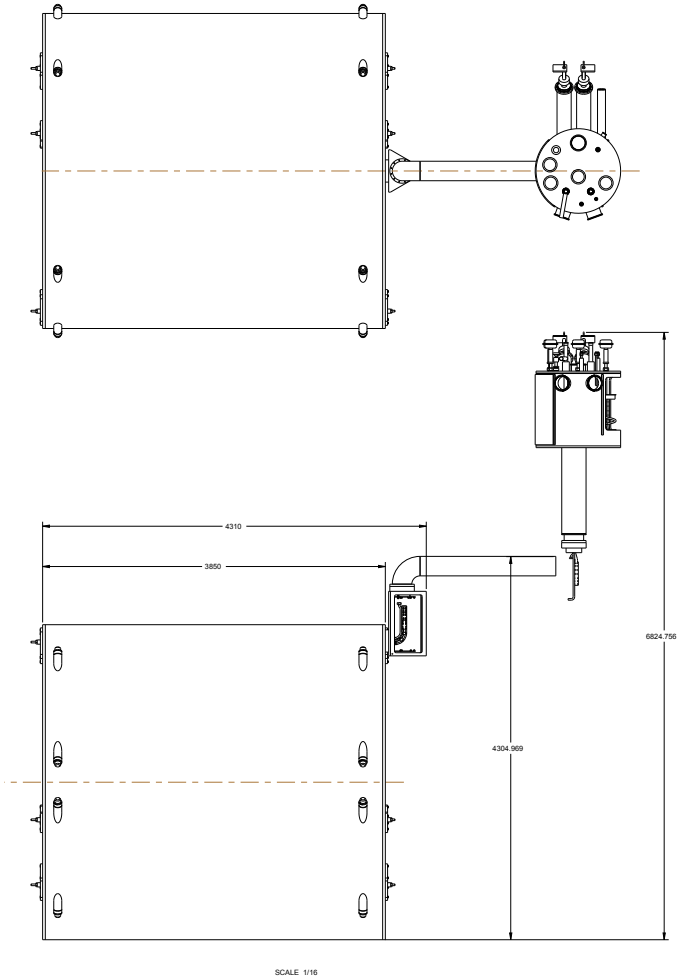
4310
3850
6824.756
4304.969
SCALE 1/16

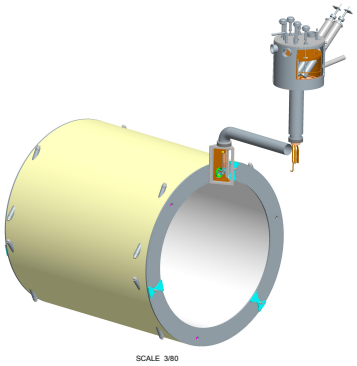
SCALE 3/80

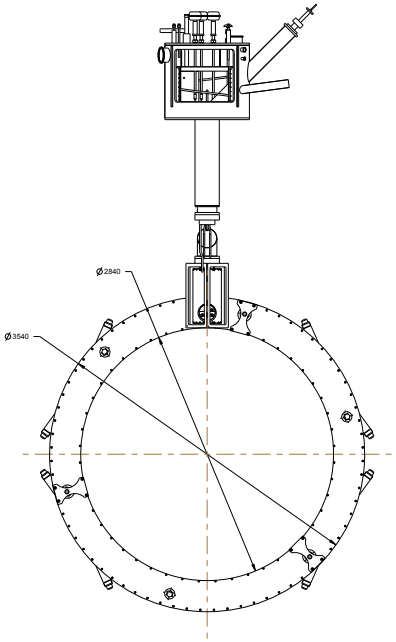
Ø2840
Ø3540

- sPHENIX Design Update: No change to envelope since last meeting

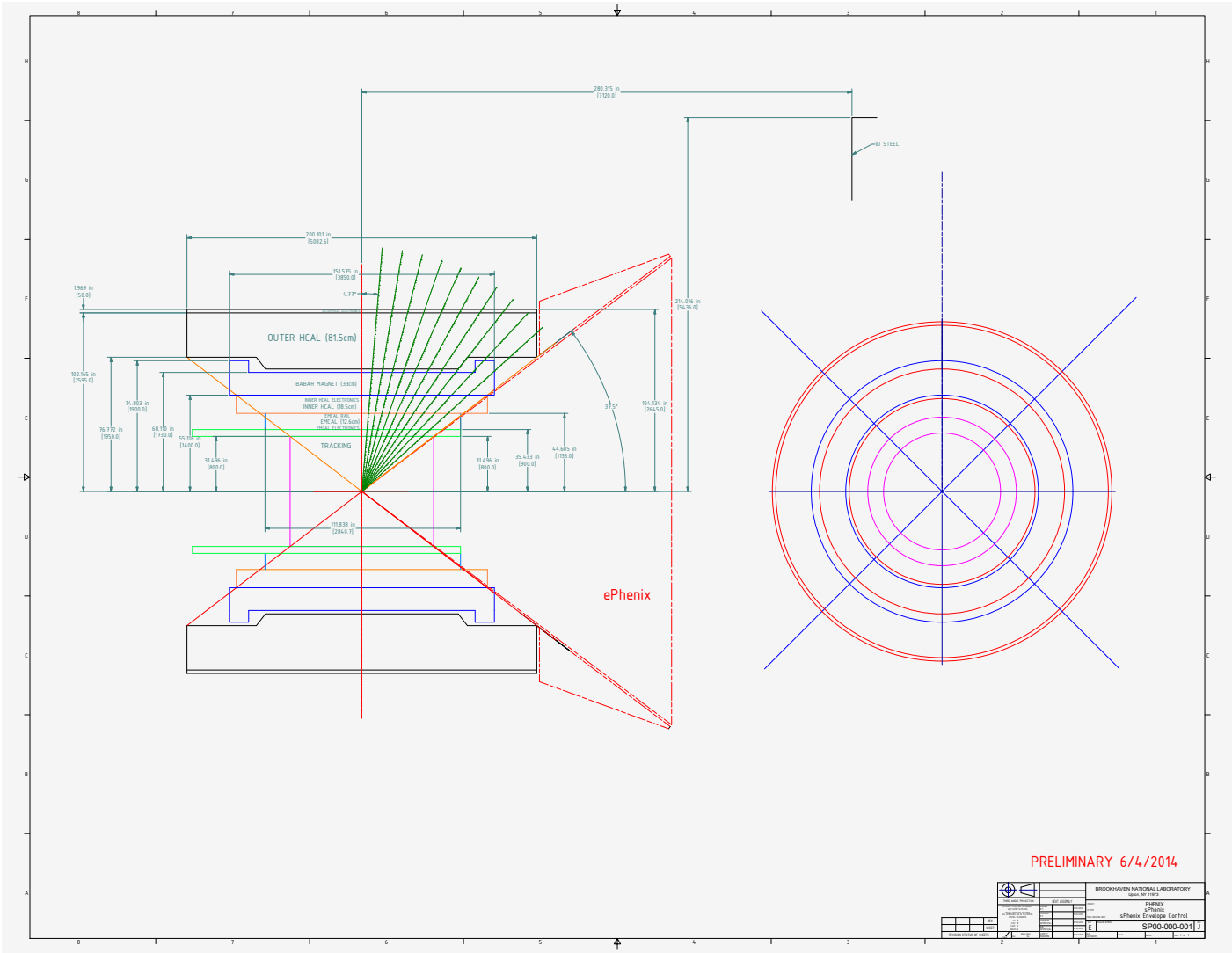

sPHENIX EMCal Envelope

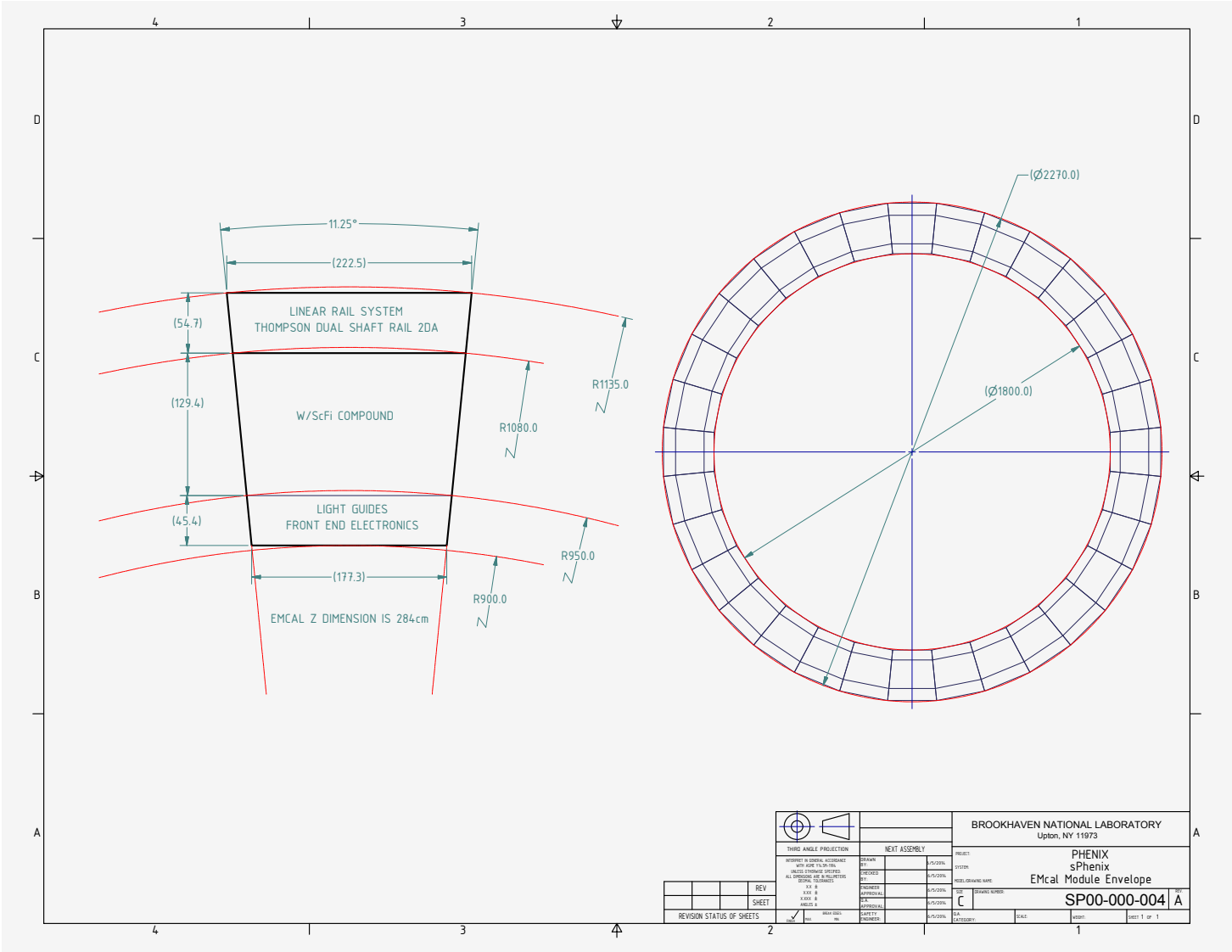

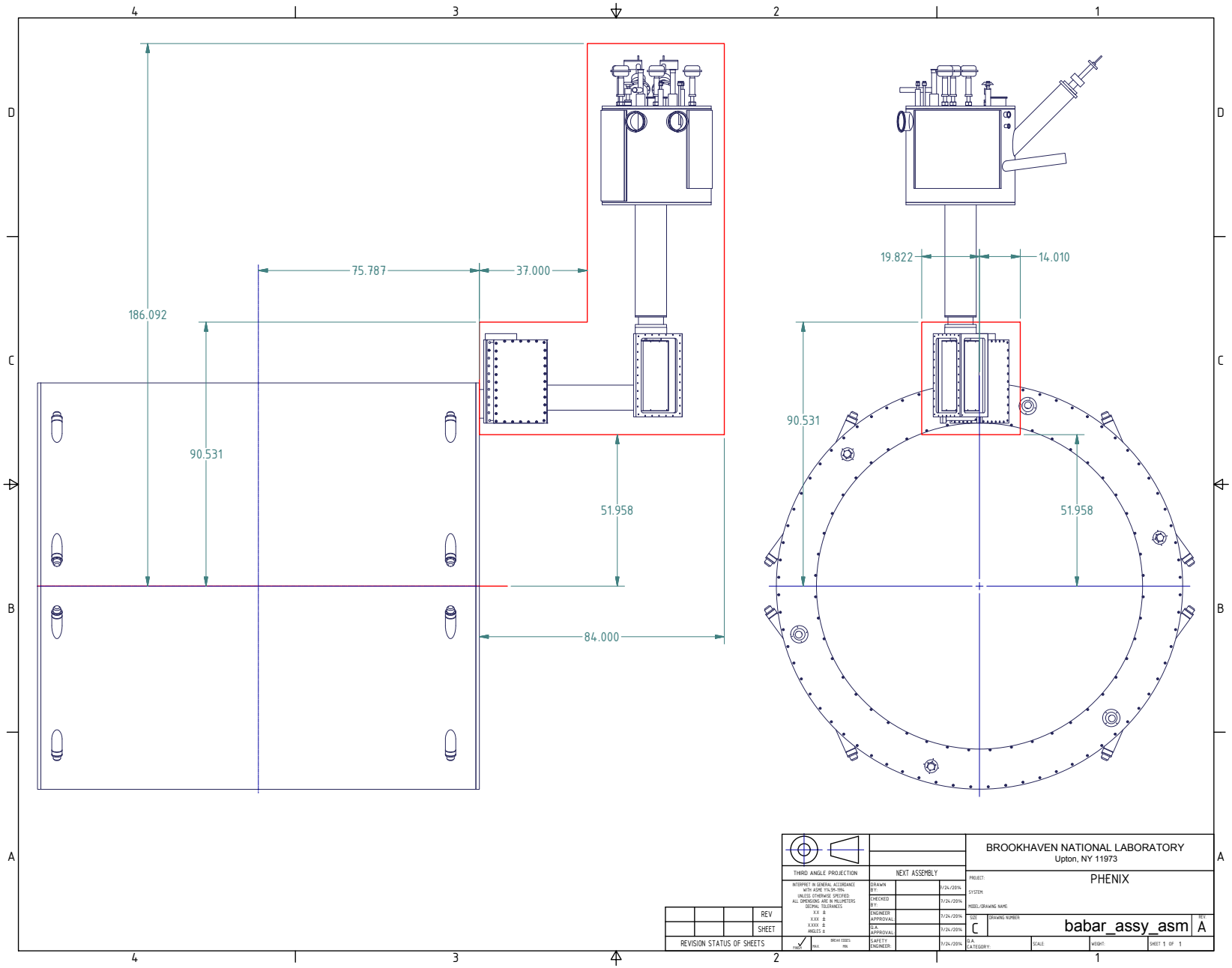
186.092
75.787
37.000
90.531
51.958
84.000
19.822
14.010
90.531
51.958
BROOKHAVEN NATIONAL LABORATORY
Upton, NY 11973
THIRD ANGLE PROJECTION
NEXT ASSEMBLY
PHENIX
babar_assy_asm
A
C
REV
SHEET
REVISION STATUS OF SHEETS

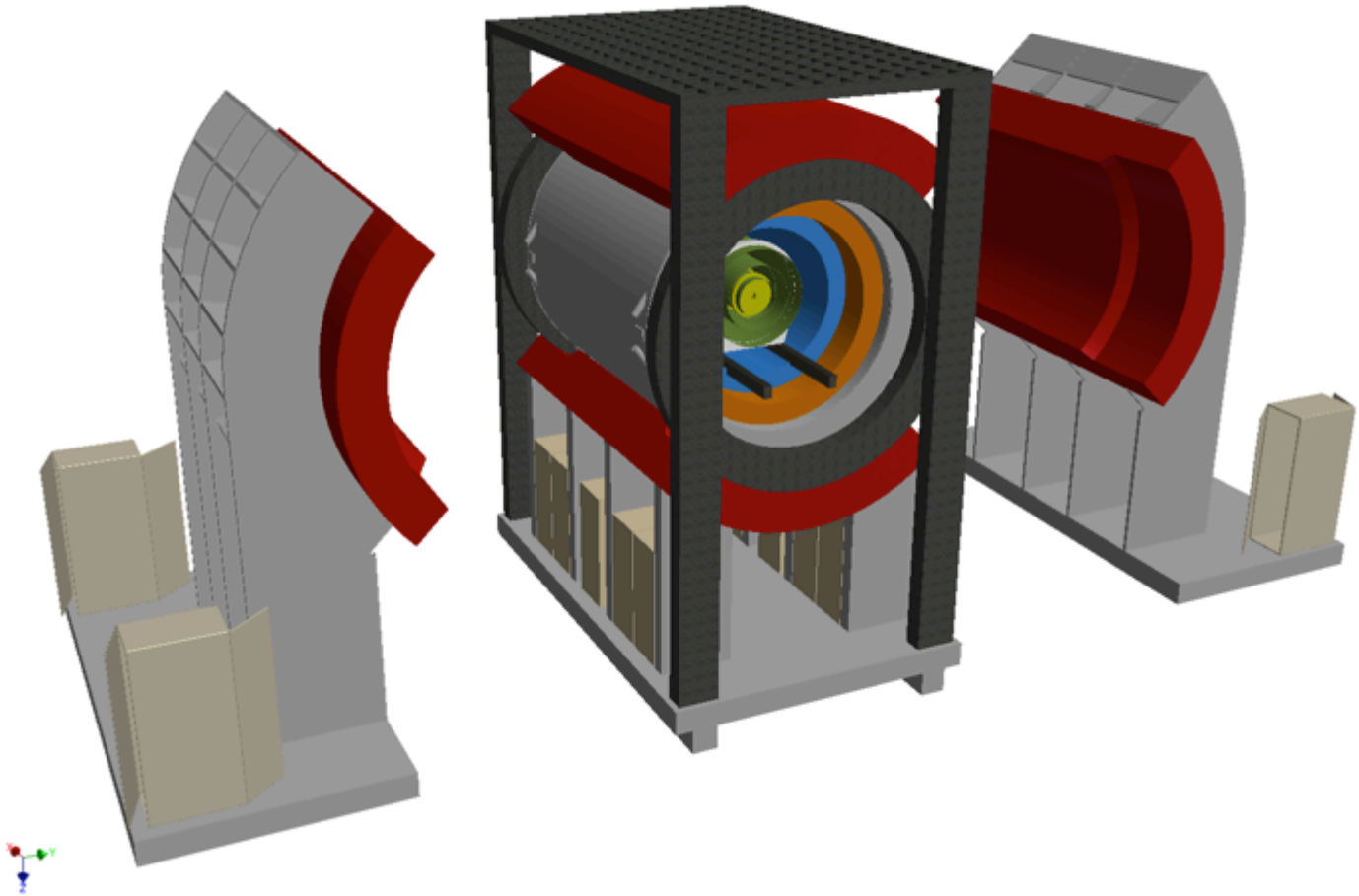

Initial concept for external support,
racks and upper bridge platform

Design efforts over the next few months will include several areas of emphasis:

(a) incorporating a more detailed flux return (cap) design
(b) Firm up detector subsystem specifications and design
(c) Support structure design and analyses
(d) Infrastructure and support system design and analyses
(e) Magnet acquisition testing and design of modifications

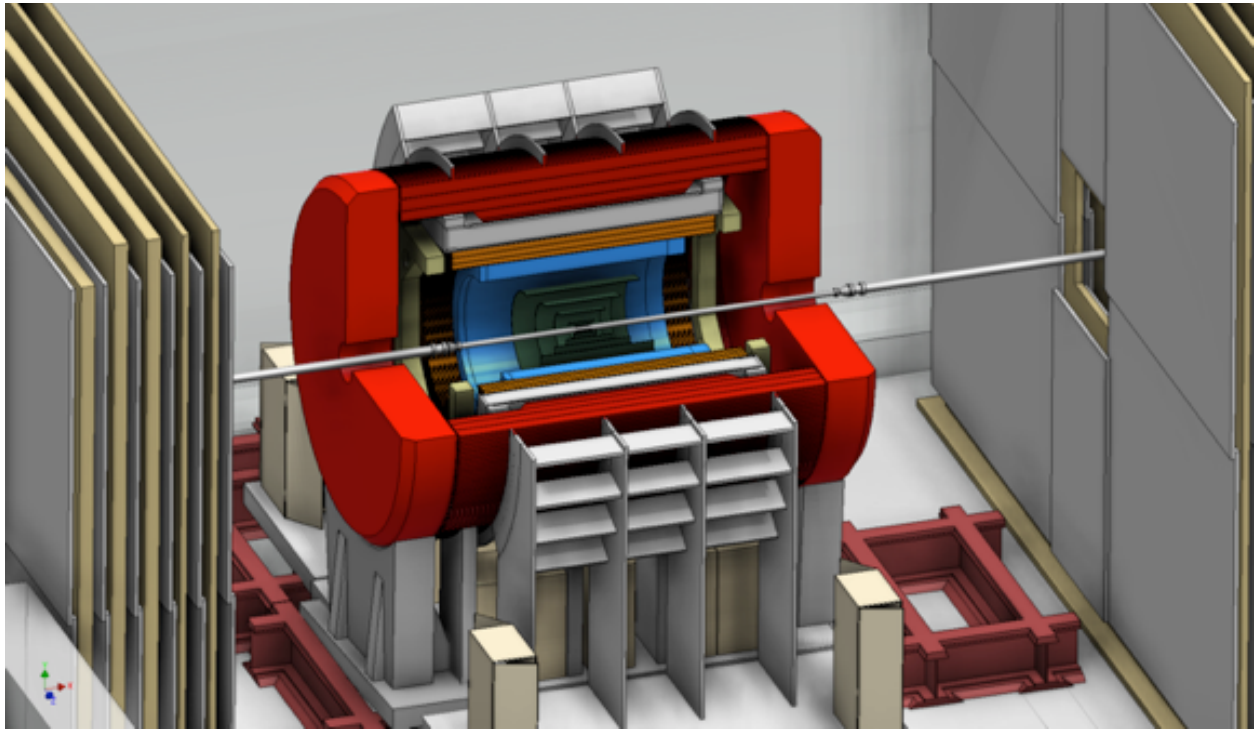

Basic sPHENIX model cutaway (updated)

sPHENIX Infrastructure update

Power Supply Infrastructure

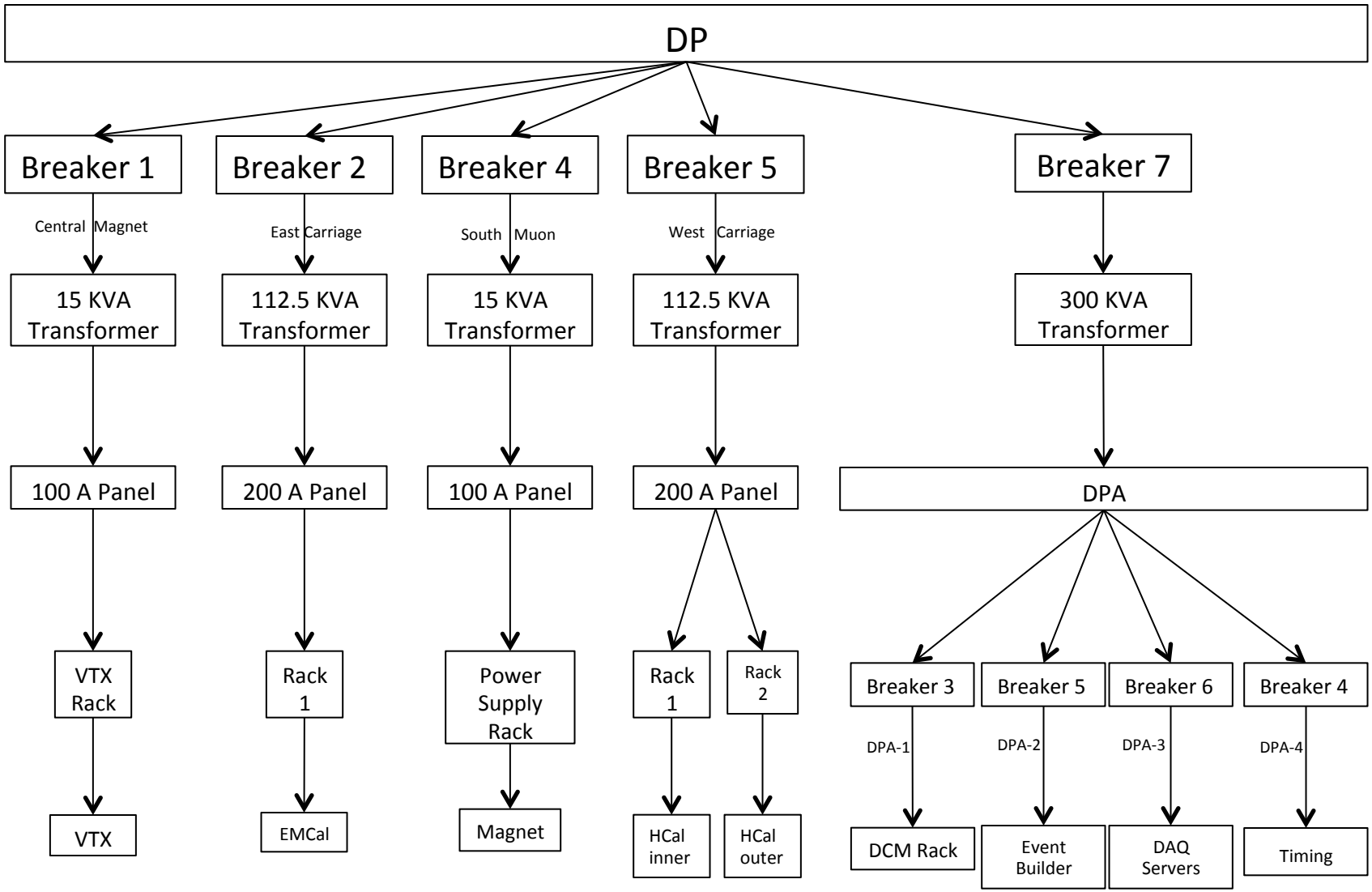

Safety System

Existing Infrastructure Changes

- Remove flammable gas detectors
- Convert from Relay logic to PLCs?
- PHENIX Control Room upgrade for helium sensors and monitoring
- CAD PASS system upgrade due to use of Liquid He in IR

If signal trips alarm for….

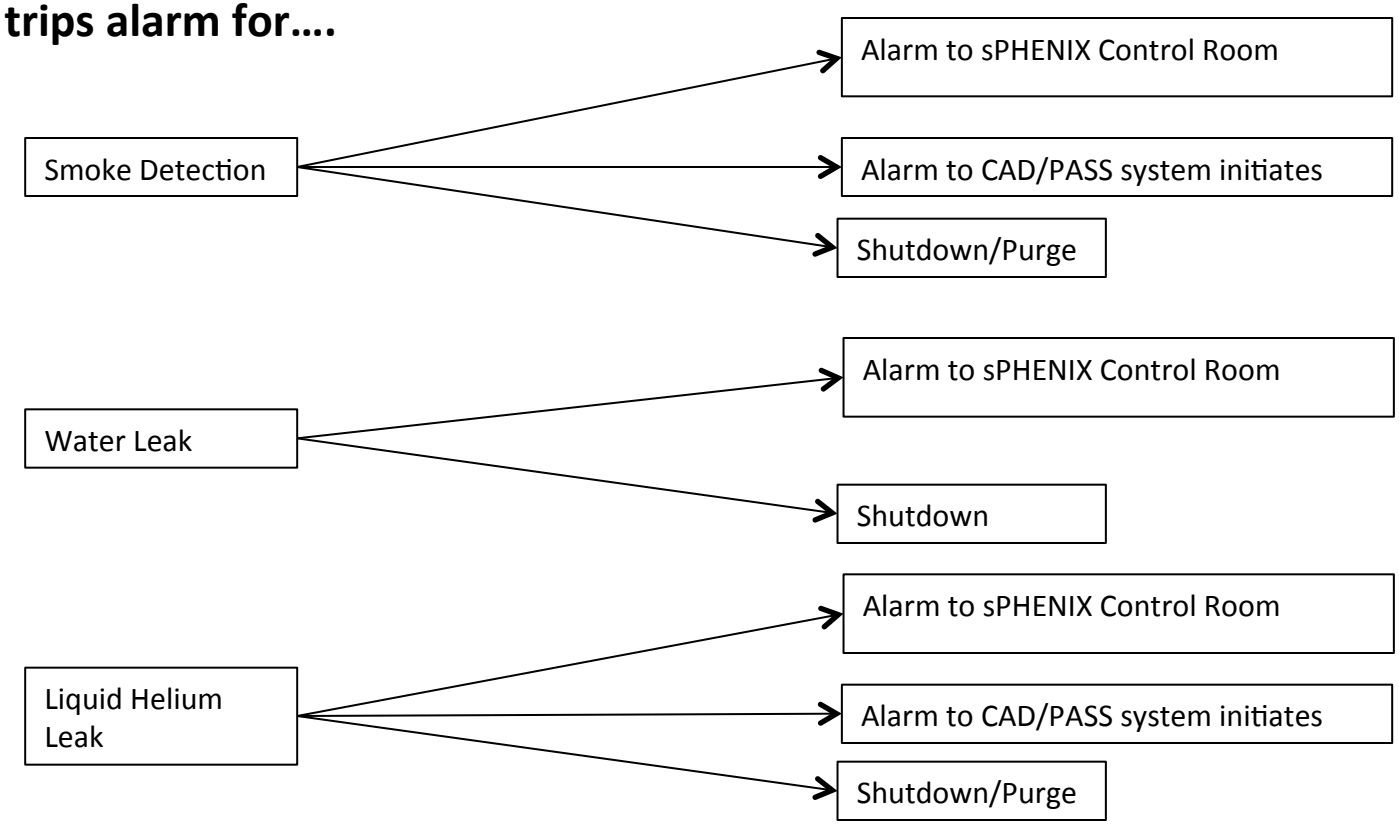

Existing Water Cooling Infrastructure

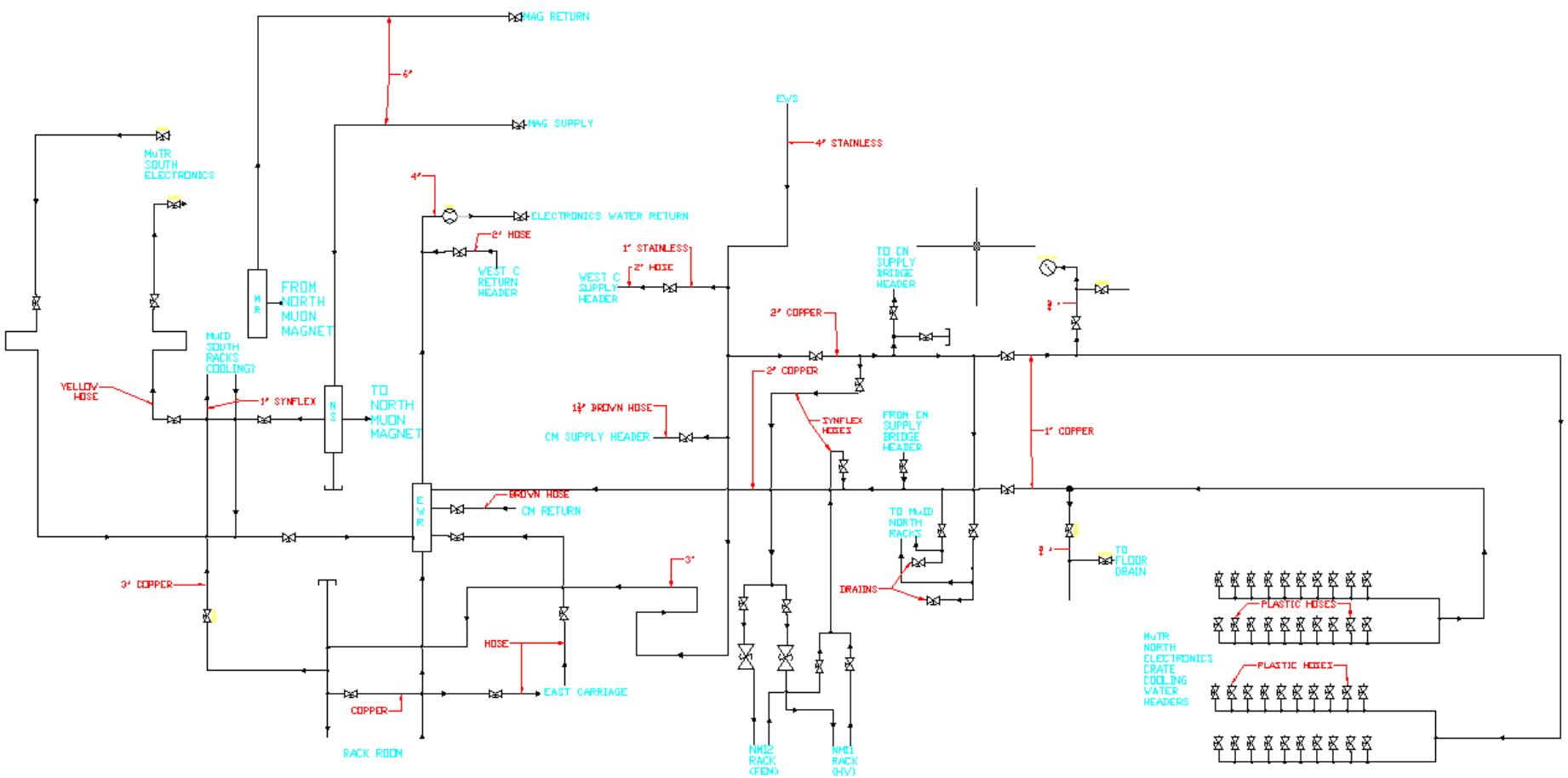

PHENIX Decommissioning Plan update

PHENIX Decommissioning Procedure

- In order to decommission, we need to know how the detectors were installed, what work permits are required, how long it will take, drawings of detectors/lifting fixtures, and most importantly which lifting fixtures were used for each detector.
- The following spreadsheet organizes all of these.

Detectors	Procedures	Estimated Time of Disassembly	Work Permits	Drawings	Lifting Fixtures & Equipment
Drift Chamber	**Installation Procedure:** Attach two 20-Ft slings from the crane to the Drift Chamber's rear mount holes. Adjust one chain fall to 20-Ft length and attach this chain fall between the front central lift point and the crane. Lift crane to tension slings and remove mount pins holding the DC to rolling table. Lift detector and place on PHENIX cart, remove rigging gear and transfer it to the 12-Ton crane in the collision hall. Re-attach rigging gear and lift the detector from the cart in the collision hall using the 12-Ton crane. Place detector in park position on the south tracks. Move the PHENIX central magnet east to allow clear access for the second part of the lift and to allow the magnet to serve as a secure point suring the DC/PC lift. Attach the two 20-Ft slings to the DC rear mount holes, adjust one chain fall to 20-Ft length, attach this chain fall to front central lift point and crane hook, attach second chain fall to the front lift point of the DC, position DC so front mounting pins may be inserted. Raise the front chain fall so the front edge of the DC is lifted vertically, adjust crane to keep drum directly above the hook, adjust vertical to bring the DC back to horizontal, continue until rear slings fall slack. Remove rear slings from rear detector mount points. Attach the free end of the second chain fall to the central magnet or tracks for support. Rotate DC/PC about the front mounting pins by raising the crane or the first chain (crane hook) and slackening the second chain fall (central magnet) to bring the chamber to its upright position. Once rear detector mount points align, insert mount pins. Use the manlift to gain access, remove all slings and chain falls from the crane and DC. (PP-2.5.3.4-09) **Decommissioning Procedure:** Cut all wires and gas lines, move forward on rails, lift off with crane, lay flat on cart, dismantle, outside film to take structural titanium, rest in dumpster.	4 Days, 8 CAD Tech Days	**ne-20002-006** (Replace regulator on DC/PC gas rack in mixing house)(12/18/2002-12/18/2002) **2003-003/SS2003-0026** (Drift Chamber Repair:cm Lift Table)(1/17/2003-1/23/2003) **ne-2003-007** (Replace Drift Chamber power supplies)(11/19/2003-11/21/2003) **2004-001/TS04-1** (Troubleshoot & Repair DC Electronics)(2/17/2004-3/31/2004) **2004-006/SS-2004-078** (DC Power supply Repair)(5/25/2004-8/15/2004) **2004-008/SS-2004-107** (Erect DC Repair Tent)(6/29/2004-8/10/2004) **2005-001/SS-2005-054** (DC Repairs)(2/14/2005-4/1/2005) **2005-003/SS-2005-090** (DC Cable Repairs)(4/6/2005-4/15/2005) **2005-006/SS-2005-098** (DC Repairs)(6/24/2005-8/31/2005) **07-006/DRL-2007-006** (DC East & West repairs)(2/9/2007-2/15/2007) **07-024/DRL-2007-023** (DC East & West repairs)(10/5/2007-12/31/2007) **08-001/SS-2008-113** (Tap into DC supply in a way to flow either 50/50 Ar/Ethane or 50/50 Ar//Ethane +1%acetone)(1/22/2008-1/28/2008) **DRL-2009-3** (DC Repairs)(1/8/2009-2/4/2009) **DRL-2009-15** (DC East Repair)(9/24/2009-10/12/2009) **DRL-2009-18** (DC East_West Repairs)(11/16/2009-12/16/2009) **DRL-2010-19** (DC East & West Troubleshooting & Repairs)(12/10/2010-1/11/2011) **DRL-2011-003** (DC East & West Troubleshooting & Repairs)(1/13/2011-1/31/2011) **DRL-2011-020** (DC East & West Troubleshooting & Repairs at the start of run 12)(11/4/2011-12/1/2011)	✓ (Carriage FAB Folder) (DC Cable Routing) (DC/PC Installation Procedure)	Slings (2): 20-ft, 6200-lb capacity in vertical configuration 40-Ton Assembly Hall Crane 12-Ton Collision Hall Crane 2 Chain Falls rated at or above 3000-Lb each
Pad Chamber 1/Pad Chamb	**Installation Procedure:** PC-1 installed with Drift Chamber, PC-3 installed with TEC. **Decommissioning Procedure:** Remove PC-1 from the back of DC, throw in dumpster. Disconnect PC-3 by cutting all services, unbolt and slide out the bottom, toss in dumpster.	4 Days, 8 CAD Tech Days	**ne-20002-006** (Replace regulator on DC/PC gas rack in mixing house)(12/18/2002-12/18/2002) **07-011/DRL-2007-011** (PC Electronics Repair work permit)(5/23/2007-6/30/2007) **DRL-2009-10** (PC1 Repair)(6/29/2009-9/24/2009) **DRL-2010-1** (PC1EN1 Troubleshooting)(1/21/2010-1/28/2010) **DRL-2010-22** (PC1 East and West Troubleshooting & Repairs)(7/20/2010-11/24/2010) **DRL-2011-014** (PC1 Repairs)(6/29/2011-12/15/2011)	✓ (PC-1 Cable Routing) (PC-3 Cable Routing) (PP-2.5.3.4-09, DC/PC Installation Procedure) (PP-2.5.3.4-06, TEC/PC3 Installation Procedure)	PC-1: Since installed with the Drift Chamber, requires the same lifting fixtures. PC-3: Requires same lifting fixtures as TEC.
Ring Imaging Cherenkov De	**Installation Procedure:** Raise spreader bar above the RICH vessel and attach chain falls connected to double slings to the lifting frame's swivel shackles nearest the vessel's top, attach other two chain falls to lifting frame's swivel shackles nearest the vessel's bottom. Adjust chain falls to proper length to position spreader bar over vessel's CG. Lift vessel, move it to PHENIX detector carriage, align holes of vessel and carriage pivot mounts. Install pivot pins and one insulating washer. Lock each pivot pin in place. While maintaining vessel's position with crane, relieve tension on the chain falls nearest the pivots transferring the full load to the chain falls nearest the vessel top. Remove chain falls nearest the pivots from the lifting frame and spreader bar and secure the long slings from dangling freely. Relocate chain falls to have one end attached to slings looped around the upper transition plates and one end achored to the bottom of the carriage tracks or swivel shackle (2.5 ton) bolted to the floor. Slowly raise the vessel with the crane while, simultaneously lengthening the chain falls until vessel rests upon the rear mounts. Do not allow chain falls to become slack. Stabilize the vessel with two come-alongs each having one end chancored to the vessel and one to the carriage crossbar. Remove chain falls from transition plates and floor anchor. Reinstall chain falls to original position from spreader bar to lifting frame's lower swivel shackles. Position spreader bar over lifting frame CG. Tighten chain falls to assume load. Attach tag lines to lower end of lifting frame. Remove bolts attaching upper transition plates to vessel. Remove bolts attaching lower transition plates to vessel pivot. Remove come-alongs. Install stabilizing bars to top of vessel. (PP-2.5.3.4-01) **Decommissioning Procedure:** Cut service lines, unbolt RICH north and south, attach to crane at vessel's center of gravity, move to truck, move to staging area, salvage all PMT modules, dispose of all remaining parts .	(4 Days, 8 PHENIX Tech Days to strip out modules from RICH and dispose of remainder at staging area) (4 Days, 8 CAD Tech Days) Total = 8 days, 8 PHENIX Tech Days, 8 CAD Tech Days	**98-008** (Rotate RICH Detection) **98-009** (Remove Top of Tent) **99-011** (Remove Gas Vessel and Transport) **99-012** (Replace transition plates & pivots on RICH Vessel) **ne-1999-005** (Welding repair leaks in RICH vessel)(8/9/1999-8/9/1999)	✓ (Lifting I-Beam # 002-0207-033) (Pivot Pin dwg # 002-0501-303) (Insulating Washer dw # 002-0501-304) (Lifting Frame # 002-0207-019) (Upper Transition Plate dwg # 002-0207-018 Part 2) (Lower Transition Plate dwg # 002-0207-081) (Vessel Pivot dwg # 002-0501-300) (Vessel Stabilizing Bar dwg # 002-0207-082) (Detector Carriage Assembly dwg # 002-0501-001 & 001-0501-002) (Carriage Pivot dwg # 002-0501-301) (RICH Installation Procedure, PP-2.5.3.4-01)	(2) Pivot Pins, P/N 002-0501-303 Spreader Bar Chain Falls Doubled Slings Lifting I-Beam Swivel Shackles Load Cell Crane
Time Expansion Chamber	**Installation Procedure:** Position TEC sector 0 in PHENIX AH on TEC cart under 40-Ton crane hook.Attach swivel eyes to TEC sector plates. Attach 40-Ton crane hook to TEC 2-Ton lifting fixture and slings from lifting fixture to the swivel shackles on TEX sector plates. Configure for horizontal lift. Lift TEC sector off the cart and onto floor in 10008 resting the bottom of sector plates on 4" x 4"s. Remove weight from crane, disconnect slings, take TEC 2-Ton lifting fixture off crane hook, remove swivel eyes from sector plates. Lifts of sectors E1, E2, and E3 should repeat the previous procedures for removing each sector from TEC cart. Attach swivel eyes to sector plates, attach yellow 30-Ton lift beam to sector using 40-Ton crane hook and slings to be configured for vertical lift. Lift TEC sector off floor moving from horizontal to vertical position. Move sector to East Carriage. Place bottom of Aluminum sector plates on sector mounts. Bolt on and tighten all bolts to respective mounts. Remove weight from crane, disconnect slings and remove the swivel eyes. Adjust mount a bringing 80 to proper angle and position, attach two wire-rope turnbuckles between sector mounts and sector plates. Repeat the previous steps for the remaining sectors, E1, E2, E3 with their respective plates and mounts. (Uses the same lifting fixtures). (PP-2.5.3.4-06) **Decommissioning Procedure:** Unbolt, remove 1 sector at a time using crane, disassemble/cut up into disposable chunks and discard in dumpster.	4 Days, 8 CAD Tech Days	**ne-20002-004** (Supply 92%Ar + 8% CH4 to TEC wire Chamber for test)(9/24/2002-9/24/2002) **06_011/DRL-2006-005** (TEC Repairs)(6/30/2006-10/15/2006)	✓ (TEC Cable Routing) (PP-2.5.3.4-06, TEC/PC3 Installation Procedure) (TEC Assembly dwg #002-0206-1019)	30-Ton Lift Beam (1) S/N 92724, Model # 20S-30-14 Swivel Eyes: 3/8-16 Swivel Eyes (4), 1000 lbs capacity 3/4-10 Swivel Eyes (2), 5000 lb capacity Slings: 3-Ton Capacity (2) TEC 2-Ton H lifting fixture (1) S/N 02208, Model # 2S-2-80, Test SE3002089 Wire Rope Turnbuckle Assembly Drawing 002-0206-1018 (2) Chain Fall 3-Ton Capacity (2) 4"x4"x7' wood blocks (2)
Time of Flight	**Installation Procedure:** Before installing lifting fixture on to the ToF, verify all ToF's top bearings have been shimmed properly to ensure proper engagement of the bearings into the lift fixture groove. With fixture laying horizontally on cribbing with I-beam and C-channels on topside, attach 1-Ton-6' slings choker style around the outermost channels at the four corners. Attach four slings to crane hook and move the fixture to a position abutting the end of the ToF panel assembly with fixture grooves aligned horizontally to the ToF's mounting bearings. Carefully move the fixture horizontally engaging the ToF's top and bottom mounting bearings into the bearing grooves in the fixture allowing the slings to support the fixture weight. Before lifting, install the top rail to ToF safety jackscrews then the safety retaining screws. Install four C-clamps on to the fixture at each end of the TOF (top and bottom) to prevent movement of the ToF with in the fixture. Lay and fasten cables with cable ties to back of lift fixture C-channels evenly distributed for equal weight distribution. **CAUTION: Do not lift assembly without C-clamps, jackscrews, and safety screws installed.** Lift assembly to transfer it to storage table for delivery to building 1008. Once on the table, remove C-clamps, jackscrews, and safety screws and remove lift fixture. ToF assembly shall arrive via flat bed truck, strapped to a rolling assembly table, remove ToF assembly and rolling table together, remove strapping from ToF and assembly table. Install lift frame as described above, verify all clamps are secure, lift assembly with 10' long 2-Ton sling attached to fixture lift rings. Bring cables around to the front of the ToF panel and secure. Move assembly adjacent to the NORTH side of east carriage and appropriate sector level. Readjust position of hoist rings on fixture to fine-tune the hanging position to match sector level, install C-clamp to far end of permanent installation rack on carriage. From lift fixture, remove the two C-clamps closet to the permanent tracks and remove the four jackscrews and four safety screws. Roll ToF panel into appropriate position, install another C-clamp to permanent tracks to temporarily secure the TOF assembly until both panels are installed onto tracks. Remove fixture from ToF Permanent rails. (PP-2.5.3.4-05) **Decommissioning Procedure:** Cut all service lines, disconnect and remove all TOF-E services, disassemble, remove and move to safe storage area.	5 Days, 10 CAD Tech Days	**2005-008/SS-2005-150** (Install TOF Mockup)(9/23/2005-11/30/2005) **2005-010/SS-2005-197** (Install TOF Mockup extended)(12/12/2005-4/30/2006)	✓ (Time of Flight Installation Procedure, Figures 1-4) (TOF Hoist Frame Assembly dwg 3002-0208-500) (TOF Carriage Track Assembly dwg #002-0208-501)	(4) Slings (Hoist to Hoist lift), 4 ft long min (horizontal lift) (1) Sling rated 2-Tons min, any length suitable (installation lift) (1) Shackle rated 2-Tons min Building Crane rated 2-Tons min (2) Tag lines of sufficient strength (10) C-clamps (12) 3/8-16x1" long hex socket head cap screws (1) 6/16 hex wrench (4) 3/8-16 x 1 1/4 long st. stl. hex head machine screws (4) 3/16-18 x 1 1/4 long st. stl. hex head cap screws ToF hoise, BNL drawing no. 002-0208-500 Splice Plate and shims, BNL drawing no. 002-0208-530
Electromagnetic Calorimet	**Installation Procedure:** **Sector "0" :** Attach lifting trunnions to EmCal frame, attach yellow 30-Ton EmCal lift beam to sector using 40-Ton crane hook and 15-Ton slings. When load has been taken onto the crane, unbolt the two feet from frame so they can be removed with forklift. Move sector to carriage and place on its upper mounting brackets. Verify EmCal trunnions are sitting properly within the mounting brackets. Disconnect beam and slings. Install two swivel eyes, min 3-Ton capacity, in holes drilled in vertical towers of carriage. Remove upper lifting trunnions from the frame, install two swivel eyes, min 3-Ton capacity, in lower lifting mounting holes. Install shoulder eyes (4), min 3-Ton capacity per side, in holes oin bottom of EmCal frame. Attach two chainnolists, min 3-Ton capacity each, between two pairs of swivel eyes, install 3-Ton capacity sling in series with chainnolist. Rotate sector into final position, attach two slings between shoulder eyes on bottom of sector and the two carriage lifting weldments on front face of carriage. Bolt two keeper bars to back of lower brackets. Remove the two slings, chainnolists, swivel & shoulder eyes. **Sector "1" :** Attach lifting trunnions to EmCal frame, attach yellow 30-Ton EmCal lift beam to sector using 40-Ton crane hook and 15-Ton slings. When load has been taken onto the crane, unbolt the two feet from frame so they can be removed with forklift. Move sector to carriage and place on its upper mounting brackets. Verify EmCal trunnions are sitting properly within the mounting brackets. Disconnect beam and slings. Install two swivel eyes, min 2-Ton capacity, in holes drilled in vertical towers of carriage. Remove upper lifting trunnions from the frame, install two swivel eyes, min 2-Ton capacity, in lower lifting mounting holes. Attach two chainnolists, min 2-Ton capacity each, between two pairs of swivel eyes, install 2-Ton capacity sling in series with chainnolist. Wrap a sling, min 2-Ton capacity, horizontally around body of EmCal frame. Rotate sector into final position, tighten the sling, bolt two keeper bars to back of lower brackets, remove sling, slowly release load from two come-alongs and disconnect them, remove all swivel eyes. **Sectors "2" & "3" :** Transfer sector from normal stands to rocker-feet, attach lifting trunnions on yellow 30-Ton EmCal lift beam to triangular attachment plates using 40-Ton crane hook. Attach triangular attachment plates to EmCal frame. Slowly lift EmCal sector, rolling gently forward on to rocker-feet. When load has been taken onto the crane, unbolt the two feet from frame so they can be removed using a forklift. Move sector to carriage and place in its upper mounting. Lower crane until sector engages its lower mounting bracket, ensure crane follows the hook. Disconnect triangular attachment plates from EmCal frame and remove along with lifting beam. Bolt two keeper bars to back of support brackets. (PP-2.5.2.9-01) **Decommissioning Procedure:** Cut all service lines, Remove EM Cal Racks and toss in dumpster, Disconnect and remove all EM Cal modules and move to safe storage area.		**ne-1993-004** (Put EMCAL detector on truck)(8/3/1993-8/4/1993) **06_012/DRL-2006-006** (EMCal Repairs)(6/30/2006-10/15/2006)	✓ (EmCal Installation Procedure PP-2.5.2.9.01, No Drawing Numbers)	30-Ton EMCal Lift Beam 2'6" long, 15-Ton Slings (2) M-24 Shoulder Eyes, 3-Ton Capactiy (4) Swivel-Eyes: 3-Ton Capacity (4) 2-Ton Capacity (4) Chainnolists: 3-Ton Capacity (2) 2-Ton Capacity (2) Slings: 3-Ton Capacity (2) 3-Ton Capacity (2) 2-Ton Capacity (3) Triangular attachment plates (2)
PbSC East & PbGl	**Installation Procedure:** Modules installed with the EmCal. **Decommissioning Procedure:** Disconnect from EM Cal and move to safe storage area.	10 Days, 10 PHENIX Tech Days, 10 CAD Tech Days	N/A	✓ (PbSC East Cable Routing)	Manlift
Electronics Racks	**Installation Procedure:** Electronics Racks installed above and behind the East Carriage with electronics respective to each detector. **Decommissioning Procedure:** Strip all unwanted electronics from racks, cut all wires, remove all inner components and dispose except for rack components and main power supplies. Keep racks.	2 Days to strip all racks, 1/4 Day 1/2 PHENIX Tech Day to remove from EC to AH floor, 1 Day 4 Rigger Days to move all EC racks to safe storage, 24 racks to be salvaged, Total = 30 Days, 36 PHENIX Tech Days, 4 Rigger Days.	**PAG-2012-001** (Install Power Meter modules on the Rack Room East & West HVAC condensers)(8/22/2012-n/a) **DRL-2011-002** (FEM Troubleshooting)(1/18/2011-2/1/2011) **DRL-2014-002** (DC East FEM Repairs during run 14)(3/11/2014-n/a)	✓ (East Carriage North Side, East Carriage South Side Cable Routing)	Railing to ensure the safety of the on-carriage work away from the building wall Man-Lift to hook up electronic racks to crane Crane Equipment necessary to strip electronics
Deconstruct Carriage and dispose/recycle.	**Decommissioning Procedure:** Unbolt and remove rack platforms to floor level for cut up. Cut up rack platforms into disposable segments and stack outside AH for vendor removal. Rotate carriage frame 90 degree to disassemble. Disassemble services and discard in dumpster, Disassemble/cut carriage frame into disposable segments and stack outside of AH for vendor removal.	20 days, 40 CAD tech days		✓ (Tower Lifting Details dwg # R0002-0501-193) (Carriage Arm Lifting Details dwg #R0002-0501-102/104) (Base Frame Lifting Details dwg #R0002-0501-100) (Top Support Beam Lifting Details dwg #R0002-0501-174) (Cross Brace Lifting Details dwg #R0002-0501-119)	
Total EC		4 Rigger Days, 92 CAD Tech Days			

PHENIX Decommissioning Process

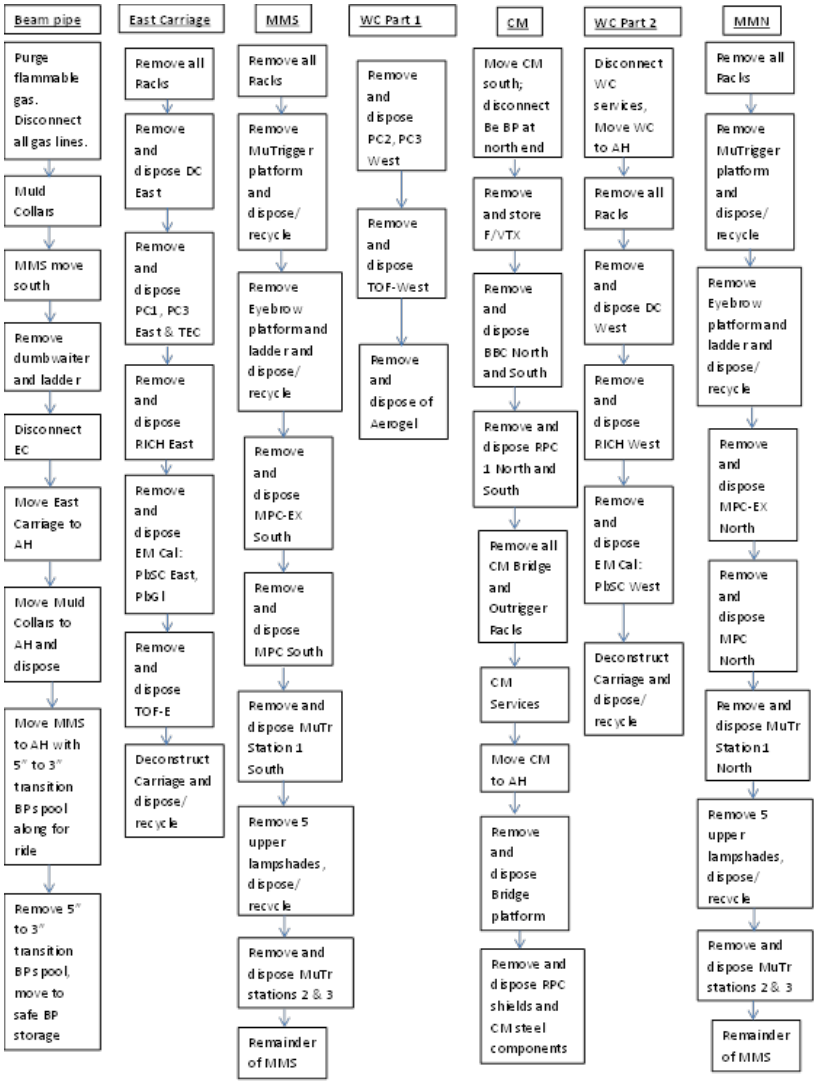

- Organized flow of decommissioning procedures for each section of the PHENIX.
- Each section has specific order of detector disassembly.
- Helps organize the decommissioning procedures for easier viewing purposes.

Photographs of Lifting Fixtures

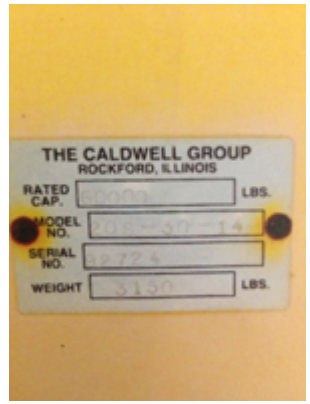

- With the list of lifting fixtures in the spreadsheet, photographs of some of the lifting fixtures in the “boneyard” were collected to help identify them.
- These lifting fixtures will be used in the decommissioning of the PHENIX detector.
- For example, the fixture with the model number 20S-30-14 will be used for the Time Expansion Chamber in the Carriages.

sPHENIX Tasks & Schedule

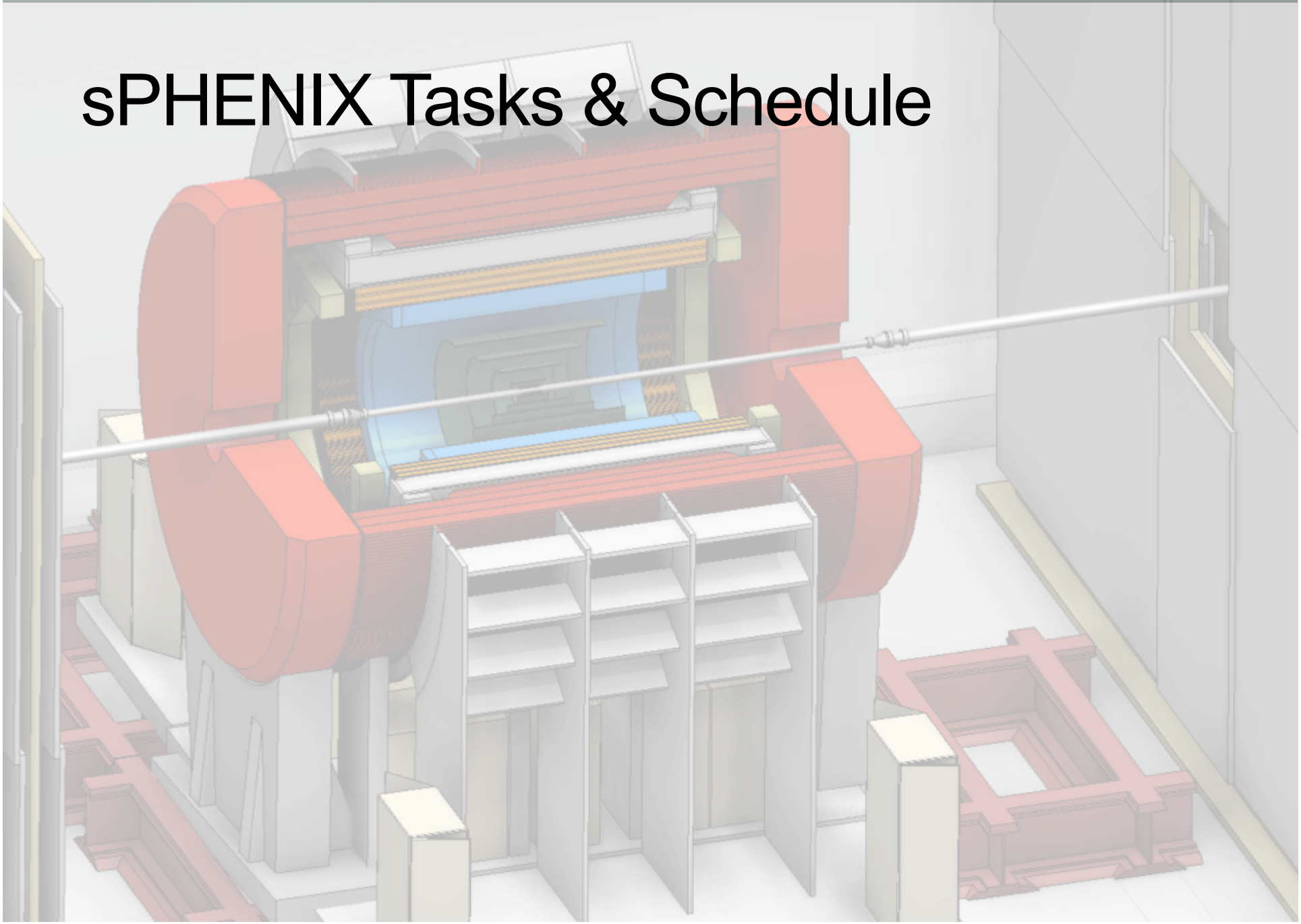

Regular sPHENIX Meetings

- Bi-weekly sPHENIX engineering meeting Thurs 11:00 am
- Bi-weekly sPHENIX subsystem meeting Thurs 11:00 am
- Bi-weekly magnet meeting with SMD and CAD Wed 11:00 am
- Weekly PMG meeting Tues 4:00 pm

Need to add:

- Weekly sPHENIX Project team meeting
- Bi-weekly meeting with C-AD (Yousef and Phil)

Work for the Next Two Months

- **Finish WBS including dictionary**
  - **Import to MS-Project**
  - **Add task durations and milestones to create v1 of the schedule**
  - **Define resources**
- **Begin design packages for sPHENIX reference design**
  1) **Global system**
  2) **HCal Outer**
  3) **HCal Inner**
  4) **EMCal**
  5) **Calorimeter Electronics**
  6) **DAQ/Trigger**
  7) **Tracker**
  8) **Magnet**
  9) **Decommissioing**
- **Begin Cost estimate spreadsheets**
- **Start on Basis of Estimate documents**
- **Finalize R&D plan for the next 2 years**
- **Identify issues that require a down-select process and define the process**
- **Start on other support documentation including Cost Book**

Documentation We Need to Create for CD-1 Review

- Conceptual Design Report
- Cost, Schedule and Labor estimates
- WBS including Dictionary and Cost Book
- Basis of Estimate documents
- Contingency Estimate – Bottoms up and risked based
- Project Execution Plan
- Safety and Hazard Analysis
- Quality Assurance Plan
- Acquisition Strategy
- Risk Analysis and Mitigation document
- National Environmental Policy Act document
- Integrated Project Management Team document

Back Up

Top Level WBS

WBS Number	Description	Dictionary (Y/N)	# Schedule Activities	# Cost Details	Contingency %	# Risk Assessments	# Supporting Docs	Responsible
		N	0	0	0	0	0	
1.01	**Management**	**Y**	**0**	**0**	**0**	**0**	**0**	**EOB/JH**
1.01.01	Project Management and Coordination	Y	0	0	0	0	0	EOB/JH
1.01.02	Project Management/Coordination Support	Y	0	0	0	0	0	EOB/JH
1.02	**Decommissioning**	**Y**	**0**	**0**	**0**	**0**	**0**	**Phillips**
1.02.01	Preparation and Oversight	N	1	2	0	0	0	Phillips
1.02.02	Disassembly and Disposition	N	0	0	0	0	0	Phillips
1.03	**Magnet**	**Y**	**0**	**0**	**0**	**0**	**0**	**Anerella**
1.03.01	Magnet Ancilllary Systems Design	Y	0	0	0	0	0	Anerella
1.03.02	Magnet Ancillary Systems Production	Y	0	0	0	0	0	Anerella
1.03.03	Magnet Installation/Testing	N	0	0	0	0	0	Anerella
1.04	**Tracking**	**N**	**0**	**0**	**0**	**0**	**0**	**Akiba**
1.04.01	VTX Reconfiguration	N	0	0	0	0	0	Akiba
1.04.01.01	Inner Tracking Design	N	1	1	0	0	0	Akiba
1.04.01.02	Inner Tracking Production/Assembly	N	0	0	0	0	0	Akiba
1.04.02	Outer Tracking Layers	N	0	0	0	0	0	Akiba
1.04.02.01	Outer Tracking Layer Design	N	0	0	0	0	0	Akiba
1.04.02.02	Outer Tracking Layer Prototype	N	0	0	0	0	0	Akiba
1.04.02.03	Outer Tracking Layer Production	N	0	0	0	0	0	Akiba
1.05	**EMCAL**	**N**	**0**	**0**	**0**	**0**	**0**	**Woody**
1.05.01	EMCal Design	N	0	0	0	0	0	Woody
1.05.02	EMCal Prototype	N	0	0	0	0	0	Woody
1.05.03	EMCal Production	N	0	0	0	0	0	Woody
1.06	**HCAL**	**Y**	**0**	**0**	**0**	**0**	**0**	**Kistenev**
1.06.01	Inner HCAL	Y	0	0	0	0	0	Kistenev
1.06.01.01	Inner HCal Design	Y	0	0	0	0	0	Kistenev
1.06.01.02	Inner HCal Prototype	N	0	0	0	0	0	Kistenev
1.06.01.03	Inner HCal Production	N	0	0	0	0	0	Kistenev
1.06.02	Outer HCAL	Y	0	0	0	0	0	Kistenev
1.06.02.01	Outer HCal Design	N	0	0	0	0	0	Kistenev
1.06.02.02	Outer HCal Prototype	N	0	0	0	0	0	Kistenev
1.06.02.03	Outer HCal Production	N	0	0	0	0	0	Kistenev
1.07	**Calorimeter Electronics**	**N**	**0**	**0**	**0**	**0**	**0**	**Mannel**
1.07.01	CalE Sensors	Y	0	0	0	0	0	Stoll
1.07.01.01	CalE Sensor Specification	Y	0	0	0	1	0	Stoll
1.07.01.02	CalE Sensor Procurement	Y	0	0	0	0	0	Stoll
1.07.02	CalE On-Detector Electronics	Y	0	0	0	0	0	Boose
1.07.02.01	CalE Fee Design	Y	0	0	0	1	0	Boose
1.07.02.02	CalE Fee Prototype	Y	0	0	0	0	0	Boose
1.07.02.03	CalE Fee Production	Y	0	0	0	0	0	Boose

Top Level WBS

1.07.03	CalE Digitizer System	N	0	0	0	0	0	Chi
1.07.03.01	CalE FEM Design	N	0	0	0	0	0	Chi
1.07.03.02	CalE FEM Prototype	N	0	0	0	0	0	Chi
1.07.03.03	CalE FEM Production	N	0	0	0	0	0	Chi
1.08	**DAQ and Trigger**	**N**	**0**	**0**	**0**	**0**	**0**	**Chi**
1.08.01	DAQ	N	0	0	0	0	0	Chi
1.08.01.01	DAQ Design	N	0	0	0	0	0	Chi
1.08.01.02	DAQ Prototype	N	0	0	0	0	0	Chi
1.08.01.03	DAQ Production	N	0	0	0	0	0	Chi
1.08.02	Trigger	N	0	0	0	0	0	Lajoie
1.08.02.01	Trigger Design	N	0	0	0	0	0	Lajoie
1.08.02.02	Trigger Prototype	N	0	0	0	0	0	Lajoie
1.08.02.03	Trigger Production	N	0	0	0	0	0	Lajoie
1.09	**Infrastructure**	**Y**	**0**	**0**	**0**	**0**	**0**	**Giannotti**
1.09.01	Infrastructure System Design	Y	0	0	0	0	0	Giannotti
1.09.02	Infrastructure System Production	N	0	0	0	0	0	Giannotti
1.10	**Installation and Integration**	**N**	**0**	**0**	**0**	**0**	**0**	**Lynch**
1.10.01	Integration Management and Technical Coord.	Y	0	0	0	0	0	Lynch
1.10.02	Tooling/Fixture/Procedures Design & Production	N	0	0	0	0	0	Lynch
1.10.03	sPHENIX Installation	N	0	0	0	0	0	Phillips

HCal WBS to Level 6

A	B	C	D	E	F	G	H	I
WBS Number	Description	Dictionary (Y/N)	# Schedule Activities	# Cost Details	Contingency %	# Risk Assessments	# Supporting Docs	Responsible
1.06	HCAL	Y	0	0	0	0	0	Kistenev
1.06.01	Inner HCAL	Y	0	0	0	0	0	Kistenev
1.06.01.01	Inner HCal Design	Y	0	0	0	0	0	Kistenev
1.06.01.02	Inner HCal Prototype	N	0	0	0	0	0	Kistenev
1.06.01.02.01	Inner HCal Prototype v1	N	0	0	0	0	0	Kistenev
1.06.01.02.02	Inner HCal Prototype v2	N	0	0	0	0	0	Kistenev
1.06.01.02.03	Inner HCal Preproduction prototype	N	0	0	0	0	0	Kistenev
1.06.01.03	Inner HCal Production	N	0	0	0	0	0	Kistenev
1.06.01.03.01	Inner HCal Module Production	N	0	0	0	0	0	Kistenev
1.06.01.03.01.01	Inner HCal Steel absorber production	N	0	0	0	0	0	Kistenev
1.06.01.03.01.02	Inner HCal Scintillator tile and fiber production	N	0	0	0	0	0	Kistenev
1.06.01.03.01.03	Inner HCal Light Collector Production	N	0	0	0	0	0	Kistenev
1.06.01.03.01.04	Inner HCal Module Mechanics	N	0	0	0	0	0	Kistenev
1.06.01.03.01.05	Inner HCal Module Service Interface	N	0	0	0	0	0	Kistenev
1.06.01.03.02	Inner HCal Module Assembly	N	0	0	0	0	0	Kistenev
1.06.01.03.03	Inner HCal Module Testing/Calibration/Integration	N	0	0	0	0	0	Kistenev
1.06.02	Outer HCAL	Y	0	0	0	0	0	Kistenev
1.06.02.01	Outer HCal Design	N	0	0	0	0	0	Kistenev
1.06.02.02	Outer HCal Prototype	N	0	0	0	0	0	Kistenev
1.06.01.02.01	Outer HCal Prototype v1	N	0	0	0	0	0	Kistenev
1.06.01.02.02	Outer HCal Prototype v2	N	0	0	0	0	0	Kistenev
1.06.01.02.03	Outer HCal Preproduction prototype	N	0	0	0	0	0	Kistenev
1.06.02.03	Outer HCal Production	N	0	0	0	0	0	Kistenev
1.06.02.03.01	Outer HCal Module Production	N	0	0	0	0	0	Kistenev
1.06.02.03.01.01	Outer HCal Steel absorber production	N	0	0	0	0	0	Kistenev
1.06.02.03.01.02	Outer HCal Scintillator tile and fiber production	N	0	0	0	0	0	Kistenev
1.06.02.03.01.03	Outer HCal Light Collector Production	N	0	0	0	0	0	Kistenev
1.06.02.03.01.04	Outer HCal Module Mechanics	N	0	0	0	0	0	Kistenev
1.06.02.03.01.05	Outer HCal Module Service Interface	N	0	0	0	0	0	Kistenev
1.06.02.03.02	Outer HCal Module Assembly	N	0	0	0	0	0	Kistenev
1.06.02.03.03	Outer HCal Module Testing/Calibration/Integration	N	0	0	0	0	0	Kistenev
1.07	Calorimeter Electronics	N	0	0	0	0	0	Mannel