PHENIX
REACTION PLANE DETECTOR (RXNP)
INSTALLATION PROCEDURE

procedure name

PHENIX Procedure No. 2.5.5.4-27

Revision: A **Date: 3/22/2007**

Hand Processed Changes

HPC No.	Date	Page Nos.	Initials

Approvals

Don Lynch
PHENIX S E & I Date

Cognizant Scientist/Engineer /Activity Manager Date

PHENIX QA/Safety Date

RHIC ES&H Date

REVISION CONTROL SHEET

LETTER	DESCRIPTION	DATE	WRITTEN BY	APPROVED BY	CURRENT OVERSIGHT
A	First Issue (Note: issued as procedure for control purposes. Originally prepared as attachment to work permit Installation.	3/22/2007	D. Lynch	(See appropriate work permit)	D. Lynch
Deactivated	Original installation complete. Re-activate to re-issue or revise installation procedure when necessary	3/22/2007	D. Lynch	D. Lynch, R. Pisani, P. Giannotti	D. Lynch

Work plan Attachment **WP# _____**

RXNP Detector
PHENIX IR, Bldg. 1008

Installation Procedure (To Install in CM region of PHENIX IR)

(Note: the following sequence assumes that the North and South detector installations will be performed sequentially allowing for separate delivery of the North and South detector modules. Should the North and South detectors arrive together, the instructions below may be performed concurrently.)

Please refer to attached figures for reference. All lifting and positioning of detector components is to be accomplished manually by a minimum of 2 PHENIX mechanical technicians working in coordination.

Extreme care shall be taken at all times to avoid any contact by equipment and/or personnel with the beampipe.

I. North Detector section

a. Verify that PHENIX central magnet is locked out of operation. (C. Pearson)
b. Install soft beampipe protection
c. Install 2 baseplates on North nosecone.
d. Test fitup 4quadrants on North baseplate and mark arm mounting hole location for drilling and tapping
e. Drill and tap 4 mounting holes on North poleface (Note: drilling and tapping for south detector may be done at same time.)
Make sure that drilling and tapping are performed with extreme care that so no metal chips are left behind near or under the central magnet
f. Pre-install cable management trays on CM pole, flux return and ibeams as shown. ***(Note: installing cable management will require the use of a manlift. The manlift will only be used on the east side central magnet flux return to install cable trays and route cables. The manlift is not to be used for the installation of the detectors themselves and at no time shall the manlift be used in proximity to or above the beampipe.)***
g. Pre assemble PMT's, arms, trays, fibers, spacers, covers and scintillators as shown into quadrants.
h. Install 4 quadrants as shown on base plates and secure arms to pole face
i. Mount LED box on U-shaped cable tray leg and route fibers to PMT's
j. Route cables from bridge rack location to PMT's as shown.

II. South Detector section

a. Repeat steps c through j for the south detector

See the attached diagrams for further information.

Detectors are now ready for electrical connection to rack electronics and commissioning.

RXNP Quadrant Assembly

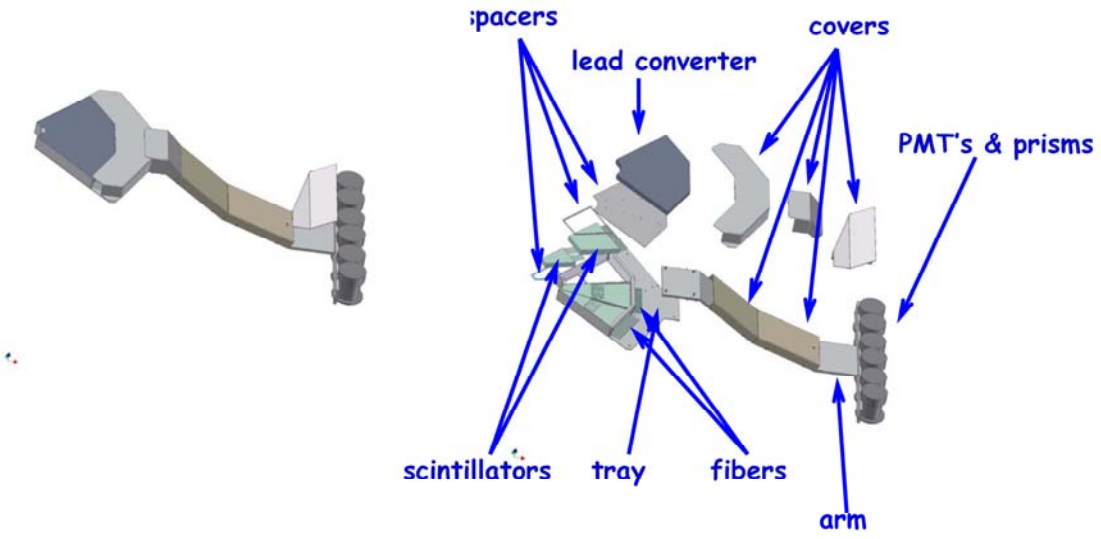

7/25/2006 RXNP Installation

RXNP Installation

1

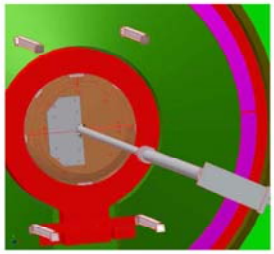

2

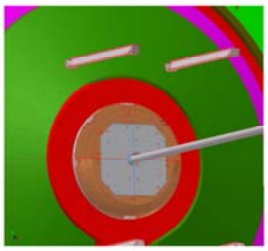

Steps 1 and 2: Baseplates are fastened to brass nosecone

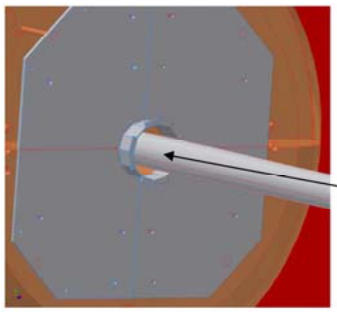

Inner shield of baseplates forms protective barrier around beampipe for quadrant installation. Beampipe to be covered with protective foam cushioning sleeve during installation (not shown).

7/25/2006 RXNP Installation

RXNP Installation

3

4

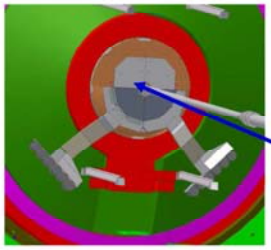

Lower quadrants installed first. Upper surface of lower quadrants forms a shelf to help support upper quadrant installation outboard of beampipe then slid along "shelf" inboard to final location

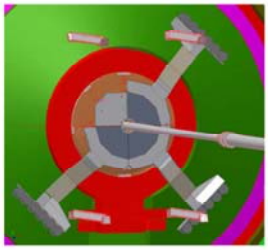

5

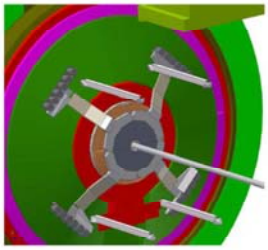

6

7/25/2006

RXNP Installation

LED Fiber Routing

RXNP

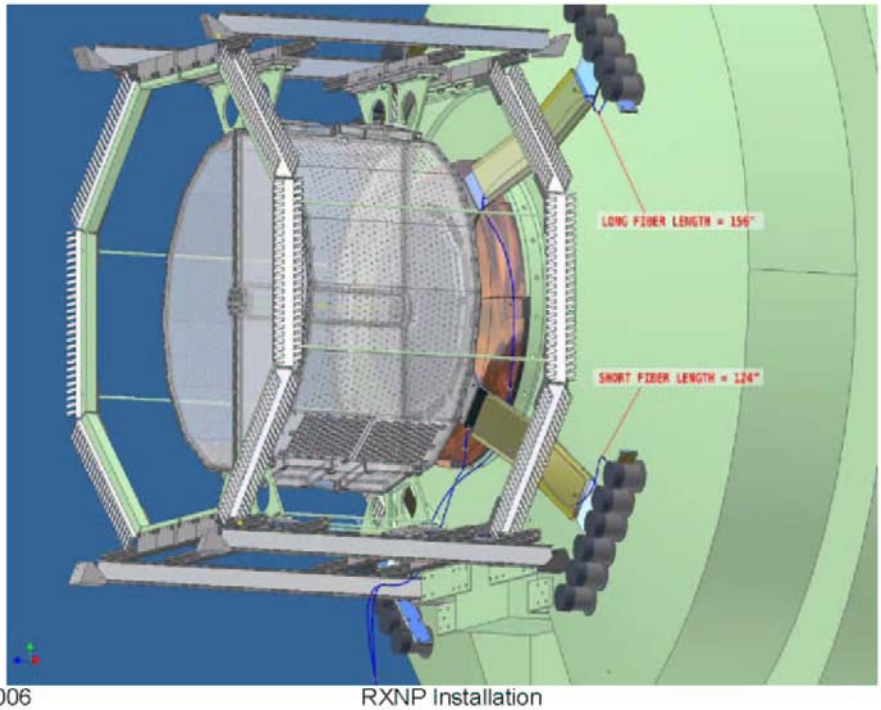

7/25/2006 RXNP Installation

RXNP & HBD Cable Routing 1

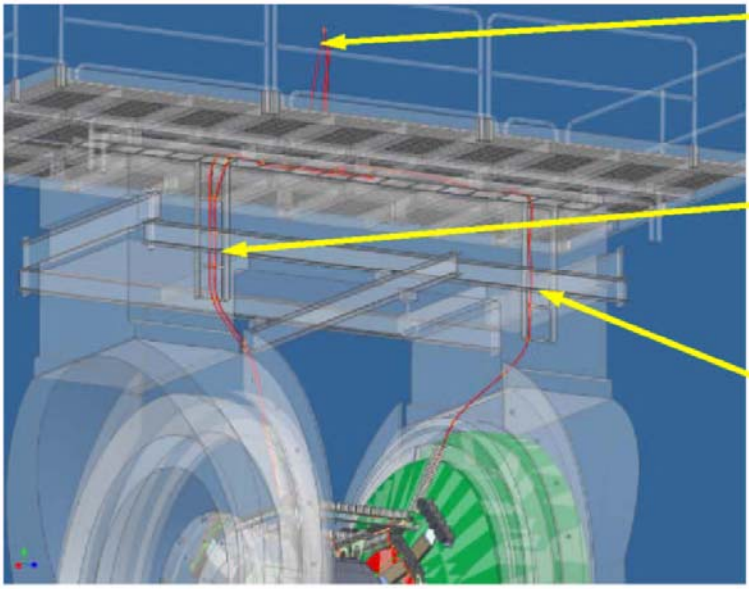

7/25/2006 RXNP Installation

RXNP & HBD Cable Routing 2

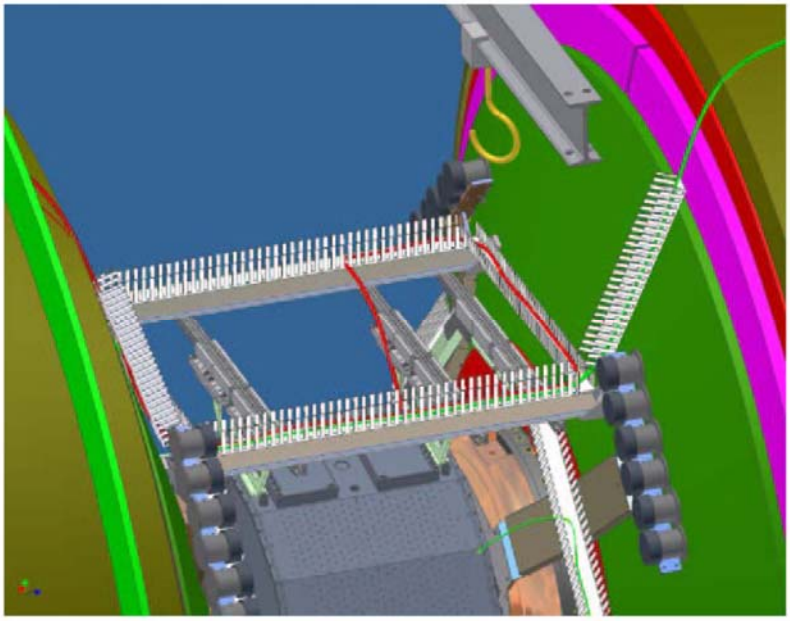

RXNP cables come down from top of CM north pole face to east upper i-beam, ¾ cross over to west upper i-beam and ½ cross to south pole face

HBD HV cables follow opposite route (from top of CM south pole face to west upper i-beam, ¾ cross over to east upper i-beam and ½ cross to north pole face)

7/25/2006 RXNP Installation

RXNP & HBD Cable Routing 3

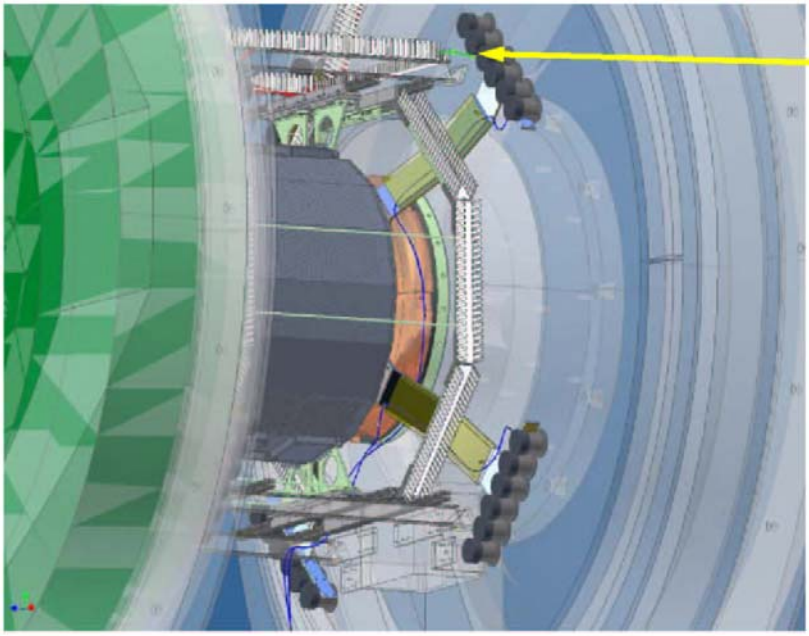

RXNP Cables from i-beam take short route to PMT's

7/25/2006 RXNP Installation