REVISIONS						
REV	ECN NO.	DESCRIPTION	BY	DATE	CKR	APP
A		INITIAL RELEASE	RR			

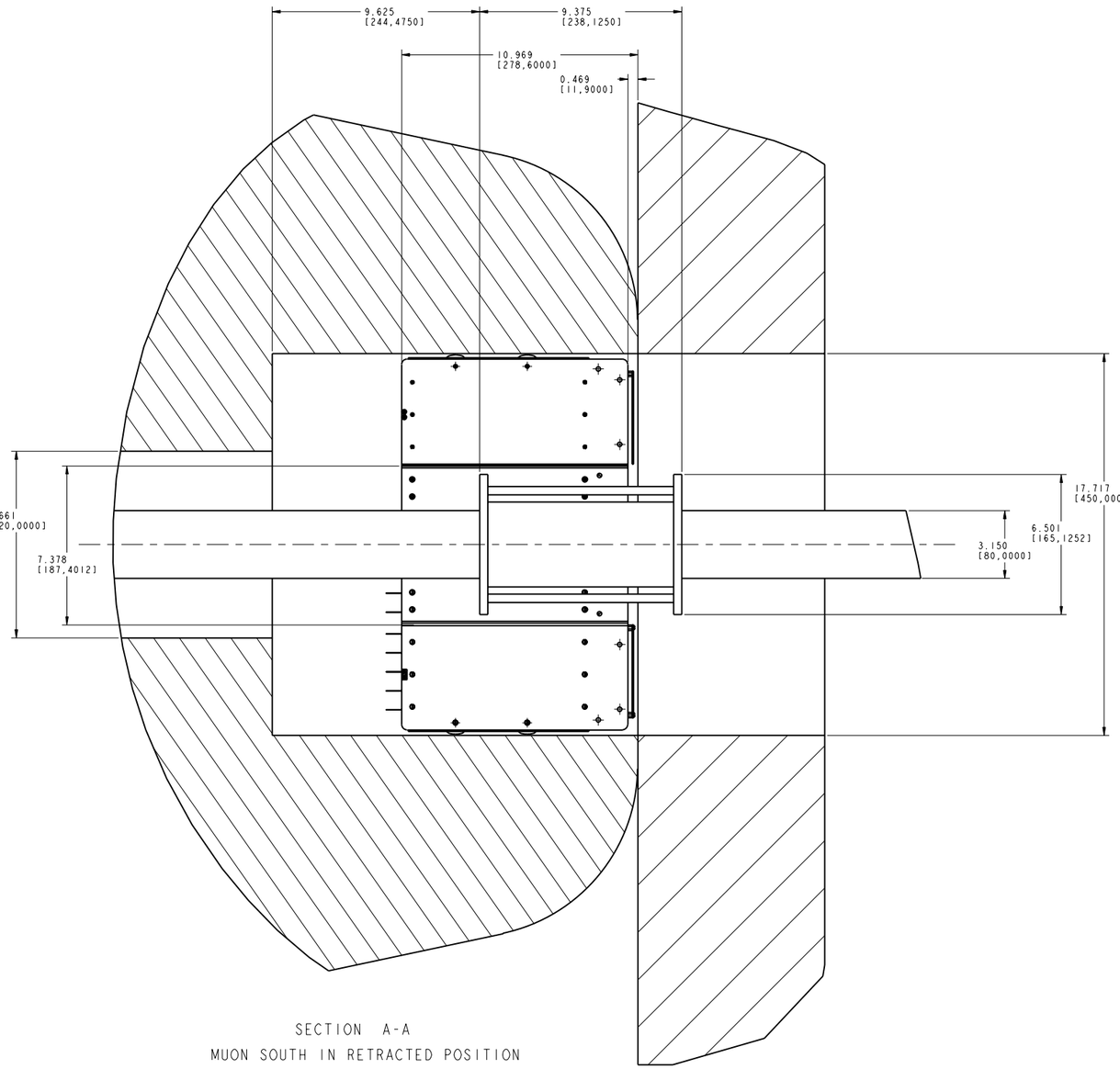

SECTION A-A
MUON SOUTH IN RETRACTED POSITION

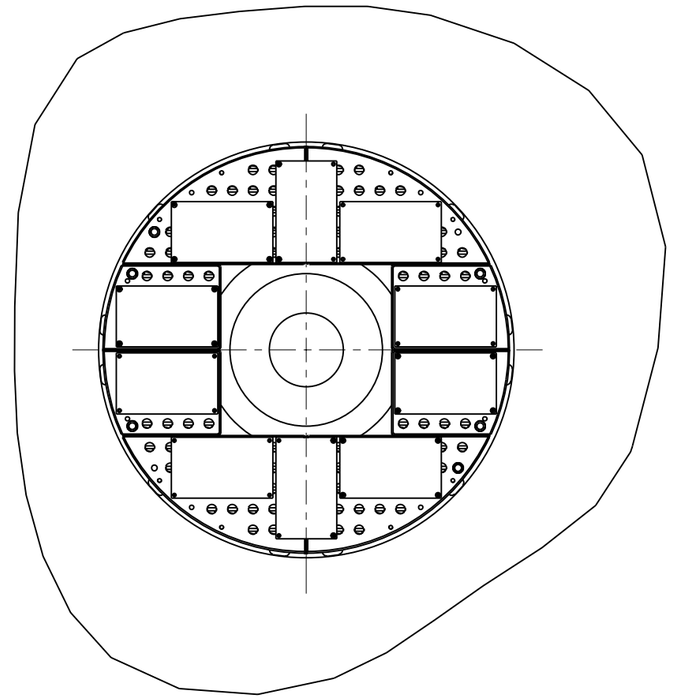

DET	QTY	MODEL NAME / DESCRIPTION	TYPE	DRAWING NUMBER
8	2	TOP-BOTTOM_MODULE_ASSEMBLY2	ASSEMBLY	-
7	2	TOP-BOTTOM_MODULE_ASSEMBLY	ASSEMBLY	105-0219-002
6	1	STATIONI-ENV	PART	-
5	2	STANDOFF-MALE-FEMALE-75	PART	KEYSTONE CAT# 1944
4	1	PISTON	PART	
3	2	LEFT-RIGHT_MODULE_ASSY2	ASSEMBLY	-
2	2	LEFT-RIGHT_MODULE_ASSY	ASSEMBLY	105-0219-003
1	1	BEAMPIPE-ENV	PART	-

THIRD ANGLE PROJECTION

NEXT ASSEMBLY

BROOKHAVEN NATIONAL LABORATORY
Managed by Brookhaven Science Associates for the U.S. Department of Energy
Upton, NY 11973

INTERPRET IN GENERAL ACCORDANCE WITH ASME Y14.5M-1994 UNLESS OTHERWISE SPECIFIED. ALL DIMENSIONS ARE IN MILLIMETERS DECIMAL TOLERANCES
X .X±0.1
X.XX ±0.01
X.XXX ±0.001
ANGLES ± 0.5

CODE DWG NUMBER

DRAWN BY: - 26-Oct-05
CHECKED BY: -
CONSTRUCT SPECIFIED: -
A.A. APPROVED: -
SAFETY ENGINEERING: - -

PROJECT: PHENIX
SYSTEM: MPC
MODEL/DRAWING NAME: MAIN-ASSEMBLY
SIZE: E
DRAWING NUMBER: 105-0219-000
REV.: A
Q.A. CATEGORY: A-3
SCALE: 0.500
WEIGHT: NA
SHEET 1 of 2

DWG NO 105-0219-000
SHEET 1 OF 2 A

Notes: Unless otherwise specified:

NAME:RUGGIERO OBJECT:105-0219-000_1 DATE:03-Nov-05 15:34:25

REVISIONS						
REV	ECN NO.	DESCRIPTION	BY	DATE	CKR	APP
A		INITIAL RELEASE	RR			

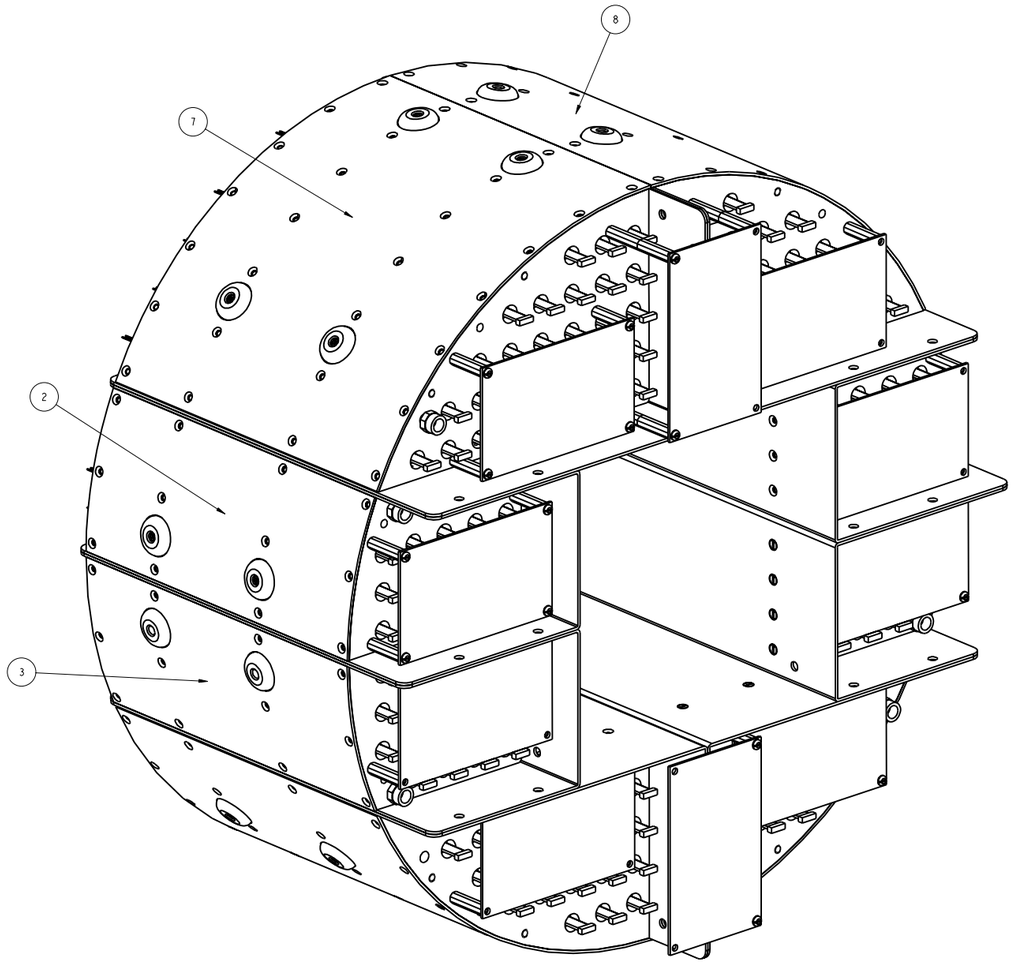

DET	QTY	MODEL NAME / DESCRIPTION	TYPE	DRAWING NUMBER
8	2	TOP-BOTTOM_MODULE_ASSEMBLY2	ASSEMBLY	-
7	2	TOP-BOTTOM_MODULE_ASSEMBLY	ASSEMBLY	105-0219-002
6	1	STATION1-ENV	PART	-
5	2	STANDOFF-MALE-FEMALE-75	PART	KEYSTONE CAT# 1944
4	1	PISTON	PART	
3	2	LEFT-RIGHT_MODULE_ASSY2	ASSEMBLY	-
2	2	LEFT-RIGHT_MODULE_ASSY	ASSEMBLY	105-0219-003
1	1	BEAMPIPE-ENV	PART	-

THIRD ANGLE PROJECTION

NEXT ASSEMBLY

BROOKHAVEN NATIONAL LABORATORY
Managed by Brookhaven Science Associates for the U.S. Department of Energy
Upton, NY 11973

INTERPRET IN GENERAL ACCORDANCE WITH ASME Y14.5M-1994
UNLESS OTHERWISE SPECIFIED:
ALL DIMENSIONS ARE IN MILLIMETERS
DECIMAL TOLERANCES
X .X±0.5
X.XX ±0.01
X.XXX ±0.001
ANGLES ± 0.5

DRAWN BY: -
CHECKED BY: -
COMPLIANT ENGINEERING SCIENTIST: -
Q.A. ENGINEER: -
SAFETY ENGINEERING: -

PROJECT: PHENIX
SYSTEM: MPC
MODEL/DRAWING NAME: MAIN-ASSEMBLY
SIZE: E
DRAWING NUMBER: 105-0219-000
REV.: A
CATEGORY: A-3
SCALE: 0.500
WEIGHT: NA
SHEET 2 OF 2

DWG NO 105-0219-000
SHEET 2 OF 2 A

COD DWG NUMBER

Notes: Unless otherwise specified:

NAME:RUGGIERO OBJECT:105-0219-000_2 DATE:03-Nov-05 15:34:41

NOTES:
1. CUTOUT SIZE TO BE
   DETERMINED BY TECHNICIAN.

2. MATERIAL: POLYURETHANE (BLACK)

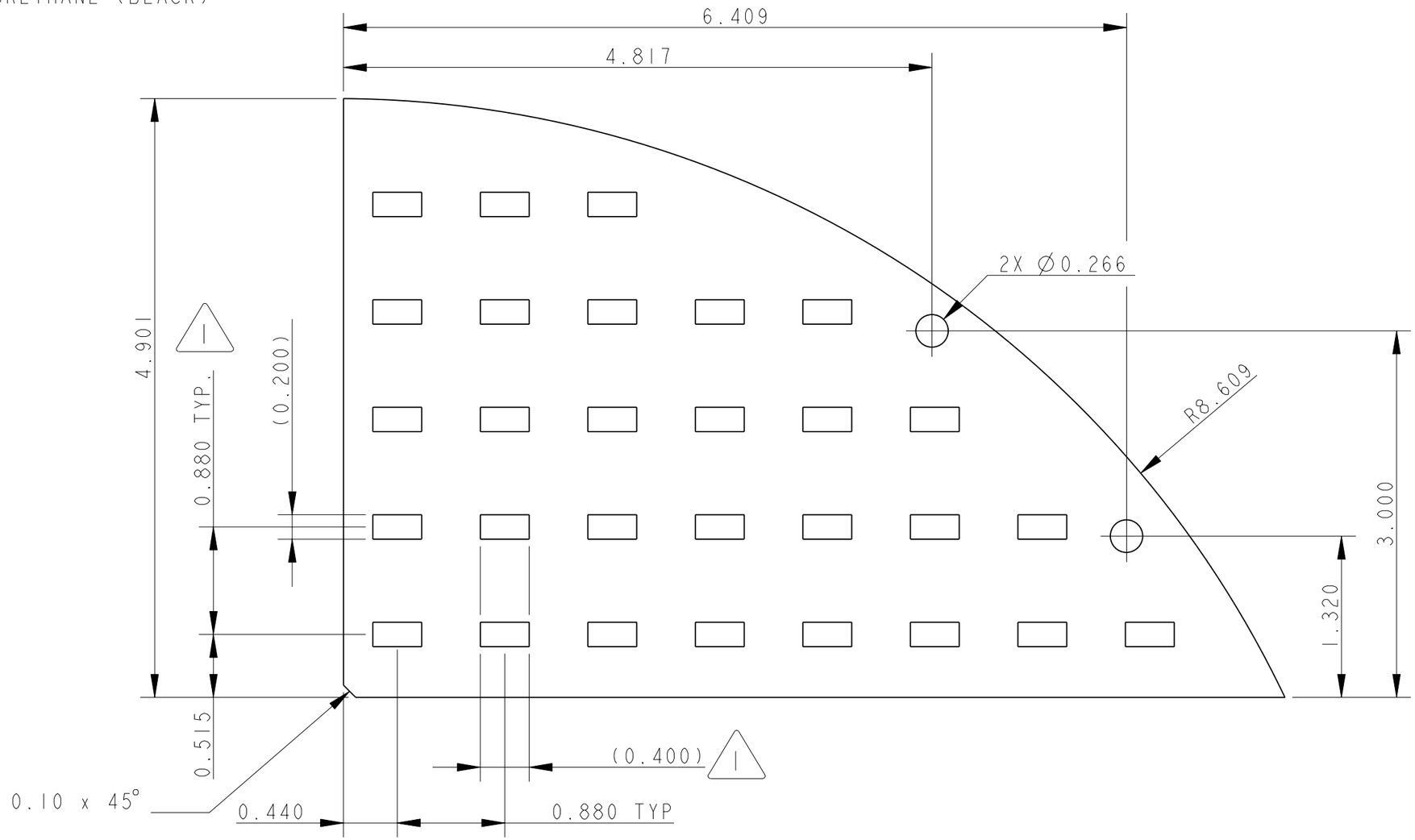

THIRD ANGLE PROJECTION

INTERPRET IN GENERAL ACCORDANCE WITH ASME Y14.5M-1994

UNLESS OTHERWISE SPECIFIED:
ALL DIMENSIONS ARE IN INCHES.
DECIMAL TOLERANCES
X.X ±0.1
X.XX ±0.02
X.XXX ±0.005
ANGLES ± 0.5

125 FINISH

BREAK EDGES:
MAX. .015 MIN. .005

CDD DWG NUMBER

NEXT ASSEMBLY

DRAWN BY:	-	21-Oct-05
CHECKED BY:	-	
COGNIZANT ENGINEER/ SCIENTIST:		
Q.A. APPROVAL:	-	
SAFETY ENGINEER:		

BROOKHAVEN NATIONAL LABORATORY
managed by Brookhaven Science Associates
for the U.S. Department of Energy
Upton, NY 11973

PROJECT: PHENIX
SYSTEM: MPC
MODEL/DRAWING NAME: POLY-GASKET

SIZE	DRAWING NUMBER:	REV.
B	105-0219-023	A

Q.A. CATEGORY:	SCALE:	WEIGHT:	SHEET
A-3	1.000	NA	1 OF 1

NAME:RUGGIERO OBJECT:105-0219-023 DATE:03-Nov-05 15:26:40

1. MATERIAL: BLACK DELRIN

REVISIONS						
REV	ECN NO.	DESCRIPTION	BY	DATE	CKR	APP

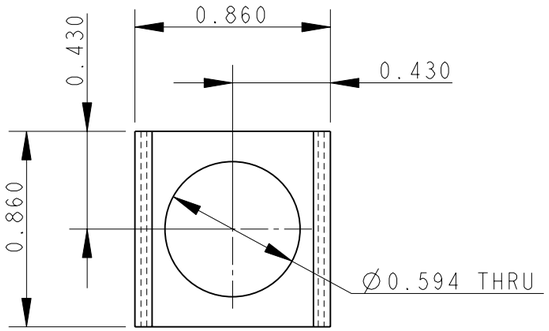

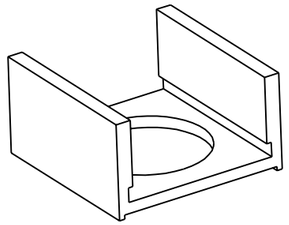

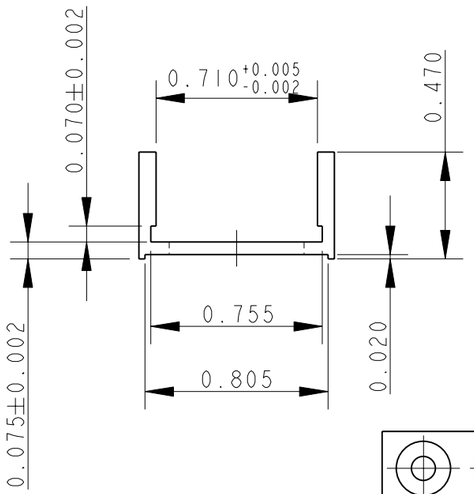

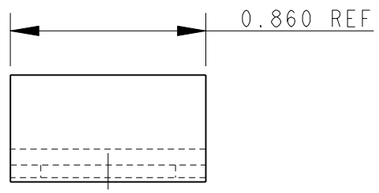

NOT USED

THIRD ANGLE PROJECTION

INTERPRET IN GENERAL ACCORDANCE WITH ASME Y14.5M-1994

UNLESS OTHERWISE SPECIFIED:
ALL DIMENSIONS ARE IN INCHES.
DECIMAL TOLERANCES
X.X ±0.1
X.XX ±0.02
X.XXX ±0.005
ANGLES ± 0.5

FINISH 125✓ | BREAK EDGES: .015 MAX. .005 MIN.

NEXT ASSEMBLY

DRAWN BY	RUGGIERO	06-Oct-05
CHECKED BY	-	
COGNIZANT ENGINEER/ SCIENTIST		
Q.A. APPROVAL	-	

BROOKHAVEN NATIONAL LABORATORY
managed by Brookhaven Science Associates
Upton, NY 11973
for the U.S. Department of Energy

PROJECT: PHENIX
SYSTEM: MPC
MODEL/DRAWING NAME: APD-HOLDER

SIZE: | DRAWING NUMBER: 105-0219-022 | REV. A

Q.A. CATEGORY: A-3 | SCALE: 1.500 | WEIGHT: NA | SHEET: 1/1

NAME:RUGGIERO OBJECT:105-0219-022 DATE:03-Nov-05 15:25:38

NOTES:
1. CUTOUT SIZE TO BE DETERMINED BY TECHNICIAN.
2. MATERIAL: POLYURETHANE (BLACK)

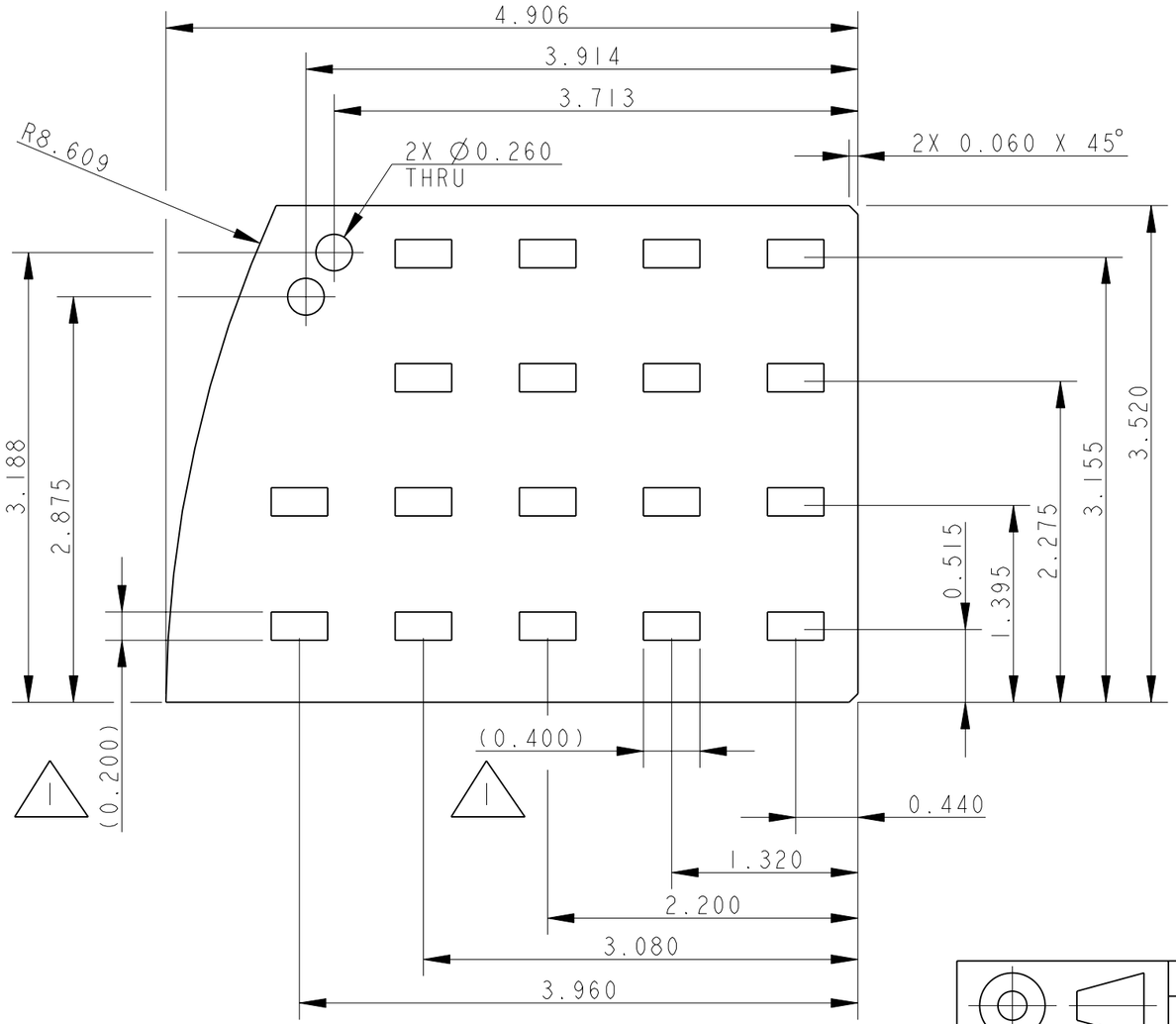

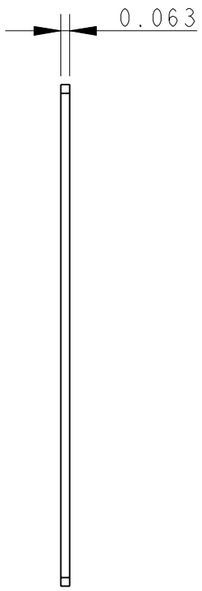

THIRD ANGLE PROJECTION

INTERPRET IN GENERAL ACCORDANCE WITH ASME Y14.5M-1994

UNLESS OTHERWISE SPECIFIED:
ALL DIMENSIONS ARE IN INCHES.
DECIMAL TOLERANCES
X.X ±0.1
X.XX ±0.02
X.XXX ±0.005
ANGLES ± 0.5

125 FINISH

BREAK EDGES:
MAX. .015 MIN. .005

CDD DWG NUMBER

NEXT ASSEMBLY

DRAWN BY:	-	02-Nov-05
CHECKED BY:	-	
COGNIZANT ENGINEER/ SCIENTIST:		
Q.A. APPROVAL:	-	
SAFETY ENGINEER:		

BROOKHAVEN NATIONAL LABORATORY
managed by Brookhaven Science Associates
for the U.S. Department of Energy
Upton, NY 11973

PROJECT: PHENIX
SYSTEM: MPC
MODEL/DRAWING NAME: POLY-GASKET-LEFT-RIGHT

SIZE B | DRAWING NUMBER: 105-0219-021 | REV. A

Q.A. CATEGORY: A-3 | SCALE: 1.000 | WEIGHT: NA | SHEET 1 OF 1

NAME:RUGGIERO OBJECT:105-0219-021 DATE:03-Nov-05 15:25:05

1. MATERIAL: ALUMINUM 6061-T6.

REVISIONS							
REV	ZONE	ECN NO.	DESCRIPTION	BY	DATE	CKR	APP

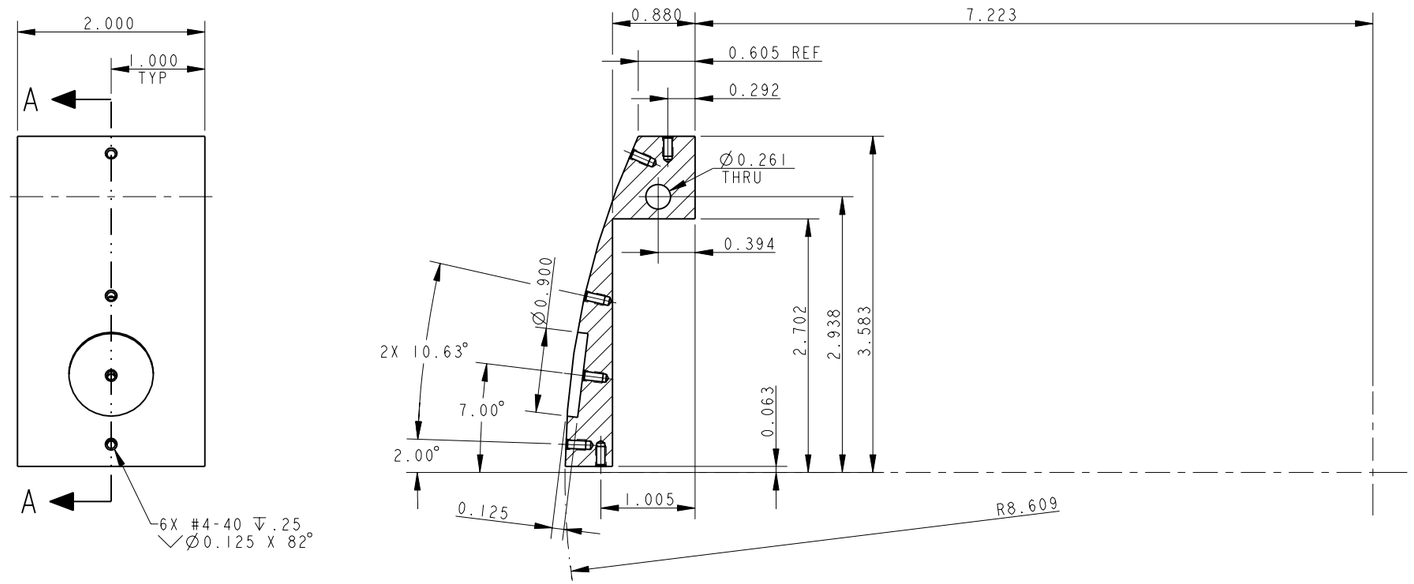

SECTION A-A

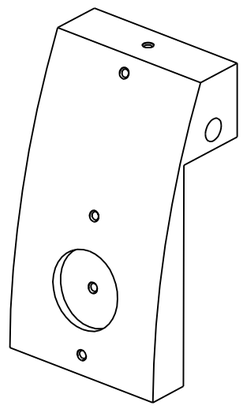

OUTSTANDING ECN NUMBERS	INTERPRET IN GENERAL ACCORDANCE WITH ASME Y14.5M-1994	THIRD ANGLE PROJECTION			BROOKHAVEN NATIONAL LABORATORY
	UNLESS OTHERWISE SPECIFIED ALL DIMENSIONS ARE IN INCHES. DECIMAL TOLERANCES X.X ±0.1, X.XX ±0.02, X.XXX ±0.005, ANGLES ± 0.5	DRAWN BY	RUGGIERO	01-Nov-05	TITLE: PHENIX MPC RIB_LEFT-RIGHT_MODULE
		DESIGN APPROVAL	-	-	
		CHECKED BY	-	-	
		ENGINEER APPROVAL	-	-	
	125 FINISH; BREAK SHARP EDGES .015 MAX. .005 MIN.	SUPERVISOR APPROVAL	-	-	C SIZE; DRAWING NUMBER: 105-0219-020; A REV.
		Q.A. APPROVAL	-	-	Q.A. CATAGORY: A-3; SCALE: 1.000; WEIGHT: NA; SHEET 1 OF 1

NAME:RUGGIERO OBJECT:105-0219-020 DATE:03-Nov-05 15:24:33

REVISIONS							
REV	ZONE	ECN NO.	DESCRIPTION	BY	DATE	CKR	APP

1. MATERIAL: ALUMINUM 6061-T6.

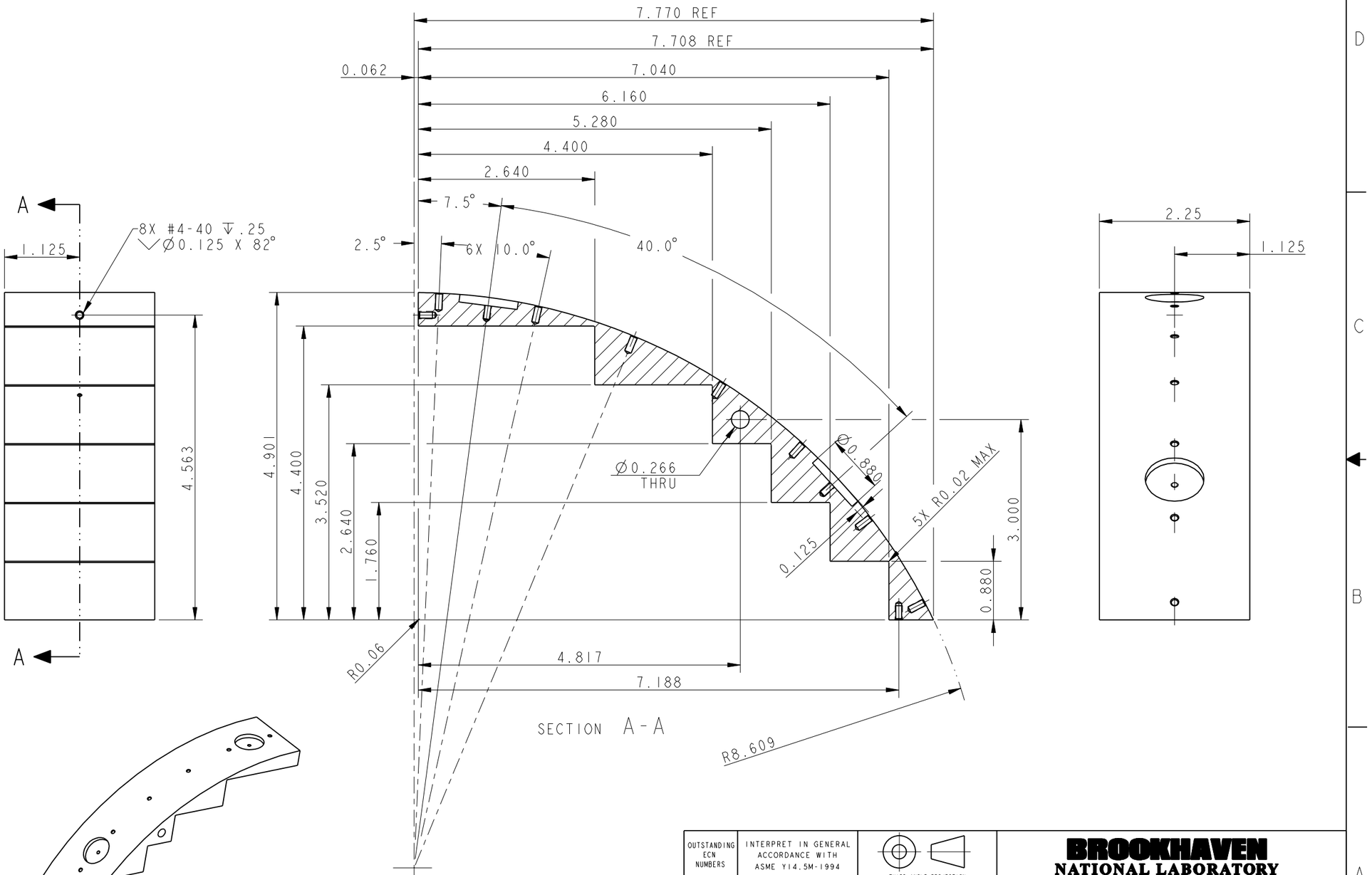

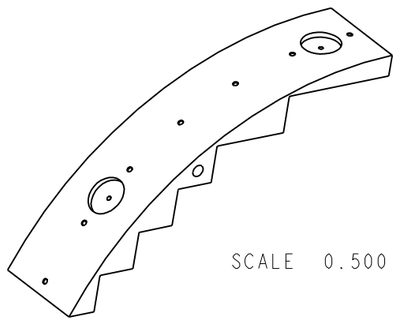

SCALE 0.500

OUTSTANDING ECN NUMBERS	INTERPRET IN GENERAL ACCORDANCE WITH ASME Y14.5M-1994	THIRD ANGLE PROJECTION			BROOKHAVEN NATIONAL LABORATORY
	UNLESS OTHERWISE SPECIFIED ALL DIMENSIONS ARE IN INCHES. DECIMAL TOLERANCES X.X ±0.1, X.XX ±0.02, X.XXX ±0.005, ANGLES ± 0.5	DRAWN BY: RUGGIERO 21-Oct-05			TITLE: PHENIX MPC RIB_TOP-BOTTOM_MODULE
		DESIGN APPROVAL: -			
		CHECKED BY: -			
		ENGINEER APPROVAL: -			
	125 FINISH; BREAK SHARP EDGES .015 MAX. .005 MIN.	SUPERVISOR APPROVAL: -			C SIZE; DRAWING NUMBER: 105-0219-019; A REV.
		Q.A. APPROVAL: -			Q.A. CATAGORY: A-3; SCALE: 1.000; WEIGHT: NA; SHEET 1 OF 1

NAME:RUGGIERO OBJECT:105-0219-019 DATE:03-Nov-05 15:50:24

REVISIONS							
REV	ZONE	ECN NO.	DESCRIPTION	BY	DATE	CKR	APP

1. MATERIAL: 1/16" THK. ALUMINUM 3003.

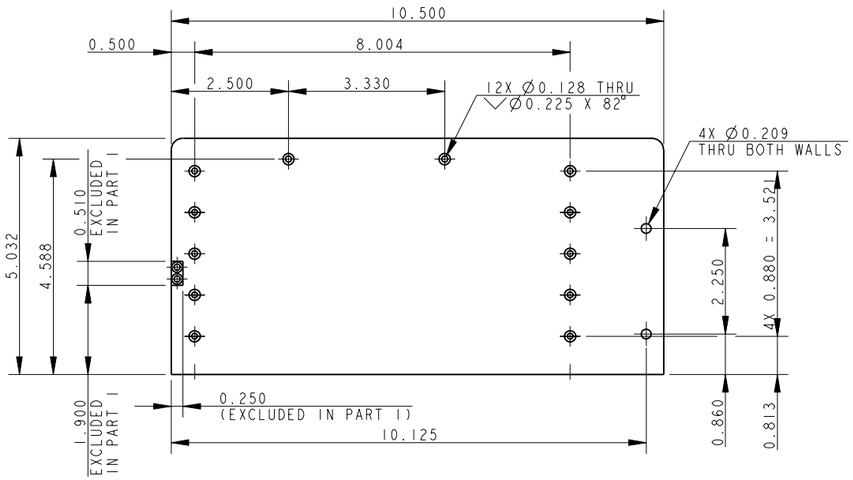

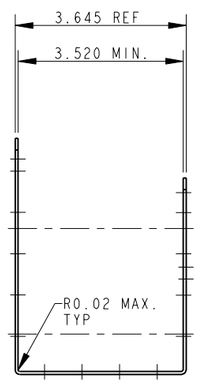

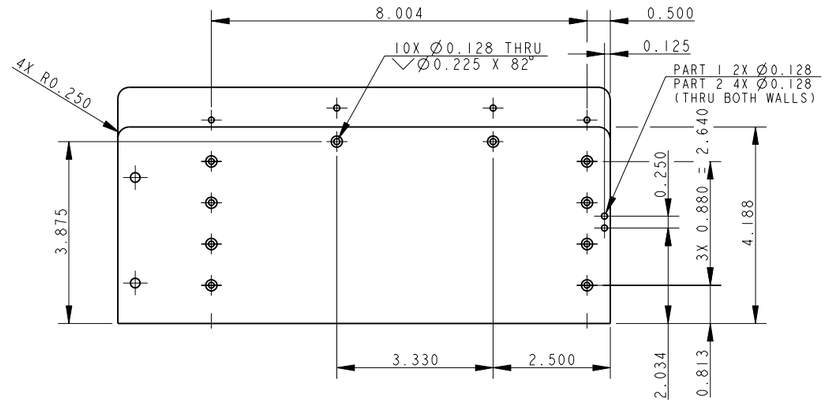

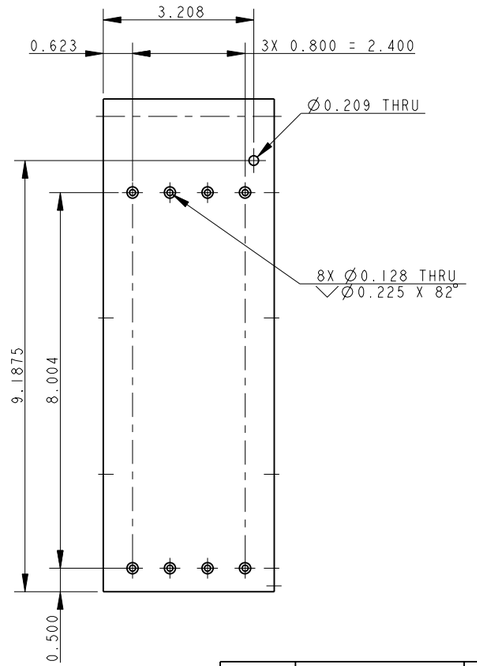

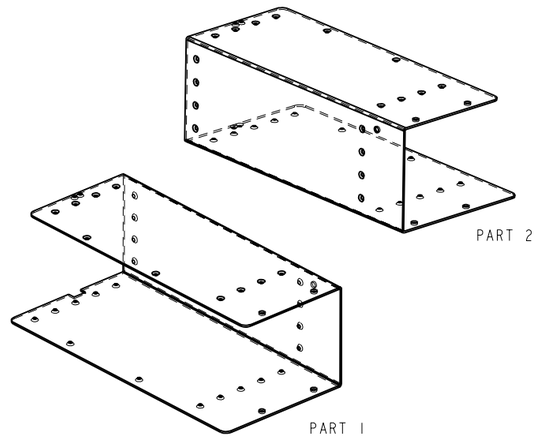

PART 1 - AS DETAILED
PART 2 - MIRROR IMAGE

OUTSTANDING ECN NUMBERS	INTERPRET IN GENERAL ACCORDANCE WITH ASME Y14.5M-1994	THIRD ANGLE PROJECTION	**BROOKHAVEN NATIONAL LABORATORY**	
	UNLESS OTHERWISE SPECIFIED ALL DIMENSIONS ARE IN INCHES. **DECIMAL TOLERANCES** X.X ±0.1 X.XX ±0.02 X.XXX ±0.005 ANGLES ± 0.5	DRAWN BY: RUGGIERO 27-Oct-05; DESIGN APPROVAL; CHECKED BY; ENGINEER APPROVAL; SUPERVISOR APPROVAL; Q.A. APPROVAL	TITLE: PHENIX MPC SKIN_LEFT-RIGHT_MODULE	
	125 FINISH; BREAK SHARP EDGES .015 MAX. .005 MIN.		C SIZE; DRAWING NUMBER: 105-0219-018	A REV.
			Q.A. CATAGORY: A-3; SCALE: 0.500; WEIGHT: NA; SHEET 1 OF 1	

NAME:RUGGIERO OBJECT:105-0219-018 DATE:03-Nov-05 15:58:45

REVISIONS							
REV	ZONE	ECN NO.	DESCRIPTION	BY	DATE	CKR	APP

1. MATERIAL: ALUMINUM 3003 1/16" THK

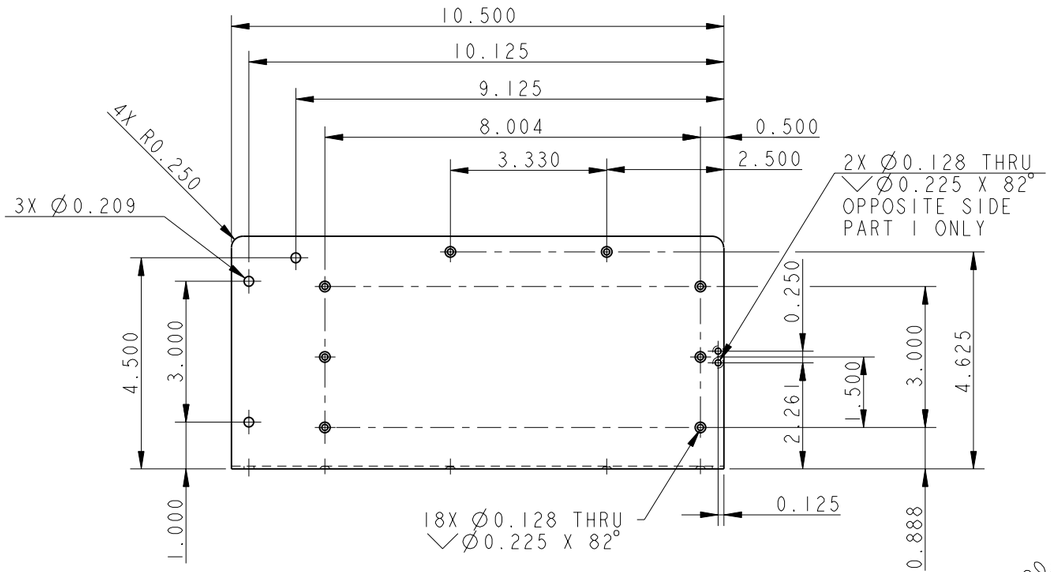

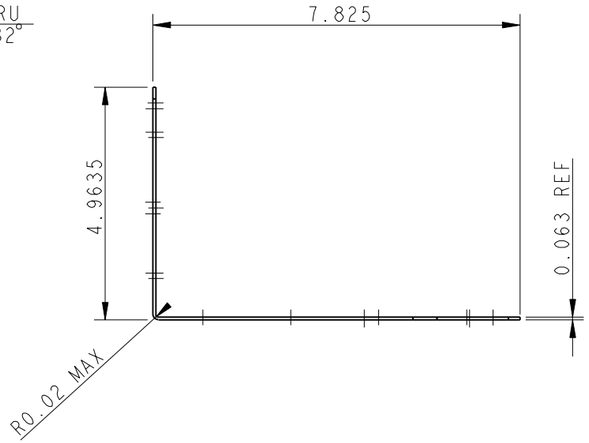

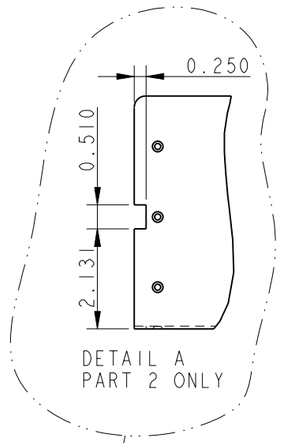

DETAIL A
PART 2 ONLY

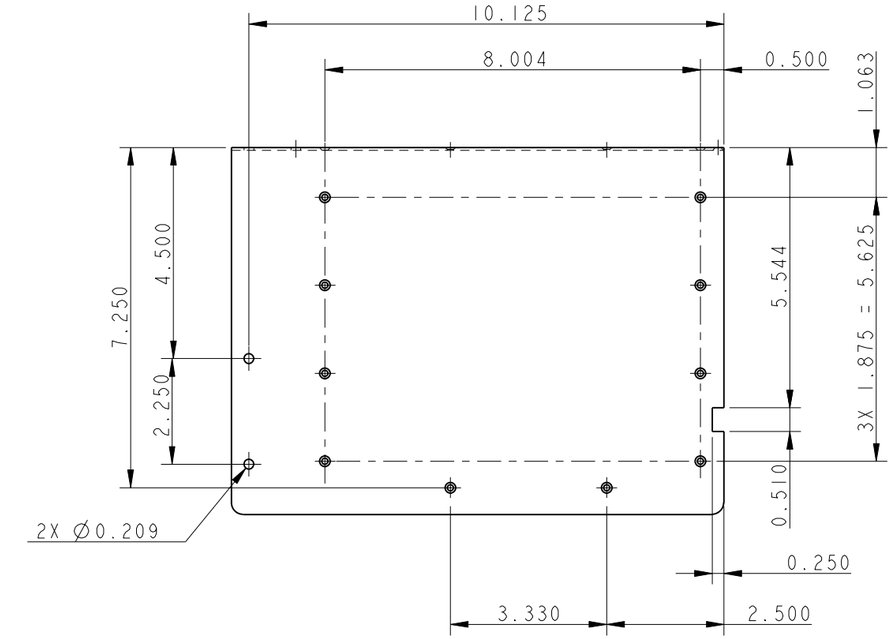

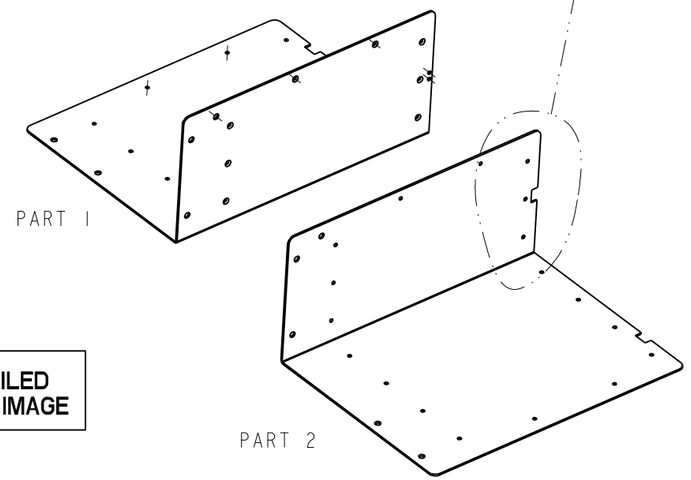

PART 1 - AS DETAILED
PART 2 - MIRROR IMAGE

OUTSTANDING ECN NUMBERS	INTERPRET IN GENERAL ACCORDANCE WITH ASME Y14.5M-1994	THIRD ANGLE PROJECTION		**BROOKHAVEN NATIONAL LABORATORY**
	UNLESS OTHERWISE SPECIFIED ALL DIMENSIONS ARE IN INCHES. **DECIMAL TOLERANCES** X.X ±0.1 X.XX ±0.02 X.XXX ±0.005 ANGLES ± 0.5	DRAWN BY: RUGGIERO 06-Oct-05	TITLE: PHENIX MPC INNER-SKIN_TOP-BOTTOM_MODULE	
		DESIGN APPROVAL: - -		
		CHECKED BY: - -		
		ENGINEER APPROVAL: - -		
	125 FINISH; BREAK SHARP EDGES - - MAX. MIN.	SUPERVISOR APPROVAL: - -	C SIZE; DRAWING NUMBER: 105-0219-017; A REV.	
		Q.A. APPROVAL: - -	Q.A. CATAGORY: A-4; SCALE: 0.500; WEIGHT: NA; SHEET 1 OF 1	

NAME:RUGGIERO OBJECT:105-0219-017 DATE:03-Nov-05 15:22:50

REVISIONS							
REV	ZONE	ECN NO.	DESCRIPTION	BY	DATE	CKR	APP

1. MATERIAL: ALUMINUM 6061-T6 1/16" THK..

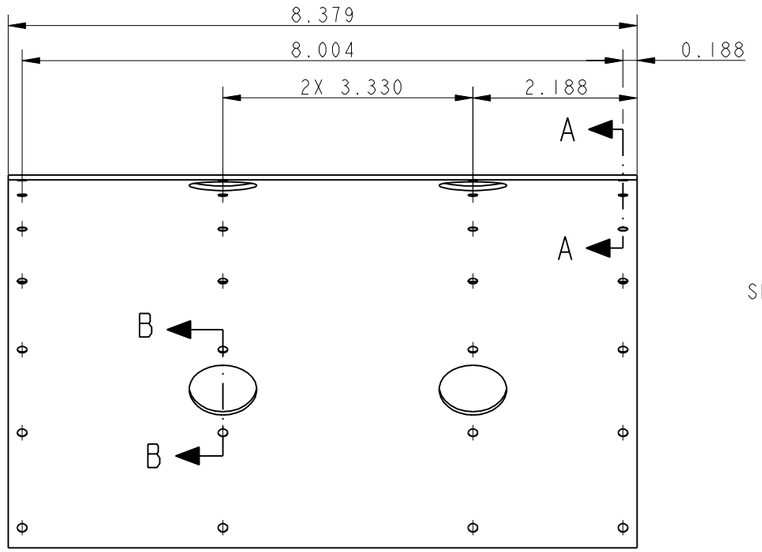

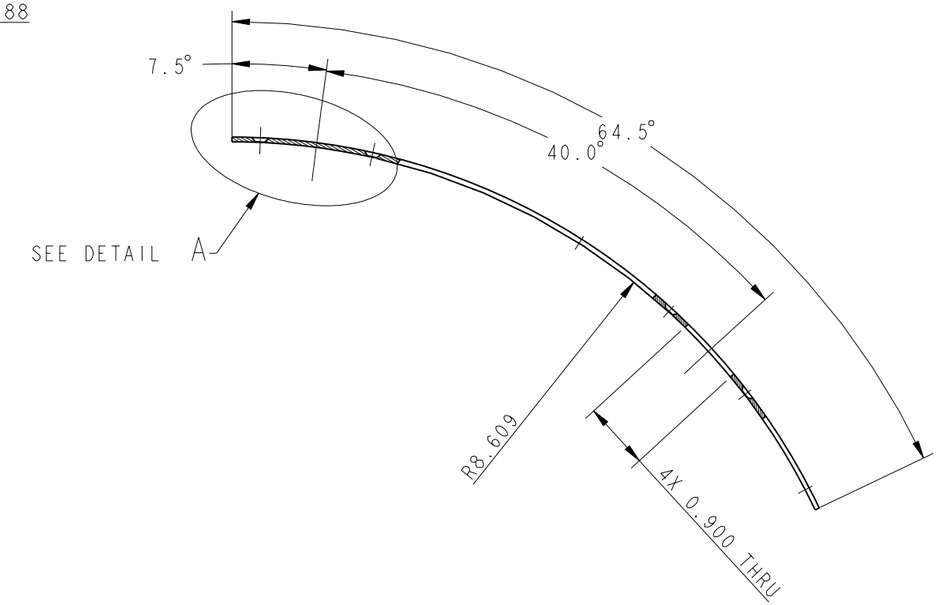

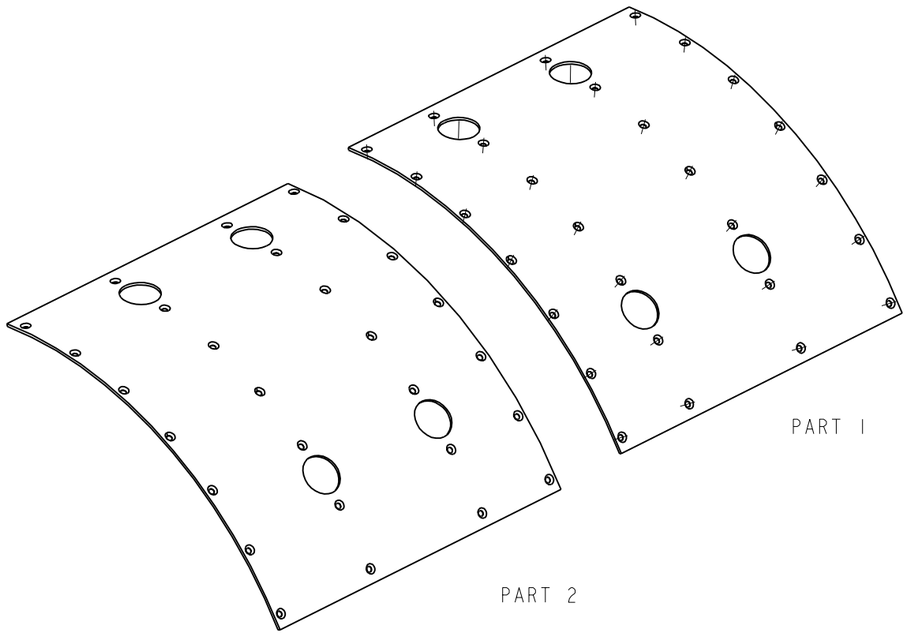

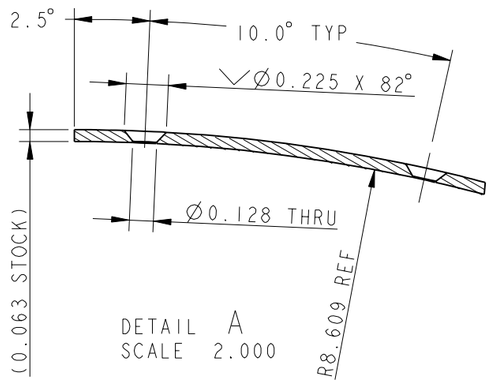

PART 1 - AS DETAILED
PART 2 - MIRROR IMAGE

OUTSTANDING ECN NUMBERS	INTERPRET IN GENERAL ACCORDANCE WITH ASME Y14.5M-1994	THIRD ANGLE PROJECTION			BROOKHAVEN NATIONAL LABORATORY
	UNLESS OTHERWISE SPECIFIED ALL DIMENSIONS ARE IN INCHES	DRAWN BY	RUGGIERO	05-Oct-05	TITLE: PHENIX MPC SKIN-RADIAL-TOP-BOTTOM_MODULE
	DECIMAL TOLERANCES X.X ±0.1 X.XX ±0.02 X.XXX ±0.005 ANGLES ± 0.5	DESIGN APPROVAL	-	-	
		CHECKED BY	-	-	
		ENGINEER APPROVAL	-	-	
	125 FINISH; BREAK SHARP EDGES .015 MAX. .005 MIN.	SUPERVISOR APPROVAL	-	-	C SIZE; DRAWING NUMBER: 105-0219-016; A REV.
		Q.A. APPROVAL	-	-	Q.A. CATAGORY: A-3; SCALE: 0.800; WEIGHT: NA; SHEET 1 OF 1

NAME:RUGGIERO OBJECT:105-0219-016 DATE:03-Nov-05 15:22:21

1. MATERIAL: ALUMINUM 6061-T6.

REVISIONS							
REV	ZONE	ECN NO.	DESCRIPTION	BY	DATE	CKR	APP

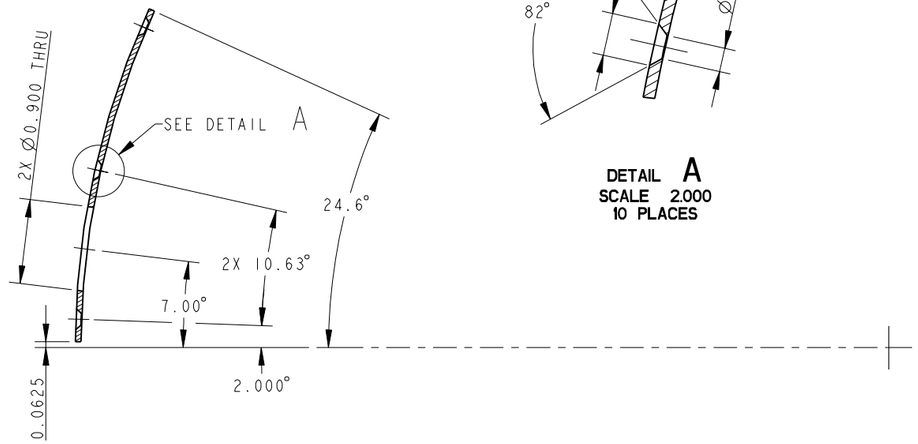

SECTION A-A

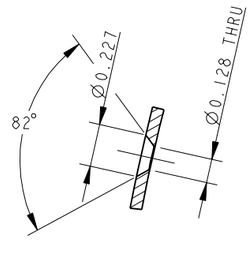

DETAIL A
SCALE 2.000
10 PLACES

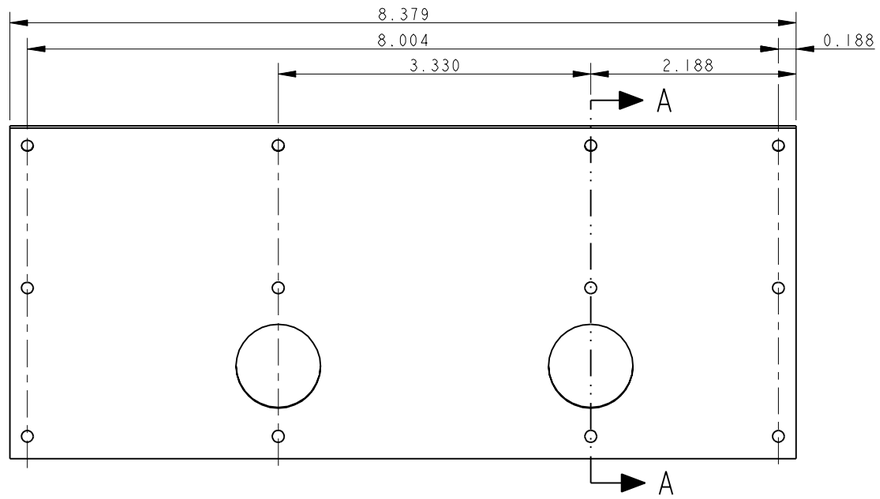

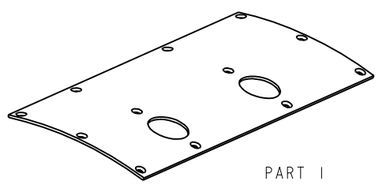

PART 1

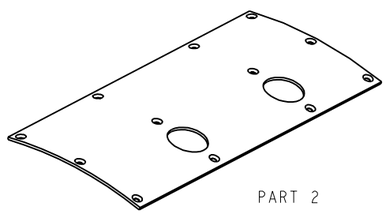

PART 2

PART 1 - AS DETAILED
PART 2 - MIRROR IMAGE

OUTSTANDING ECN NUMBERS	INTERPRET IN GENERAL ACCORDANCE WITH ASME Y14.5M-1994	THIRD ANGLE PROJECTION	BROOKHAVEN NATIONAL LABORATORY	
	UNLESS OTHERWISE SPECIFIED ALL DIMENSIONS ARE IN INCHES. DECIMAL TOLERANCES X.X ±0.1 X.XX ±0.02 X.XXX ±0.005 ANGLES ± 0.5	DRAWN BY: RUGGIERO 31-Oct-05	TITLE: PHENIX MPC SKIN_RADIAL-LEFT-RIGHT_MODULE	
		DESIGN APPROVAL: -		
		CHECKED BY: -		
		ENGINEER APPROVAL: -		
	125 FINISH; BREAK SHARP EDGES .015 MAX. .005 MIN.	SUPERVISOR APPROVAL: -	C SIZE; DRAWING NUMBER: 105-0219-015; A REV.	
		Q.A. APPROVAL: -	Q.A. CATAGORY: A-3; SCALE: 1.000; WEIGHT: NA; SHEET 1 OF 1	

NAME:RUGGIERO OBJECT:105-0219-015 DATE:03-Nov-05 15:21:31

REVISIONS							
REV	ZONE	ECN NO.	DESCRIPTION	BY	DATE	CKR	APP

1. MATERIAL: ALUMINUM 6061-T6.

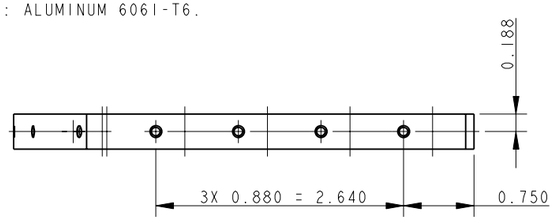

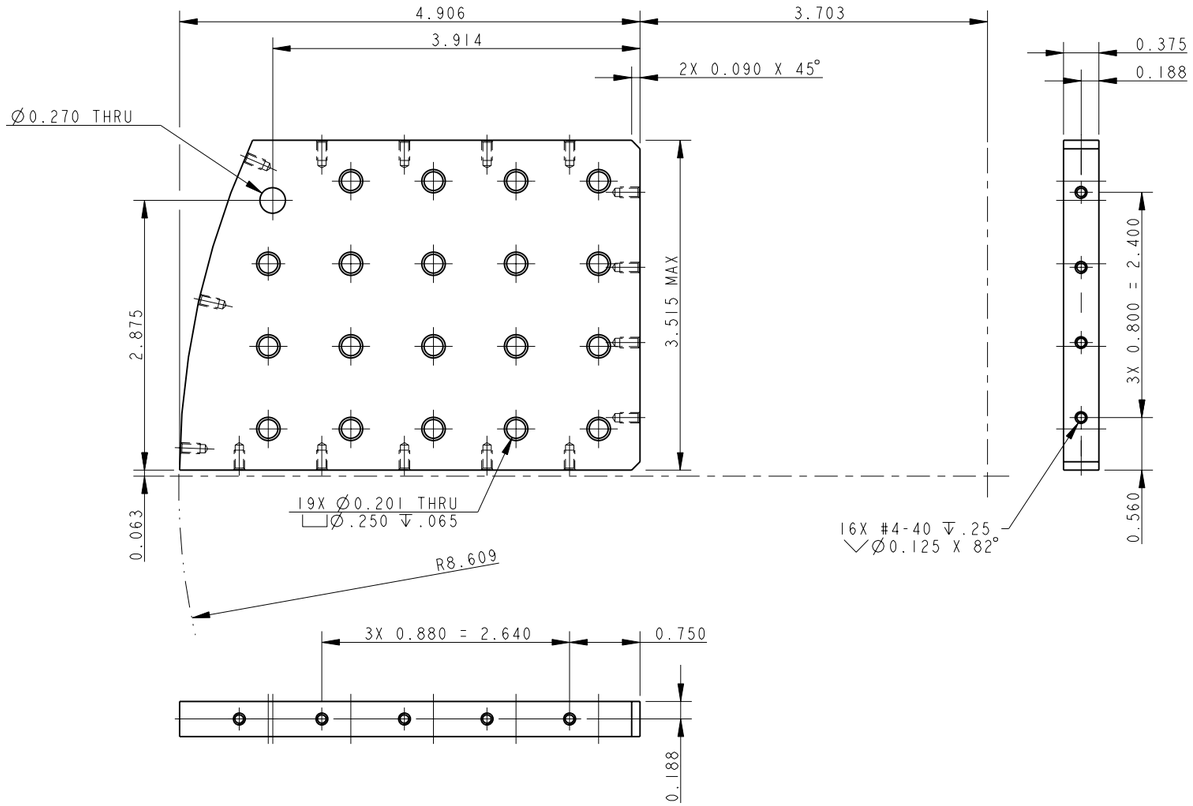

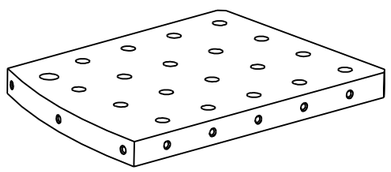

PART 1

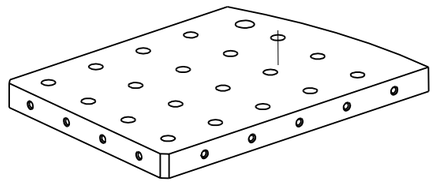

PART 2

PART 1 - MIRROR IMAGE
PART 2 - AS DETAILED

OUTSTANDING ECN NUMBERS	INTERPRET IN GENERAL ACCORDANCE WITH ASME Y14.5M-1994	THIRD ANGLE PROJECTION		BROOKHAVEN NATIONAL LABORATORY
	UNLESS OTHERWISE SPECIFIED ALL DIMENSIONS ARE IN INCHES. DECIMAL TOLERANCES X.X ±0.1, X.XX ±0.02, X.XXX ±0.005, ANGLES ± 0.5	DRAWN BY: RUGGIERO 31-Oct-05	TITLE:	PHENIX MPC ENDPLATE_BACK-LEFT-RIGHT2
		DESIGN APPROVAL: -		
		CHECKED BY: -		
		ENGINEER APPROVAL: -		
	125 FINISH; BREAK SHARP EDGES .015 MAX. .005 MIN.	SUPERVISOR APPROVAL: -	C SIZE; DRAWING NUMBER:	105-0219-014 A REV.
		Q.A. APPROVAL: -	Q.A. CATAGORY: A-3; SCALE: 1.000; WEIGHT: NA; SHEET 1 OF 1	

NAME:RUGGIERO OBJECT:105-0219-014 DATE:03-Nov-05 15:37:36

REVISIONS							
REV	ZONE	ECN NO.	DESCRIPTION	BY	DATE	CKR	APP

1. MATERIAL: ALUMINUM 6061-T6.

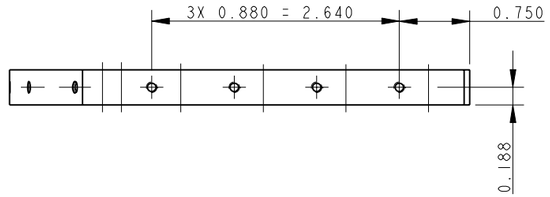

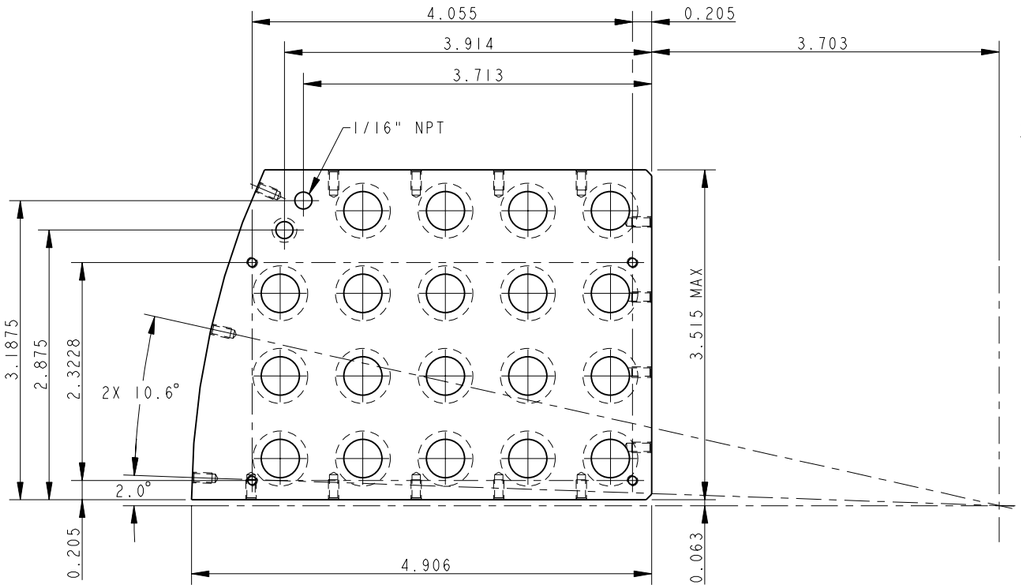

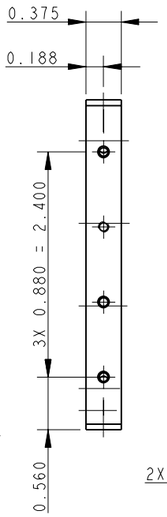

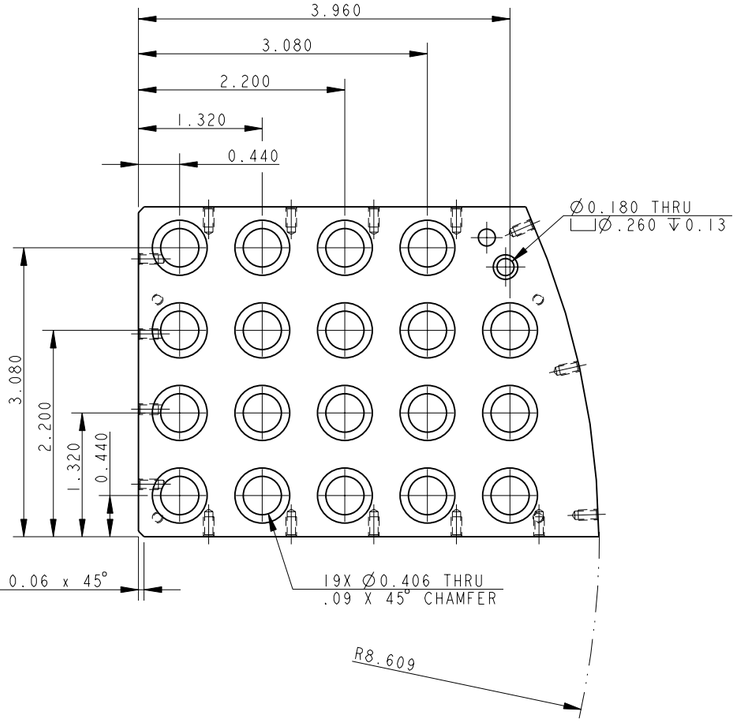

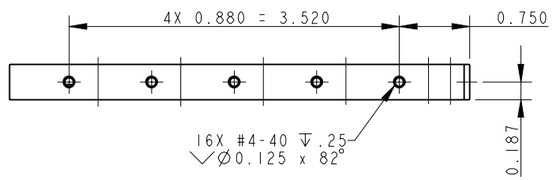

PART 1 - AS DETAILED
PART 2 - MIRROR IMAGE

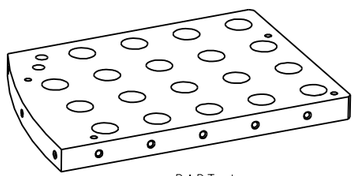

PART 1

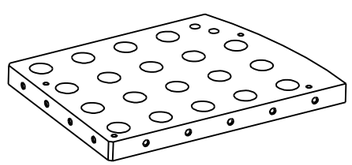

PART 2

OUTSTANDING ECN NUMBERS	INTERPRET IN GENERAL ACCORDANCE WITH ASME Y14.5M-1994	THIRD ANGLE PROJECTION	BROOKHAVEN NATIONAL LABORATORY	
	UNLESS OTHERWISE SPECIFIED ALL DIMENSIONS ARE IN INCHES. DECIMAL TOLERANCES X.X ±0.1 X.XX ±0.02 X.XXX ±0.005 ANGLES ± 0.5	DRAWN BY: RUGGIERO 27-Oct-05; DESIGN APPROVAL; CHECKED BY; ENGINEER APPROVAL; SUPERVISOR APPROVAL; Q.A. APPROVAL	TITLE: PHENIX MPC ENDPLATE_FRONT-LEFT-RIGHT	
	125 FINISH; BREAK SHARP EDGES .015 MAX. .005 MIN.		C SIZE; DRAWING NUMBER: 105-0219-013; A REV.	
			Q.A. CATAGORY: A-3; SCALE: 1.000; WEIGHT: NA; SHEET 1 OF 1	

NAME:RUGGIERO OBJECT:105-0219-013 DATE:03-Nov-05 15:46:33

MATERIAL: ALUMINUM 6061-T6.

REVISIONS						
REV	ECN NO.	DESCRIPTION	BY	DATE	CKR	APP

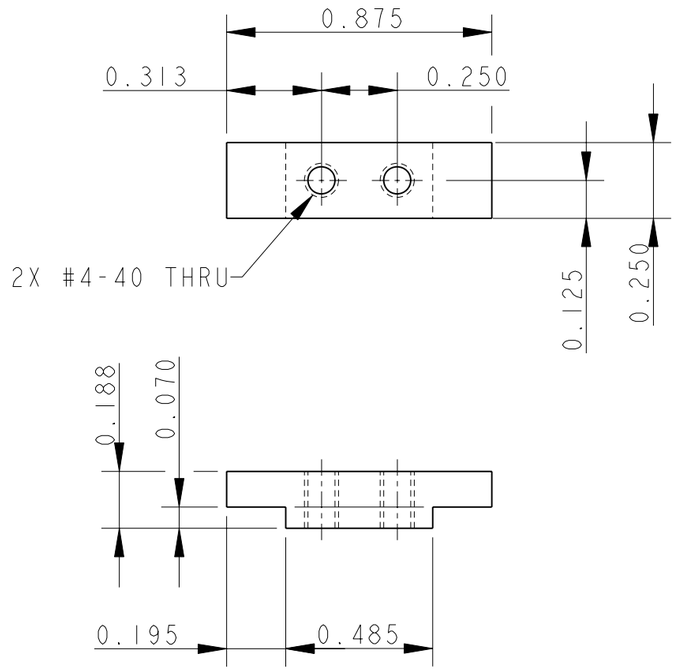

THIRD ANGLE PROJECTION

INTERPRET IN GENERAL ACCORDANCE WITH ASME Y14.5M-1994

UNLESS OTHERWISE SPECIFIED:
ALL DIMENSIONS ARE IN INCHES.
DECIMAL TOLERANCES
X.X ±0.1
X.XX ±0.02
X.XXX ±0.005
ANGLES ± 0.5

FINISH 125 ✓ | BREAK EDGES: .015 MAX. .005 MIN.

NEXT ASSEMBLY

DRAWN BY	RUGGIERO	01-Nov-05
CHECKED BY	-	
COGNIZANT ENGINEER/ SCIENTIST		
Q.A. APPROVAL	-	

BROOKHAVEN NATIONAL LABORATORY
managed by Brookhaven Science Associates
Upton, NY 11973
for the U.S. Department of Energy

PROJECT: PHENIX
SYSTEM: MPC
MODEL/DRAWING NAME: LOCKING_TAB

SIZE: | DRAWING NUMBER: 105-0219-012 | REV. A

Q.A. CATEGORY: A-3 | SCALE: 2.000 | WEIGHT: NA | SHEET: 1/1

NAME:RUGGIERO OBJECT:105-0219-012 DATE:03-Nov-05 15:12:38

REVISIONS							
REV	ZONE	ECN NO.	DESCRIPTION	BY	DATE	CKR	APP

1. MATERIAL: ALUMINUM 6061-T6.

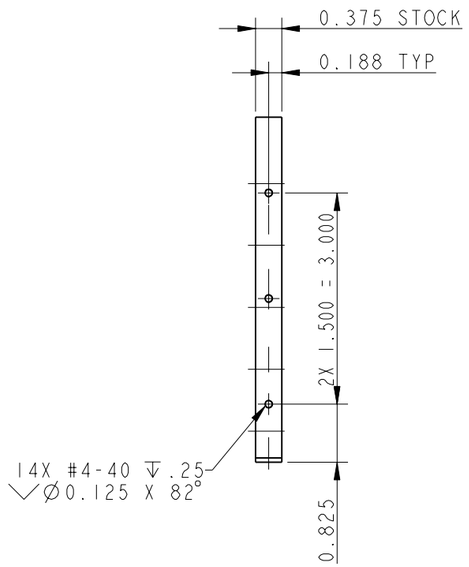

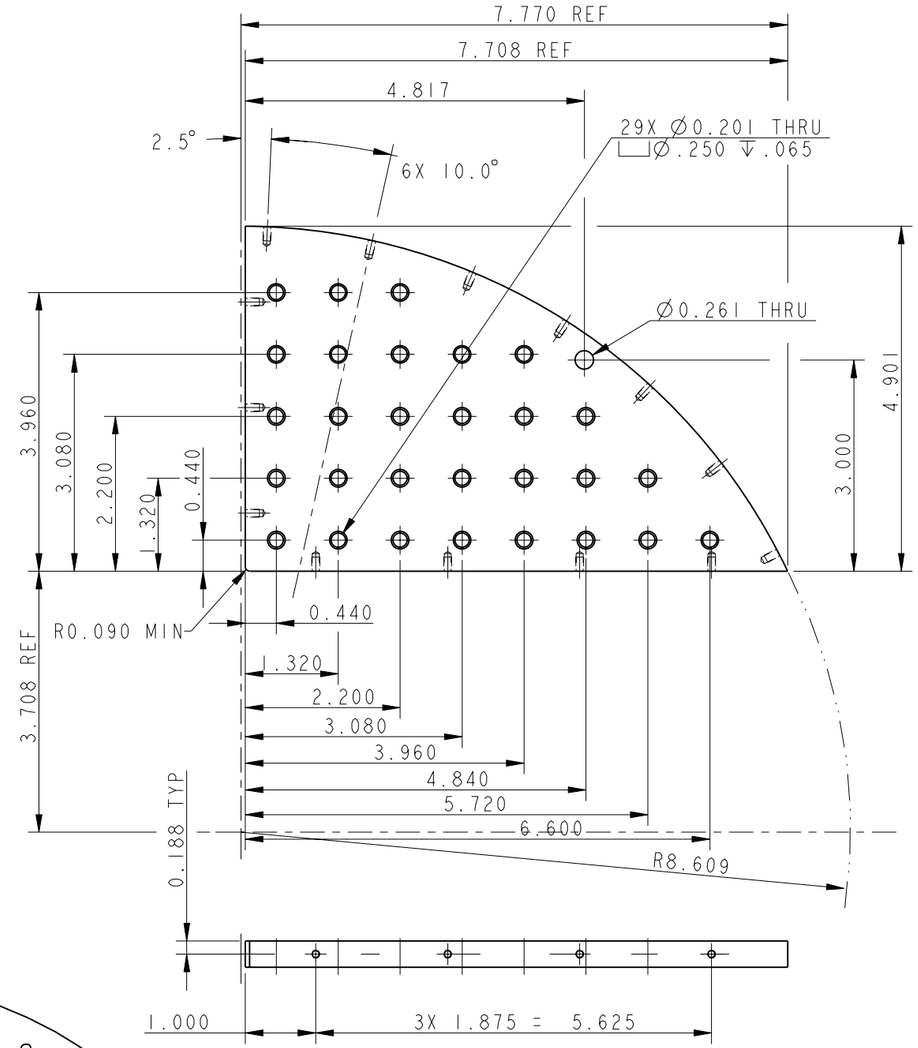

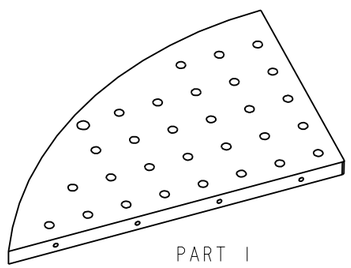

PART 1

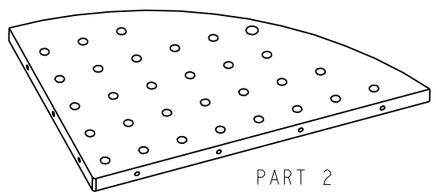

PART 2

PART 1 - AS DETAILED
PART 2 - MIRROR IMAGE

OUTSTANDING ECN NUMBERS	INTERPRET IN GENERAL ACCORDANCE WITH ASME Y14.5M-1994	THIRD ANGLE PROJECTION			BROOKHAVEN NATIONAL LABORATORY
	UNLESS OTHERWISE SPECIFIED ALL DIMENSIONS ARE IN INCHES. DECIMAL TOLERANCES X.X ±0.1, X.XX ±0.02, X.XXX ±0.005, ANGLES ± 0.5	DRAWN BY: RUGGIERO 05-Oct-05			TITLE: PHENIX MPC ENDPLATE_BACK_TOP-BOTTOM
	125 FINISH; BREAK SHARP EDGES .015 MAX. .005 MIN.	DESIGN APPROVAL: -	CHECKED BY: -	ENGINEER APPROVAL: -	SUPERVISOR APPROVAL: -	Q.A. APPROVAL: -
		SIZE: C	DRAWING NUMBER: 105-0219-011	REV: A	
		Q.A. CATAGORY: A-3	SCALE: 0.750	WEIGHT: NA	SHEET 1 OF 1

NAME:RUGGIERO OBJECT:105-0219-011 DATE:03-Nov-05 15:44:36

REVISIONS							
REV	ZONE	ECN NO.	DESCRIPTION	BY	DATE	CKR	APP

1. MATERIAL: ALUMINUM 6061-T6.

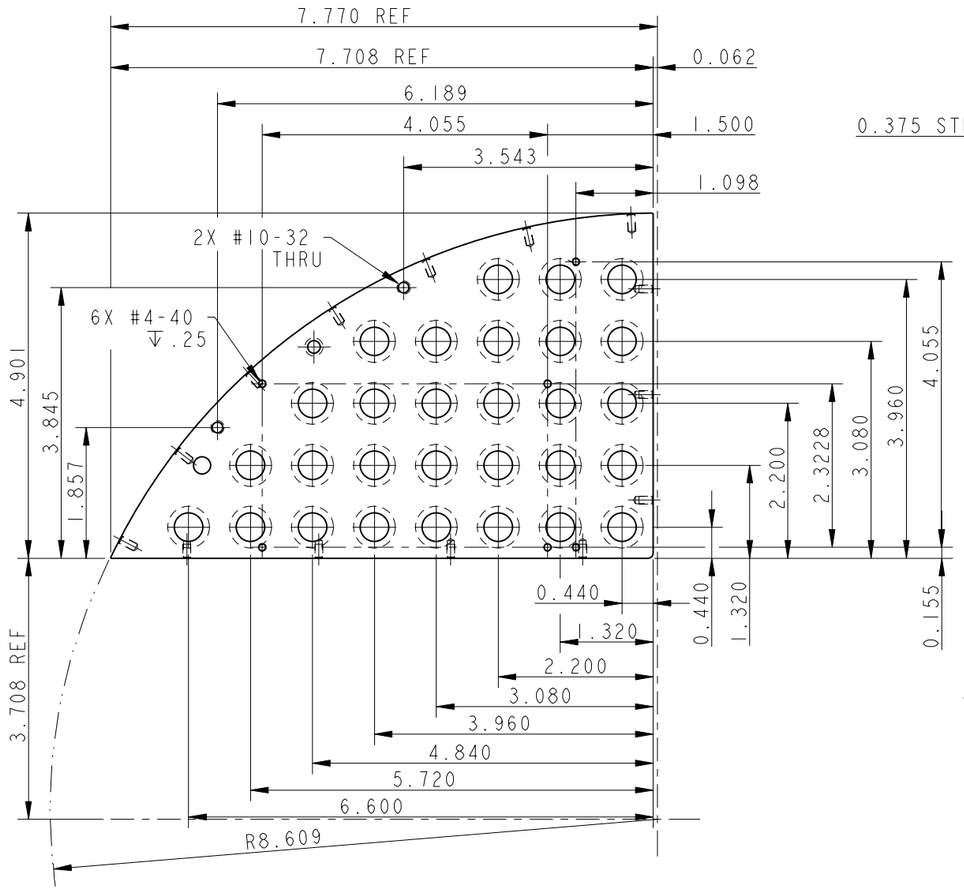

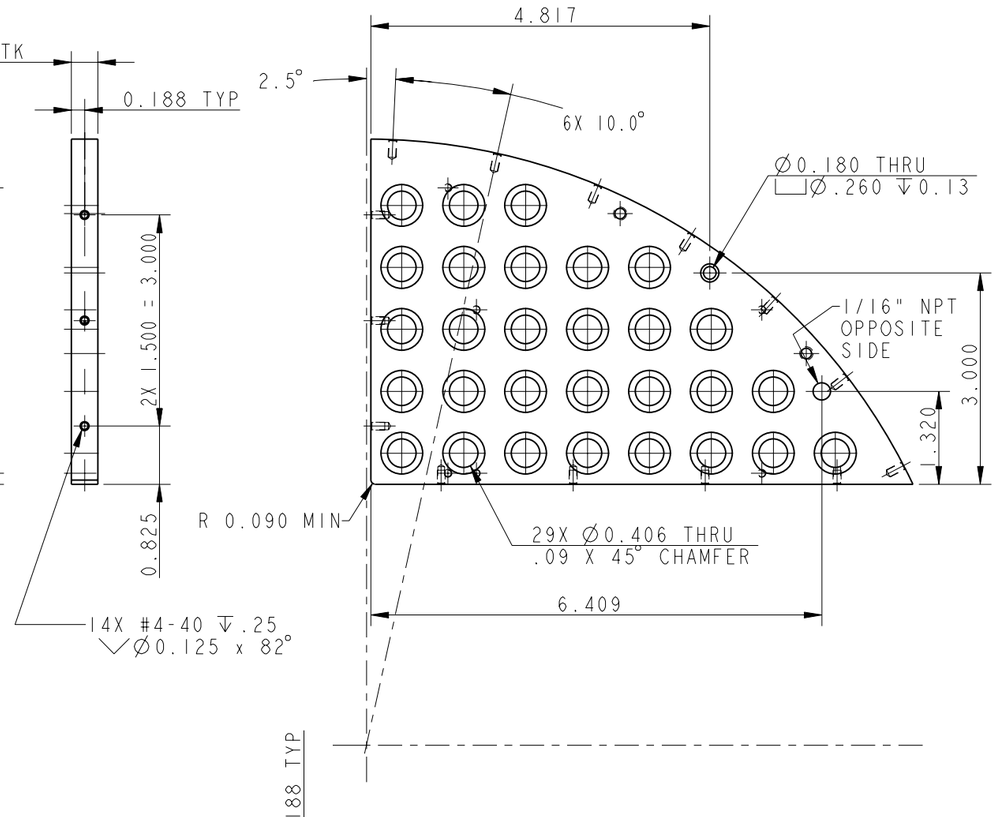

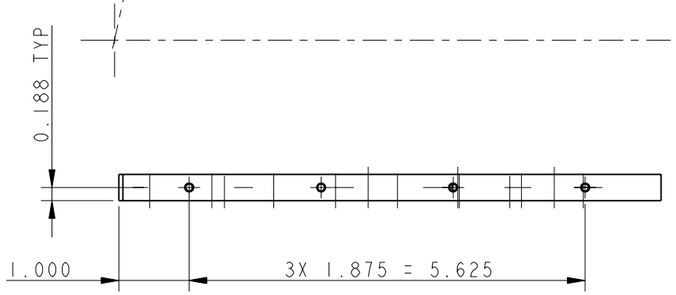

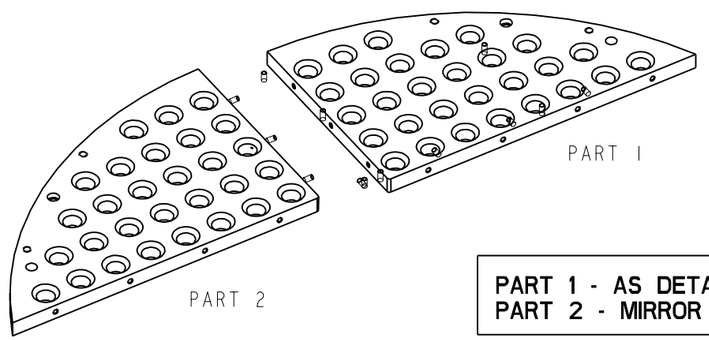

PART 1 - AS DETAILED
PART 2 - MIRROR IMAGE

OUTSTANDING ECN NUMBERS	INTERPRET IN GENERAL ACCORDANCE WITH ASME Y14.5M-1994	THIRD ANGLE PROJECTION			BROOKHAVEN NATIONAL LABORATORY
	UNLESS OTHERWISE SPECIFIED ALL DIMENSIONS ARE IN INCHES. DECIMAL TOLERANCES X.X ±0.1, X.XX ±0.02, X.XXX ±0.005, ANGLES ± 0.5	DRAWN BY: RUGGIERO 04-Oct-05	TITLE: PHENIX MPC ENDPLATE_FRONT-TOP-BOTTOM		
	125 FINISH; BREAK SHARP EDGES .015 MAX. .005 MIN.	DESIGN APPROVAL: -			
		CHECKED BY: -			
		ENGINEER APPROVAL: -			
		SUPERVISOR APPROVAL: -	C SIZE; DRAWING NUMBER: 105-0219-010		A REV.
		Q.A. APPROVAL: -	Q.A. CATAGORY: A-3; SCALE: 0.750; WEIGHT: NA; SHEET 1 OF 1		

NAME:RUGGIERO OBJECT:105-0219-010 DATE:03-Nov-05 15:10:00

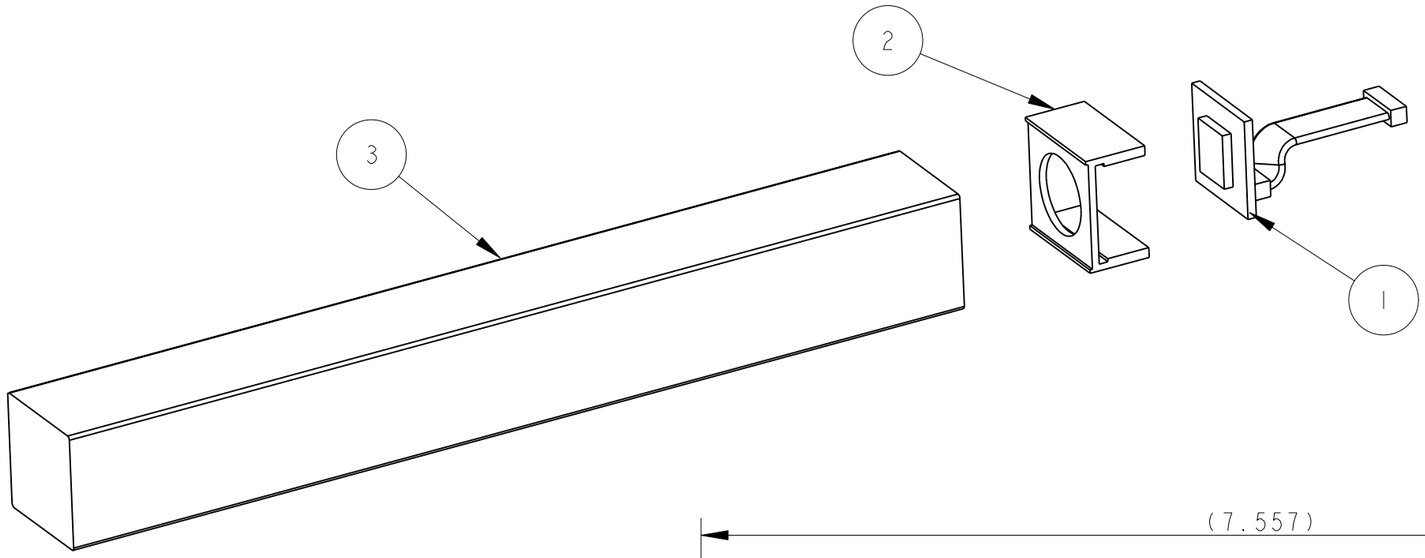

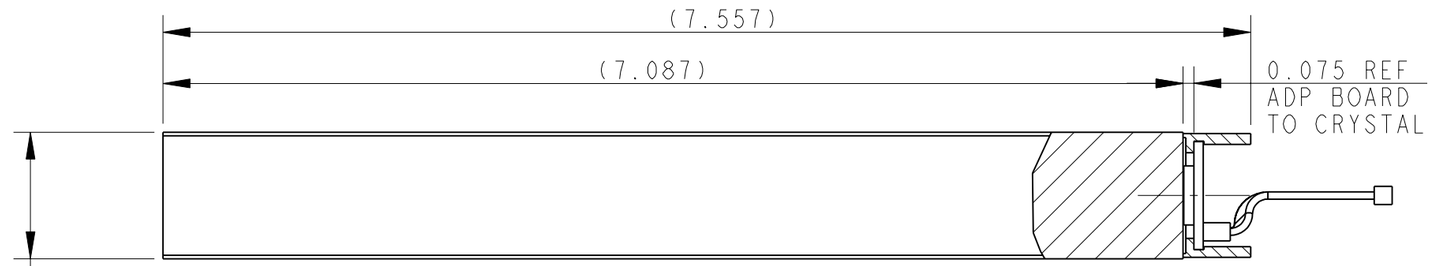

DET	QTY	DESCRIPTION	PART NUMBER	MODEL NAME
3	1	CRYSTAL	ON HAND	CRYSTAL
2	1	APD HOLDER	ON HAND	APD-HOLDER
1	1	APD	ON HAND	APD

THIRD ANGLE PROJECTION

NEXT ASSEMBLY

INTERPRET IN GENERAL ACCORDANCE WITH ASME Y14.5M-1994

UNLESS OTHERWISE SPECIFIED:
ALL DIMENSIONS ARE IN INCHES.
DECIMAL TOLERANCES
X.X ±0.1
X.XX ±0.01
X.XXX ±0.001
ANGLES ± 0.5

DRAWN BY:	RUGGIERO	07-Oct-05
CHECKED BY:	-	
COGNIZANT ENGINEER/ SCIENTIST:		
Q.A. APPROVAL:	-	
SAFETY ENGINEER:		

NA ✓ FINISH

BREAK EDGES: MAX. NA MIN. NA

CDD DWG NUMBER

BROOKHAVEN NATIONAL LABORATORY
managed by Brookhaven Science Associates
for the U.S. Department of Energy
Upton, NY 11973

PROJECT: PHENIX
SYSTEM: MPC
MODEL/DRAWING NAME: CRYSTAL-ASSEMBLY

SIZE B | DRAWING NUMBER: 105-0219-004 | REV. A

Q.A. CATEGORY: A-3 | SCALE: 1.000 | WEIGHT: NA | SHEET 1 OF 1

NAME:RUGGIERO OBJECT:105-0219-004 DATE:03-Nov-05 15:09:26

REVISIONS							
REV	ZONE	ECN NO.	DESCRIPTION	BY	DATE	CKR	APP

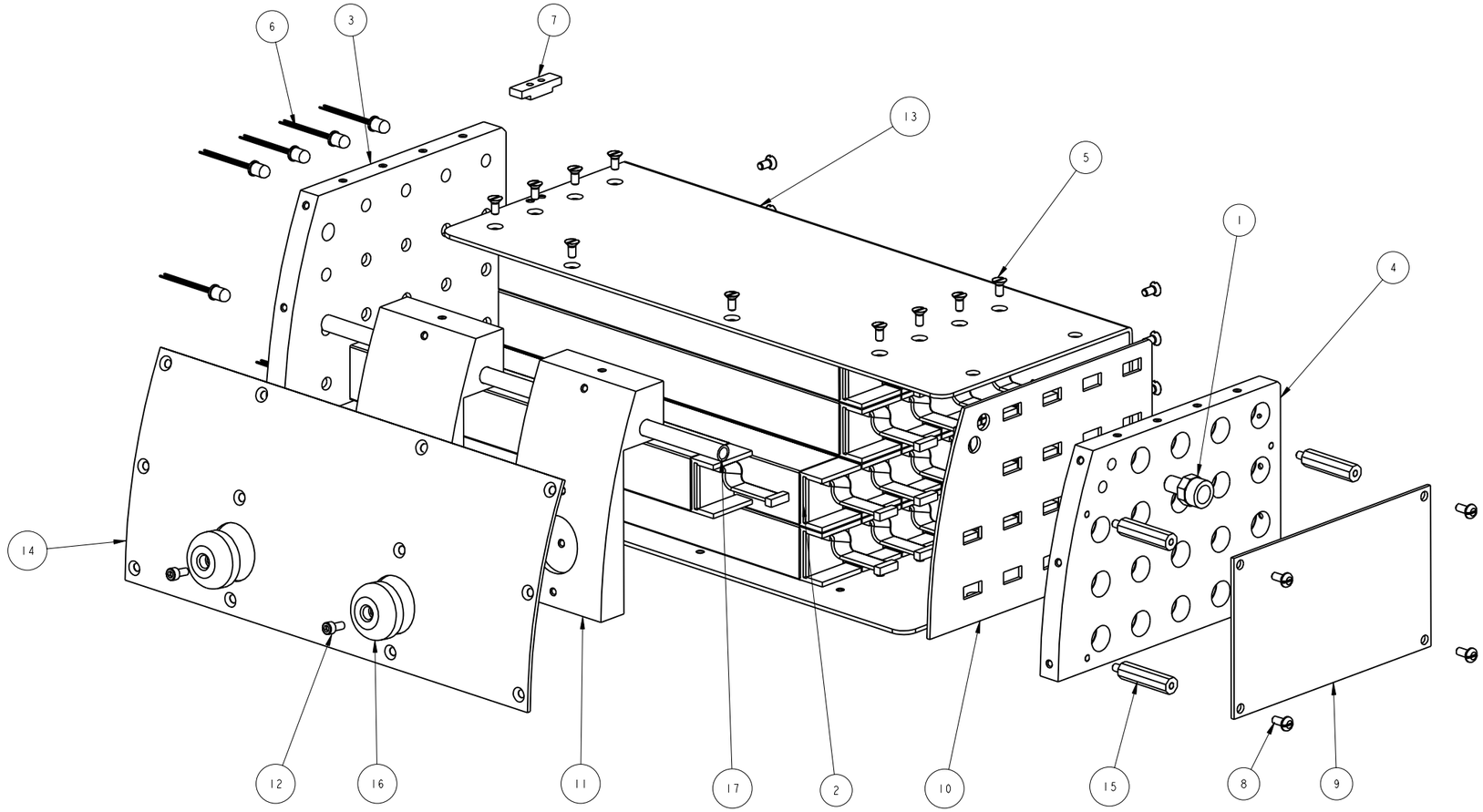

DET	QTY	MODEL NAME / DESCRIPTION	TYPE	DRAWING NUMBER
17	1	WIRE_TUBE	PART	3/8 DIA. X 0.035 ALUM. TUBING - 8.25 LG.
16	2	TEFLON_PAD	PART	105-0219-024
15	4	STANDOFF-MALE-FEMALE-75	PART	KEYSTONE CAT# 1944
14	1	SKIN_RADIAL-LEFT-RIGHT_MODULE	PART	105-0219-015 PART #2
13	1	SKIN_LEFT-RIGHT_MODULE	PART	105-0219-018 PART #2
12	2	SHCS-4-40	PART	3/8" LG STAINLESS STEEL
11	2	RIB_LEFT-RIGHT_MODULE	PART	105-0219-020 PART #2
10	1	POLY-GASKET-LEFT-RIGHT	PART	105-0219-021
9	1	PC-BOARD	PART	ON HAND
8	4	PAN-HD-4-40	PART	1/4" LG STAINLESS STEEL
7	1	LOCKING_TAB	PART	105-0219-012
6	18	LED	PART	ON HAND
5	30	FHCS-4-40	PART	1/4" LG STAINLESS STEEL
4	1	ENDPLATE_FRONT-LEFT-RIGHT	PART	105-0219-013 PART #2
3	1	ENDPLATE_BACK-LEFT-RIGHT	PART	105-0219-014 PART #2
2	19	CRYSTAL-ASSEMBLY	ASSEMBLY	105-0219-004
1	1	025-NPT-SWAGE-FITTING	PART	BRASS - ON HAND

NEXT ASSEMBLY

THIRD ANGLE PROJECTION

INTERPRET IN GENERAL ACCORDANCE WITH ASME Y14.5M-1994

UNLESS OTHERWISE SPECIFIED: ALL DIMENSIONS ARE IN MILLIMETERS DECIMAL TOLERANCES
X.X ±0.1
X.XX ±0.01
X.XXX ±0.001
ANGLES ± 0.5

NA FINISH

NA MAX. NA MIN.

DRAWN BY	RUGGIERO	25-Oct-05
DESIGN APPROVAL		
CHECKED BY		
ENGINEER APPROVAL		
SUPERVISOR APPROVAL		
Q.A. APPROVAL		
SAFETY ENGINEERING		

BROOKHAVEN NATIONAL LABORATORY
managed by Brookhaven Science Associates for the U.S. Department of Energy
Upton, NY 11973

PROJECT: PHENIX
SYSTEM: MPC
MODEL/DRAWING NAME: LEFT-RIGHT_MODULE_ASSY

SIZE D | DRAWING NUMBER: 105-0219-003 | REV: A

Q.A. CATAGORY: A-3 | SCALE: 1.000 | WEIGHT: NA | SHEET 1 OF 2

			REV
			SHEET
			REVISION STATUS OF SHEETS

CDD DWG NUMBER

Notes: Unless otherwise specified:

REV 1

SHEET 1 OF 2

DWG NO 105-0219-003

NAME:RUGGIERO OBJECT:105-0219-003_1 DATE:03-Nov-05 15:39:13

REVISIONS							
REV	ZONE	ECN NO.	DESCRIPTION	BY	DATE	CKR	APP

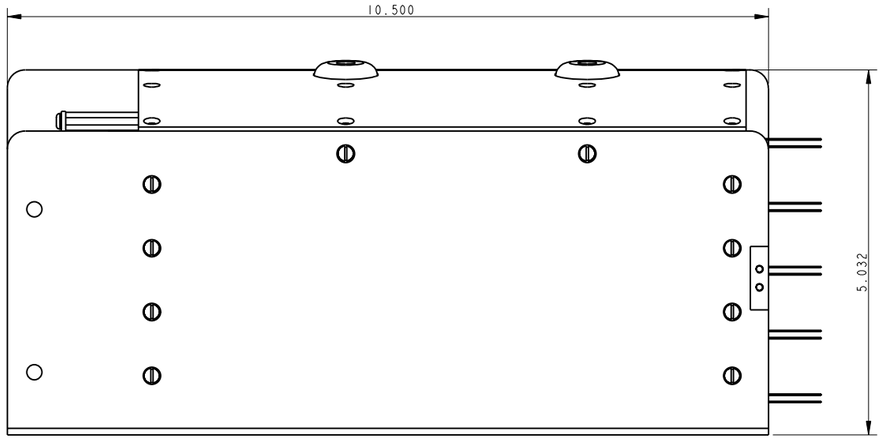

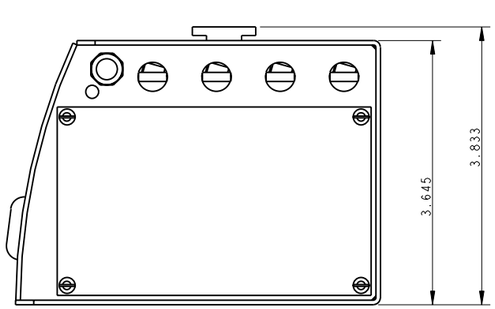

DET	QTY	MODEL NAME / DESCRIPTION	TYPE	DRAWING NUMBER
17	1	WIRE_TUBE	PART	3/8 DIA. X 0.035 ALUM. TUBING - 8.25 LG.
16	2	TEFLON_PAD	PART	105-0219-024
15	4	STANDOFF-MALE-FEMALE-75	PART	KEYSTONE CAT# 1944
14	1	SKIN_RADIAL-LEFT-RIGHT_MODULE	PART	105-0219-015
13	1	SKIN_LEFT-RIGHT_MODULE	PART	105-0219-018
12	2	SHCS-4-40	PART	3/8" LG STAINLESS STEEL
11	2	RIB_LEFT-RIGHT_MODULE	PART	105-0219-020
10	1	POLY-GASKET-LEFT-RIGHT	PART	105-0219-021
9	1	PC-BOARD	PART	ON HAND
8	4	PAN-HD-4-40	PART	1/4" LG STAINLESS STEEL
7	1	LOCKING_TAB	PART	105-0219-012
6	18	LED	PART	ON HAND
5	30	FHCS-4-40	PART	1/4" LG STAINLESS STEEL
4	1	ENDPLATE_FRONT-LEFT-RIGHT	PART	105-0219-013
3	1	ENDPLATE_BACK-LEFT-RIGHT	PART	105-0219-014
2	19	CRYSTAL-ASSEMBLY	ASSEMBLY	105-0219-004
1	1	.025-NPT-SWAGE-FITTING	PART	BRASS - ON HAND

NEXT ASSEMBLY

THIRD ANGLE PROJECTION

INTERPRET IN GENERAL ACCORDANCE WITH ASME Y14.5M-1994

UNLESS OTHERWISE SPECIFIED: ALL DIMENSIONS ARE IN MILLIMETERS
DECIMAL TOLERANCES
X.X ±0.1
X.XX ±0.01
X.XXX ±0.001
ANGLES ± 0.5

NA FINISH

NA MAT. NA MIN.

DRAWN BY	RUGGIERO	02-Nov-05
DESIGN APPROVAL	-	
CHECKED BY	-	
ENGINEER APPROVAL	-	
SUPERVISOR APPROVAL	-	
Q.A. APPROVAL	-	
SAFETY ENGINEERING		

BROOKHAVEN NATIONAL LABORATORY
managed by Brookhaven Science Associates for the U.S. Department of Energy
Upton, NY 11973

PROJECT: PHENIX
SYSTEM: MPC
MODEL/DRAWING NAME: LEFT-RIGHT_MODULE_ASSY

SIZE D | DRAWING NUMBER: 105-0219-003 | REV: A

Q.A. CATAGORY: A-3 | SCALE: 1.000 | WEIGHT: NA | SHEET 2 OF 2

REV	SHEET 2 OF 2	DWG NO 105-0219-003
B		

REVISION STATUS OF SHEETS | REV | SHEET | CDD DWG NUMBER

Notes: Unless otherwise specified:

NAME:RUGGIERO OBJECT:105-0219-003_2 DATE:03-Nov-05 15:39:15

REVISIONS							
REV	ZONE	ECN NO.	DESCRIPTION	BY	DATE	CKR	APP

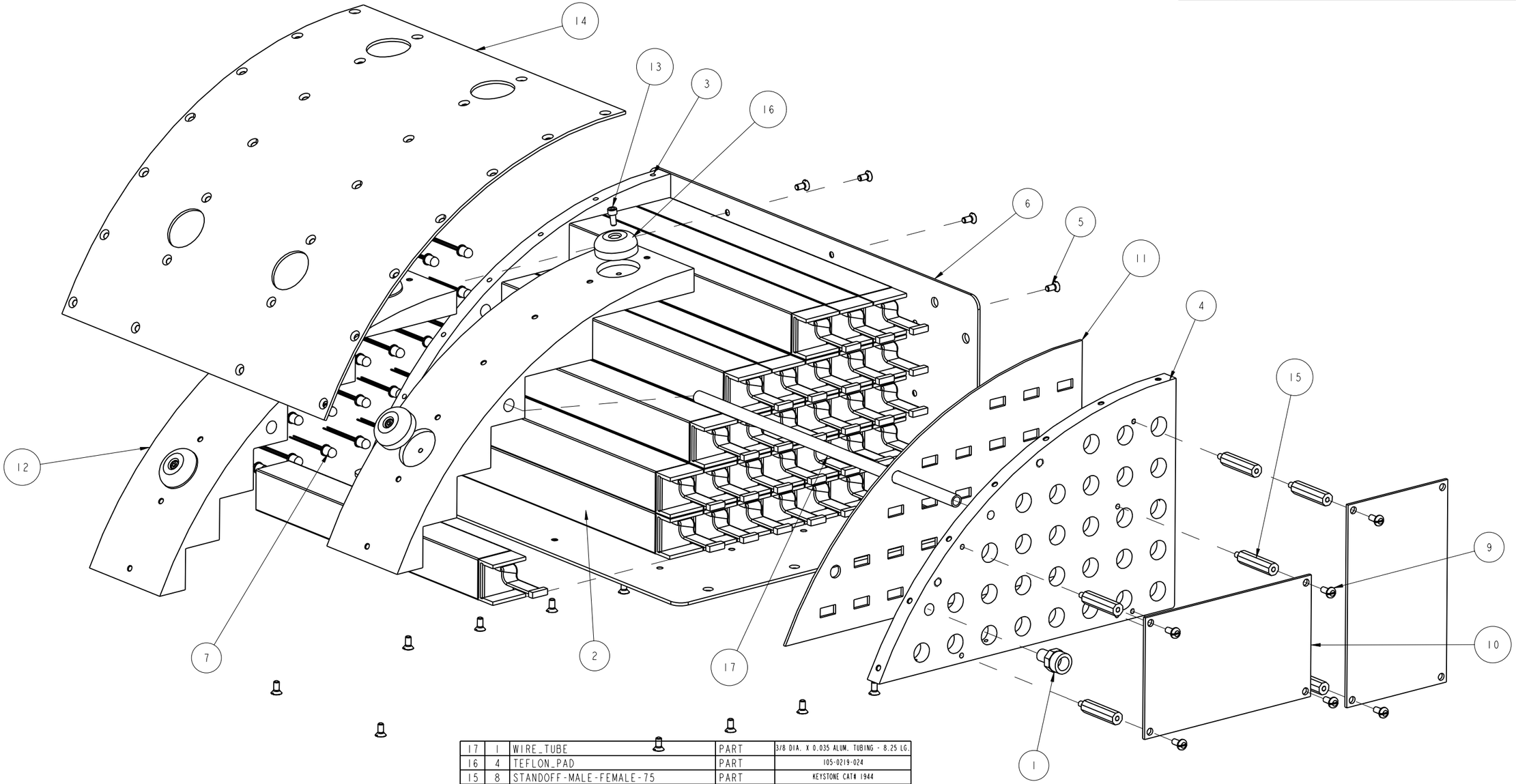

DET	QTY	MODEL NAME / DESCRIPTION	TYPE	DRAWING NUMBER
17	1	WIRE_TUBE	PART	3/8 DIA. X 0.035 ALUM. TUBING - 8.25 LG.
16	4	TEFLON_PAD	PART	105-0219-024
15	8	STANDOFF-MALE-FEMALE-75	PART	KEYSTONE CAT# 1944
14	1	SKIN-RADIAL-TOP-BOTTOM_MODULE	PART	105-0219-016 PART #1
13	4	SHCS-4-40	PART	3/8" LG STAINLESS STEEL
12	2	RIB_TOP-BOTTOM_MODULE	PART	105-0219-019
11	1	POLY-GASKET	PART	105-0219-023
10	2	PC-BOARD	PART	ON HAND
9	6	PAN-HD-4-40	PART	1/4" LG STAINLESS STEEL
8	1	LOCKING_TAB	PART	105-0219-012
7	29	LED	PART	ON HAND
6	1	INNER-SKIN_TOP-BOTTOM_MODULE	PART	105-0219-017 PART #1
5	20	FHCS-4-40	PART	1/4" LG STAINLESS STEEL
4	1	ENDPLATE_FRONT-TOP-BOTTOM	PART	105-0219-010 PART #1
3	1	ENDPLATE_BACK_TOP-BOTTOM	PART	105-0219-011 PART #1
2	29	CRYSTAL-ASSEMBLY	ASSEMBLY	105-0219-004
1	1	025-NPT-SWAGE-FITTING	PART	BRASS - ON HAND

REV
SHEET
REVISION STATUS OF SHEETS

CDD DWG NUMBER

Notes: Unless otherwise specified:

THIRD ANGLE PROJECTION

INTERPRET IN GENERAL ACCORDANCE WITH ASME Y14.5M-1994

UNLESS OTHERWISE SPECIFIED: ALL DIMENSIONS ARE IN MILLIMETERS DECIMAL TOLERANCES X.X ±0.1 X.XX ±0.01 X.XXX ±0.001 ANGLES ± 0.5

NA FINISH NA MAX. NA MIN.

NEXT ASSEMBLY

DRAWN BY	RUGGIERO	06-Oct-05
DESIGN APPROVAL	-	
CHECKED BY	-	
ENGINEER APPROVAL	-	
SUPERVISOR APPROVAL	-	
Q.A. APPROVAL	-	
SAFETY ENGINEERING		

BROOKHAVEN NATIONAL LABORATORY
managed by Brookhaven Science Associates for the U.S. Department of Energy
Upton, NY 11973

PROJECT: PHENIX
SYSTEM: MPC
MODEL/DRAWING NAME: TOP-BOTTOM_MODULE_ASSEMBLY
SIZE: D
DRAWING NUMBER: 105-0219-002
REV.: -
Q.A. CATAGORY: A-3
SCALE: 1.000
WEIGHT: NA
SHEET 1 OF 2

REV
SHEET 1 OF 2
DWG NO 105-0219-002

NAME:RUGGIERO OBJECT:105-0219-002_1 DATE:03-Nov-05 14:57:18

REVISIONS							
REV	ZONE	ECN NO.	DESCRIPTION	BY	DATE	CKR	APP

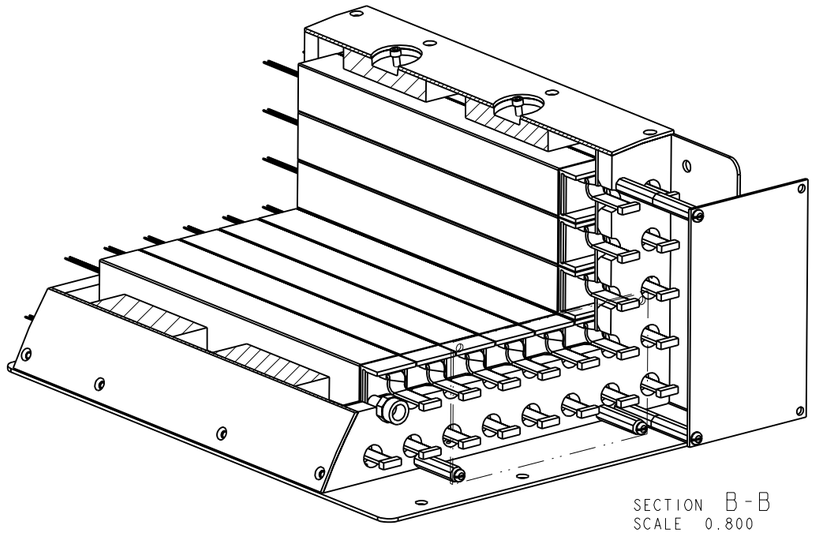

SECTION B-B
SCALE 0.800

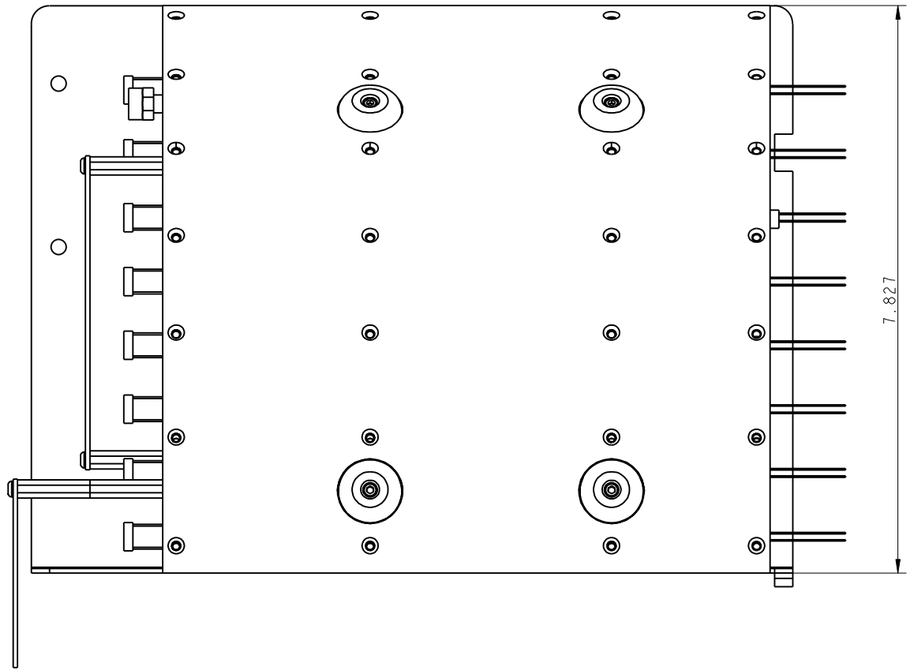

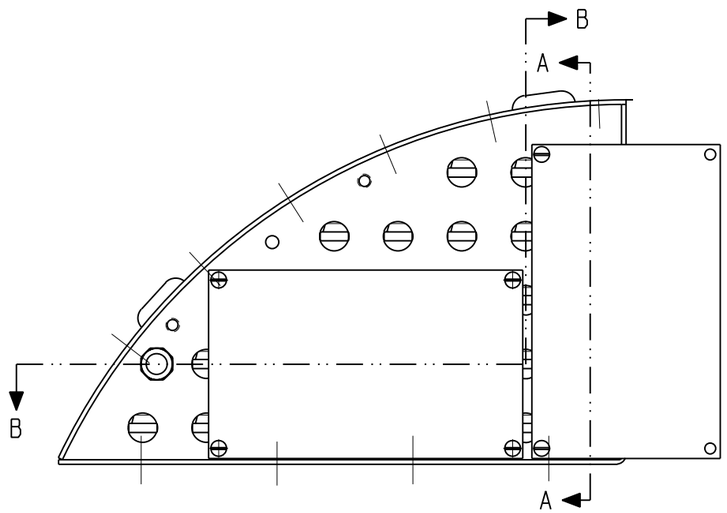

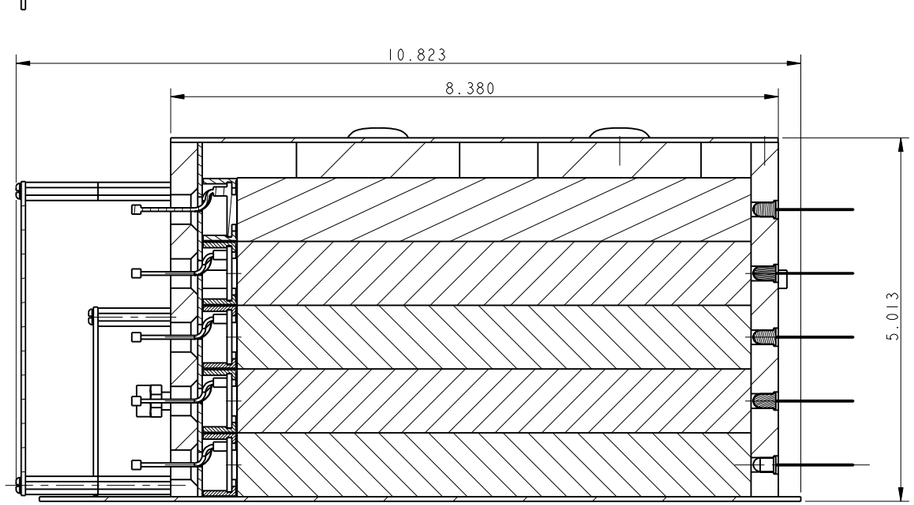

Notes: Unless otherwise specified:

REV			
SHEET			
REVISION STATUS OF SHEETS			

CDD DWG NUMBER

THIRD ANGLE PROJECTION		NEXT ASSEMBLY	
INTERPRET IN GENERAL ACCORDANCE WITH ASME Y14.5M-1994	DRAWN BY	RUGGIERO	04-Oct-05
UNLESS OTHERWISE SPECIFIED: ALL DIMENSIONS ARE IN MILLIMETERS DECIMAL TOLERANCES X.X ±0.1 X.XX ±0.01 X.XXX ±0.001 ANGLES ± 0.5	DESIGN APPROVAL	-	
	CHECKED BY	-	
	ENGINEER APPROVAL	-	
	SUPERVISOR APPROVAL	-	
NA FINISH	Q.A. APPROVAL	-	
NA MAX. NA MIN.	SAFETY ENGINEERING		

BROOKHAVEN NATIONAL LABORATORY
managed by Brookhaven Science Associates for the U.S. Department of Energy
Upton, NY 11973

PROJECT:	PHENIX
SYSTEM:	MPC
MODEL/DRAWING NAME:	TOP-BOTTOM_MODULE_ASSEMBLY
SIZE: D	DRAWING NUMBER: 105-0219-002
REV.: -	
Q.A. CATAGORY: A-3	SCALE: 1.000
WEIGHT: NA	SHEET 2 OF 2

DWG NO 105-0219-002 | SHEET 2 OF 2 | REV -

NAME:RUGGIERO OBJECT:105-0219-002_2 DATE:03-Nov-05 14:57:21

REVISIONS						
REV	ECN NO.	DESCRIPTION	BY	DATE	CKR	APP

MATERIAL: TEFLON

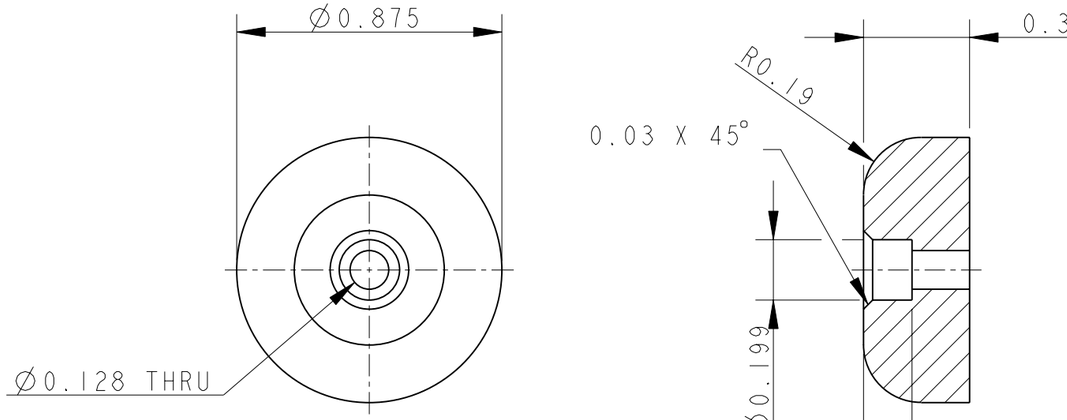

THIRD ANGLE PROJECTION

INTERPRET IN GENERAL ACCORDANCE WITH ASME Y14.5M-1994

UNLESS OTHERWISE SPECIFIED:
ALL DIMENSIONS ARE IN INCHES.
DECIMAL TOLERANCES
X.X ±0.1
X.XX ±0.02
X.XXX ±0.005
ANGLES ± 0.5

FINISH 125 ✓ | BREAK EDGES: .015 MAX. .005 MIN.

NEXT ASSEMBLY

DRAWN BY	RUGGIERO	25-Oct-05
CHECKED BY	-	
COGNIZANT ENGINEER/ SCIENTIST		
Q.A. APPROVAL	-	

BROOKHAVEN NATIONAL LABORATORY
managed by Brookhaven Science Associates
Upton, NY 11973
for the U.S. Department of Energy

PROJECT: PHENIX
SYSTEM: MPC
MODEL/DRAWING NAME: TEFLON_PAD

SIZE: | DRAWING NUMBER: 105-0219-024 | REV. A

Q.A. CATEGORY: A-3 | SCALE: 2.000 | WEIGHT: NA | SHEET: 1/1

NAME:RUGGIERO OBJECT:105-0219-024 DATE:03-Nov-05 15:27:14