NOTES: CONTINUED

). A 0.750-INCH THICK RECTANGULAR STEEL WASHER IS USED ON BOTH SIDES OF THE LUG TO STRADDLE THE LUG HALVES. THE WIDTH OF THE RECTANGULAR WASHERS, I.E. THE DIMENSION THAT STRADDLES THE TWO LUG HALVES SHALL BE SUFFICIENT TO REACH THE OUTSIDE EDGES OF BOTH LUG HALVES. THE HEIGHT OF THE RECTANGULAR WASHERS SHALL BE A MINIMUM OF 5 INCHES. THIS HEIGHT MAY BE REDUCED AS REQUIRED WHERE AN INTERFERENCE OCCURS. LLNL OR BNL SHALL BE NOTIFIED PRIOR TO REDUCTION.

. THE SPHERICAL WASHERS (ITEM 28) ARE STILL REQUIRED

. THE SUPPORT RODS FOR PLANES 1,2,3 AND 4 SHALL BE CONTINUOUS WITH NO ROD COUPLINGS (ITEM 20).

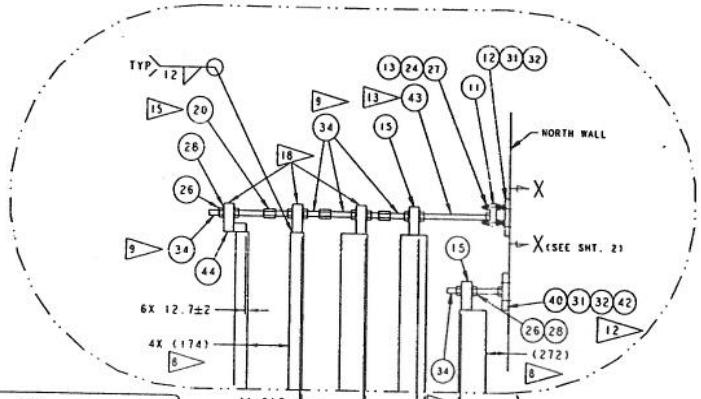

NOTES: CONTINUED

13 CUT ITEM 43 (TUBE) TO LENGTH AND SLIDE OVER ITEM 34 (THREADED ROD).

14 CUT ITEM 29 (ANCHOR ROD) FLUSH WITH ITEM 25 (NUT). MAX HEIGHT 80 MM ABOVE FLOOR PLATE.

15 ITEM 34 (THREADED ROD) MUST BE THREADED INTO ITEM 20 (COUPLING) 38 MM MINIMUM.

16 LLNL MAY SUBSTITUTE PRE-FABRICATED STUD.

17 PLUG LIFTING HOLES WITH LLNL SUPPLIED PLUG. TACK WELD IN PLACE.

18 ROD MOUNTING LUGS FOR PLANES 1, 2 AND 3 MAY BE CUT INTO SYMETRICAL HALVES THEREBY SEPARATING THE TANGS INTO TWO PIECES PROVIDED:

A. THE CUTTING IS PERFORMED BY SAW, NOT TORCH.

B. THE CUTTING OF THE LUG WELDMENTS (ITEM 44) WILL EXPOSE A CRACK BETWEEN THE TWO WELDED PIECES. THAT CRACK SHALL BE WELDED WITH A 13 MM VEE-GROOVE.

C. MAXIMUM SPACING OF THE TWO HALVES WHEN INSTALLED DOES NOT EXCEED 50MM (THE RESULTING GAP BETWEEN THE TANGS OF THE LUG WILL BE 41+50=91MM).

NOTE 18 CONTINUED IN UPPER LEFT CORNER

NOTES
UNLESS OTHERWISE SPECIFIED:

1. ALL DIMENSIONS ARE IN ~~INCHES~~ MM
2. DIMENSIONING AND TOLERANCING PER ANSI Y14.5M-1982.
3. SURFACE TEXTURE PER ANSI B46.1-1985. SURFACE TEXTURE SYMBOLS PER ANSI Y14.36-1978.

2 CHIP OUT EXISTING FLOOR TO PROVIDE SPACE FOR GROUT

3 DRILL HOLES, INSERT ADHESIVE CAPSULE (ITEM 33), CUT THREADED ROD (ITEM 29) TO LENGTH, GRIND 45° CHISEL POINT ON ROD, INSERT AND CURE PER HILTI RECOMENDATIONS.

5 FILL WITH GROUT AND CURE PER MANUFACTURERS INSTRUCTIONS. FULL CONTACT BETWEEN GROUT AND PLATE/FLOOR IS ESSENTIAL TO INSURE LOAD DISTRIBUTION. 3" NPTF HOLES ARE PROVIDED IN FLOORPLATES FOR GROUT INJECTION.

7 DRILL HOLES, INSERT ADHESIVE CAPSULE (ITEM 31), INSERT ANCHOR ROD ASSEMBLY (ITEM 32) AND CURE PER HILTI RECOMENDATIONS.

8 POSITION PLATES PER LLNL INSTALLATION PLAN.

9 CUT THREADED ROD (ITEM 34) TO REQUIRED LENGTH AT ASSEMBLY.

10 CUT THREADED ROD (ITEM 38) TO REQUIRED LENGTH (APPROX. 8") AT ASSEMBLY FOR USE AS JACKING SCREWS TO LEVEL PLATE BEFORE GROUTING. USE TWO NUTS (ITEM 23) TO PROVIDE WRENCH FLATS. CUT OFF FLUSH WITH SURFACE OF PLATE AFTER GROUT HAS CURED.

11 CUT TO LENGTH AS REQUIRED.

12 BACK UP WASHER FROM ITEM 32 WITH SECOND WASHER ITEM 42.

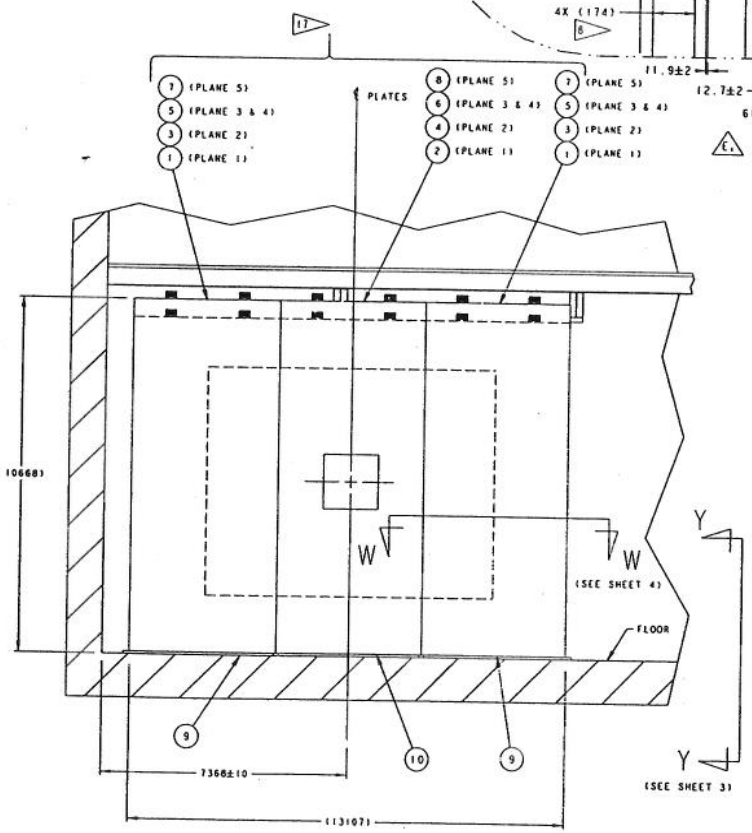

VIEW LOOKING NORTH

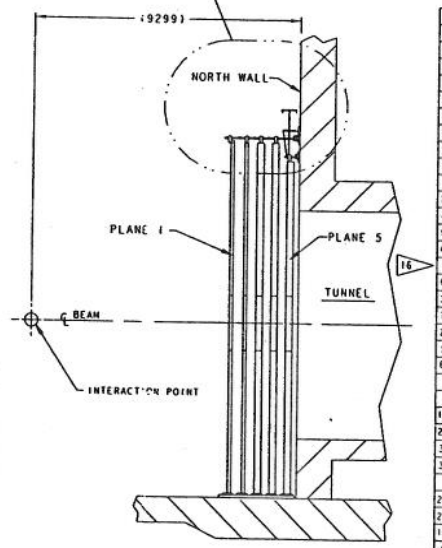

NO REQD		PART / LLNL STK NO	DESCRIPTION / MATERIAL	SPEC NO	ITEM
5		96-101000	LUG WELDMENT, ROD MOUNTING		44
AR			TUBE, 2.00 OD X .219 THK, CARBON STL		43
48		5310-21896	WASHER, CUT STEEL, 1"		42
24		HILTI	ADHESIVE CAPSULE, HEA 1 X 8.25		41
6		95-102573	PLATE NO. 2, ROD MOUNTING, SHORT		40
30		95-102572	BLOCK 2, PLATE POSITIONING		39
6		MC MASTER CARR 98861A160	THREADED ROD, M24X3X1M LONG, STEEL		38
18			WASHER, STL, ZINC/CAD PLT., .94"I.D.X2.25"O.D.X.135 THK.		37
44			SOC HD CAP SCREW, STEEL, BLACK, M12 X 100 LG.	DIN912 8.8	36
18			HEX CAP SCREW, STEEL, GRADE 8, .875-9 X 3.5 LG., ZINC PLT.		35
6		MC MASTER CARR 98957A041	THREADED ROD, 1.50"-6 X 144" LONG, 4140 STL.		34
24		HILTI 709170	ADHESIVE CAPSULE, HEA 1 1/4" X 12"		33
48		HILTI	ANCHOR ROD ASSY., HAS SUPER 1" X 15.5" LONG (12.38 EMBED)		32
96		HILTI	ADHESIVE CAPSULE, HEA 7/8" X 6 5/8" (2 PER HOLE)		31
A/R		UNISORB V-1, OR EQUIV.	GROUT		30
4		MC MASTER CARR 98957A062	THREADED ROD, 1.25"-7 X 144" LONG, 4140 STL.		29
60		MC MASTER CARR 91131A124	WASHER, SPHERICAL, 1.38" NOMINAL ID STL		28
36		MC MASTER CARR 91131A100	WASHER, .875", SPHERICAL, STEEL		27
72		MC MASTER CARR 90521A039	NUT, HEX, 1.50"-6, ALLOY STEEL, GRADE 2H		26
24		MC MASTER CARR 90502A040	NUT, HEX, HEAVY JAM, 1.25"-7, STL		25
54		MC MASTER CARR 90521A140	NUT, HEX, .875"-9, ALLOY STEEL, GRADE 2H		24
60			NUT, HEX, M24X3, STEEL		23
					22
					21
18		94-100919	NUT, ROD COUPLING		20
22		94-101072	BLOCK, PLATE RESTRAINING		19
30		94-101066 TAB-02	ADJUSTMENT SCREW (M30 X 51 LONG)		18
30		94-101066 TAB-01	ADJUSTMENT SCREW (M30 X 102 LONG)		17
					16
25		94-101067	LUG, ROD MOUNTING		15
24		93-104213	WASHER, 110 O.D. X 38 I.D. X 30 THK.		14
18		94-101068 TAB-01	ROD, THREADED (.875"-9 X 210mm LONG)		13
6		94-101070	PLATE NO.2, ROD MOUNTING		12
6		94-101069	PLATE NO.1, ROD MOUNTING		11
1		94-101065	FLOORPLATE, INNER		10
2		94-101061	FLOORPLATE, OUTER		9
1		94-101074 TAB 02	PLATE, MUON I.D., SHORT (200mm THK., W/HOLE)		8
2		94-101074 TAB 01	PLATE, MUON I.D., SHORT (200mm THK.)		7
2		94-101062 TAB 04	PLATE, MUON I.D., STANDARD (200mm THK., W/HOLE)		6
4		94-101062 TAB 03	PLATE, MUON I.D., STANDARD (200mm THK.)		5
1		94-101073	PLATE, MUON I.D., NARROW (100mm THK., W/HOLE)		4
2		94-101076	PLATE, MUON I.D., NOTCHED (100mm THK.)		3
1		94-101062 TAB 02	PLATE, MUON I.D., STANDARD (100mm THK., W/HOLE)		2
2		94-101062 TAB 01	PLATE, MUON I.D., STANDARD (100mm THK.)		1

LTR	DWN	CHK	APVD	DATE	ZONE	CHANGE
E2	RHK	ML	ML	6/13/96	-	ADDED NOTE 18
E1	RHK	ML	ML	6/13/96	-	ADDED LUG LOC. DIMS.
D2	PD	ML	ML	2-96	-	ADDED ITEM 44
D1	PD	ML	ML	2-96	-	ADDED NOTES 16, 17
C3	PD	ML	ML	11-95	-	CHANGED ITEMS 25 AND 28
C2	PD	ML	ML	11-95	-	ADDED ITEM 43
C1	PD	ML	ML	11-95	-	ADDED NOTES 13, 14, 15
B2	PD	ML	ML	10-95	-	ADDED ITEM 42
B1	PD	ML	ML	10-95	-	DELETED ITEM 16
A	PD	ML	ML	8-95	-	GENERAL REVISIONS

DWN R.HOLMES 3/95
CHK M. LIBERMAN 5/95
APVD M. LIBERMAN 5/95
QUALIFIED BY:
TITLE DATE

LAWRENCE LIVERMORE NATIONAL LABORATORY
MECHANICAL ENGINEERING DEPT
UNIVERSITY OF CALIFORNIA

CLASSIFICATION

THIS DOCUMENT IS THE PROPERTY OF THE UNIVERSITY OF CALIFORNIA LAWRENCE LIVERMORE LABORATORY. PRODUCTION PROHIBITED WITHOUT PERMISSION OF THE MECHANICAL ENGINEERING DEPARTMENT.

MAJOR UNIT: RELATIVISTIC HEAVY ION COLLIDER (RHIC)
SUBASSY: PHENIX MUON PISTON MAGNET
DETAIL: MUON I.D. INSTALLATION ASSEMBLY
DRAWN BY AAA
DRAWING NO: AAA94-101060-0E
SCALE NO—NONE—OF SHEET 1 OF 4

RECEIVED 6/14/96

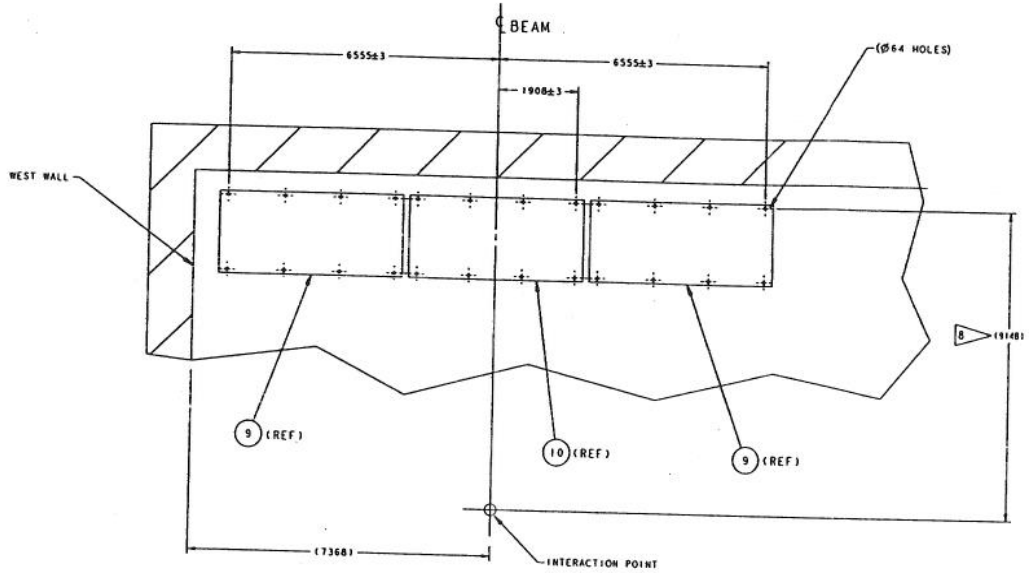

FLOORPLATE LOCATIONS
(PLAN VIEW)

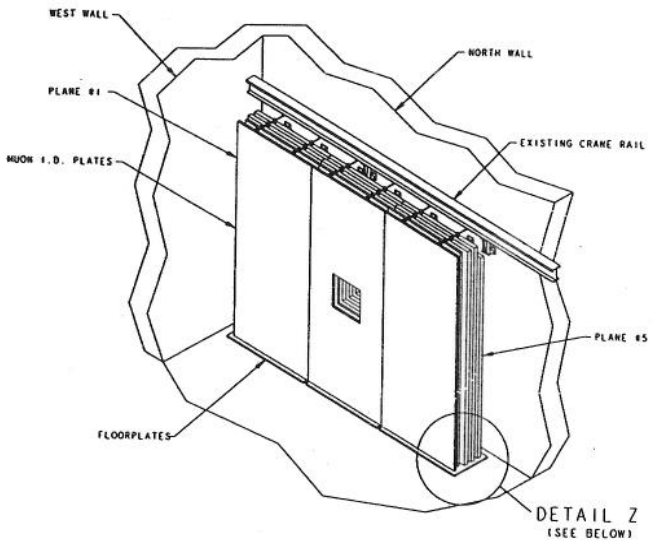

ISOMETRIC VIEW FOR CLARITY

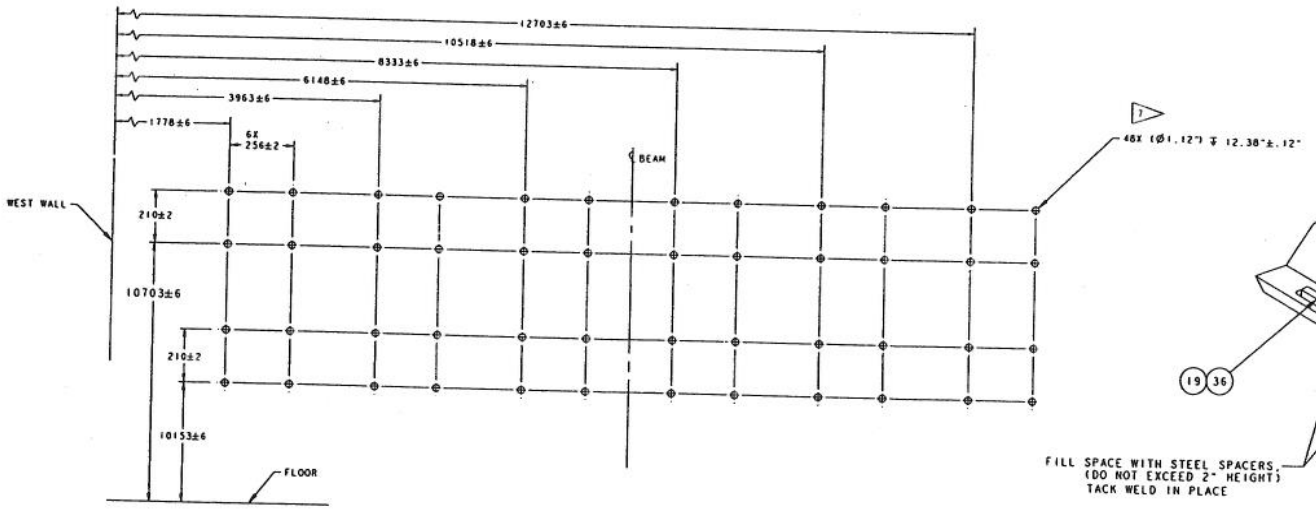

VIEW X-X
(FROM SHEET 1, ZONE G2)

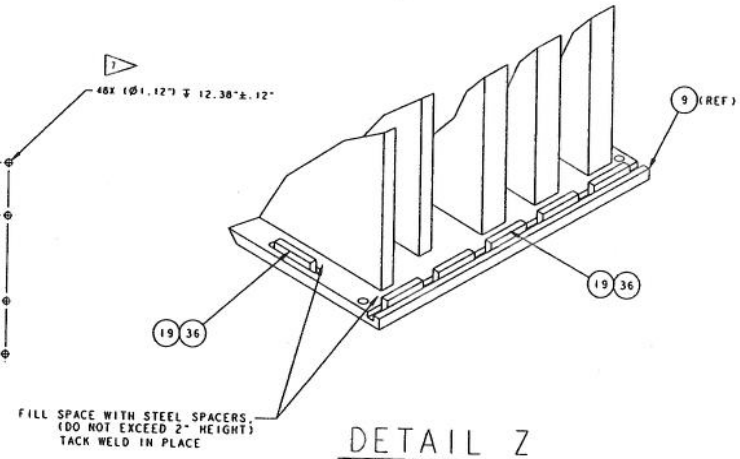

DETAIL Z
(FROM ABOVE)

CLASSIFICATION	UNCLASSIFIED
DRAWING NO	AAA94-101060-0E
SCALE — NONE —	SHEET 2 OF 4

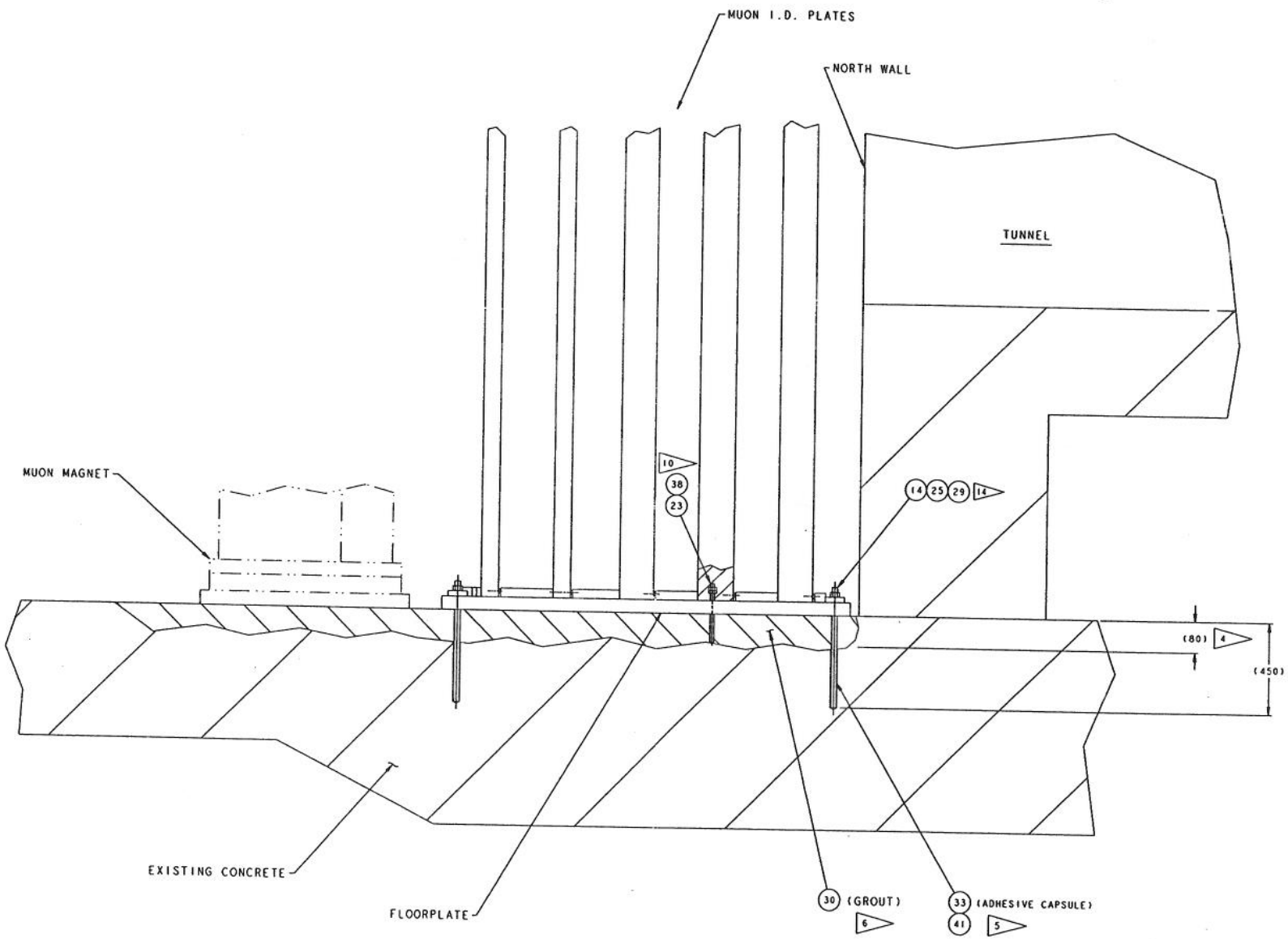

VIEW Y-Y

(FROM SHEET 1, ZONE D6)

CLASSIFICATION
UNCLASSIFIED

DRAWING NO
AAA94-101

SCALE NONE

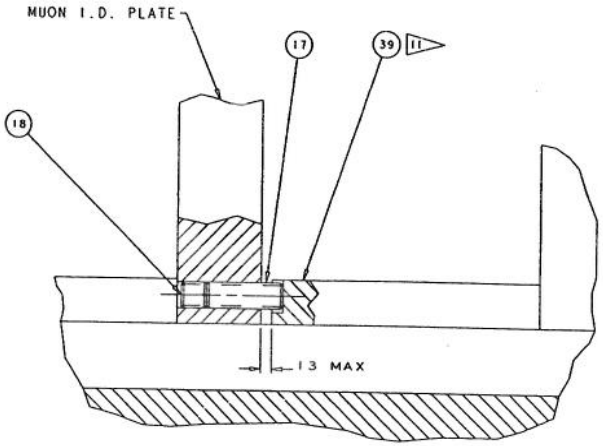

VIEW V-V

ROTATED 90° CCW
(FROM BELOW)

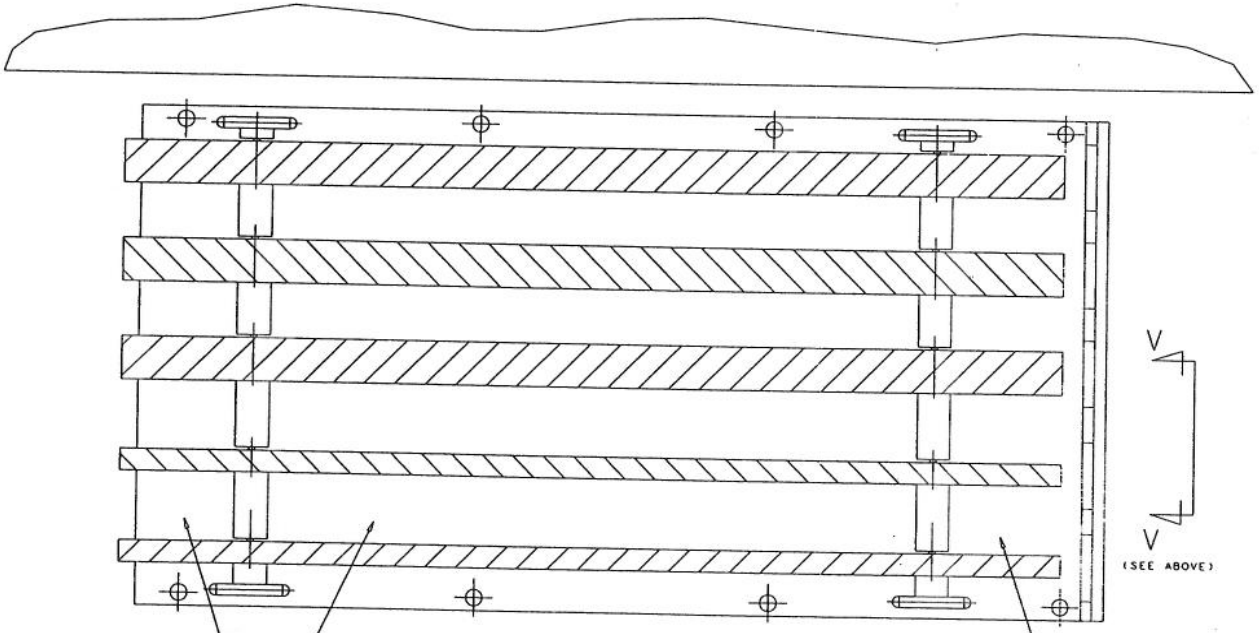

SECTION W-W

(FROM SHEET 1, ZONE C6)

CLASSIFICATION	UNCLASSAFIED
DRAWING NO	AAA94-101060-0E
SCALE — NONE —	SHEET 4 OF 4

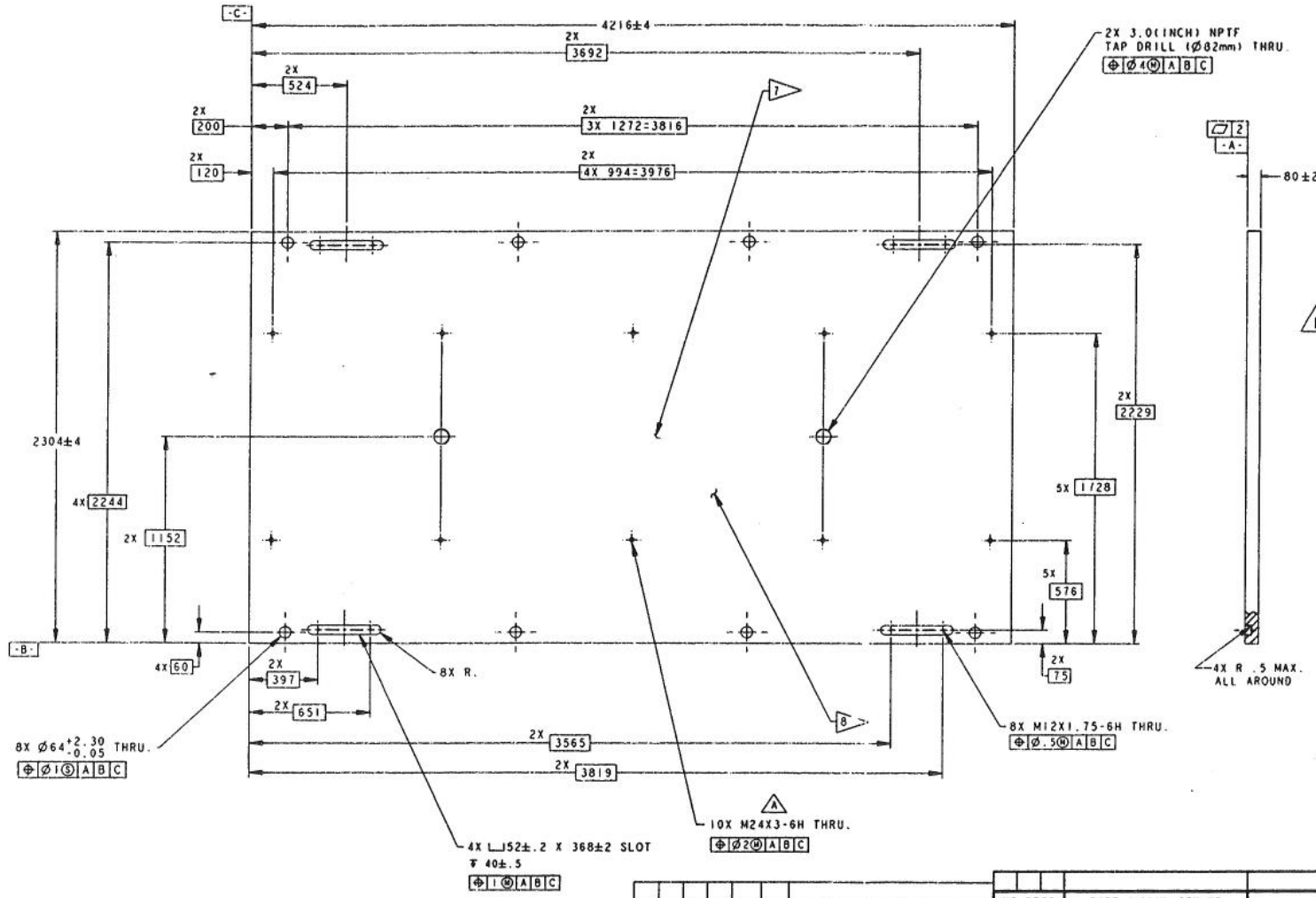

NOTES
UNLESS OTHERWISE SPECIFIED:

1. ALL DIMENSIONS ARE IN ~~INCHES~~ MM
2. DIMENSIONING AND TOLERANCING PER ANSI Y14.5M-1982.
3. SURFACE TEXTURE PER ANSI B46.1-1985. SURFACE TEXTURE SYMBOLS PER ANSI Y14.36-1978.
4. 6.5 ALL MACHINED SURFACES.
5. BREAK SHARP EDGES, CHAM. OR R 1 TO 2MM
6. SAND BLAST AND PAINT WITH A ZINC CHROMATE PRIMER, KELLY-MOORE NO. 1710, OR EQUIVALENT. ALL TAPPED HOLES SHALL BE PROTECTED DURING SAND BLASTING AND PAINTING. ALL SAND SHALL BE REMOVED BEFORE PAINTING.

7 STENCIL THE WORDS "THIS SIDE UP" WITH 50mm CHARACTERS, IN WHITE PAINT, APPROXIMATELY WHERE INDICATED.

8 STENCIL DRAWING NUMBER AND REVISION LETTER WITH 50mm CHARACTERS, IN WHITE PAINT, APROXIMATELY WHERE INDICATED.

E 9. ALL TAPPED HOLES SHALL BE PROTECTED FROM DAMAGE AND CORROSION DURING SHIPMENT.

LTR	DWN	CHK	APVD	DATE	CONC	CHANGE
E	VW	ML	ML	3/95	C2	NOTE 4 WAS 3.2, ADDED NOTE 9
D	VW	ML	ML	1/95		NO CHANGES
C	RHH	ML	ML	11/22/94		REVISED
B	RHH	ML	ML	6/10/94		WAS 1942 WIDE & HOLES REVISED
A	RHH	ML	ML	4/7/94	58	10 M24 HOLES ADDED

NO REQD	PART / LLNL STK NO	DESCRIPTION / MATERIAL	SPEC NO	ITEM
		STEEL	ASTM A36	

DWN R. HOLMES 3/22/94
CHK M. LIBKIND 10/28/94
APVD M. LIBKIND 10/28/94
CLASSIFIED BY:
TITLE DATE

LAWRENCE LIVERMORE NATIONAL LABORATORY
MECHANICAL ENGINEERING DEPT
UNIVERSITY OF CALIFORNIA

CLASSIFICATION
UNCLASSIFIED
THIS DOCUMENT IS THE PROPERTY OF THE UNIVERSITY OF CALIFORNIA LAWRENCE LIVERMORE LABORATORY. PRODUCTION PROHIBITED WITHOUT PERMISSION OF THE MECHANICAL ENGINEERING DEPARTMENT.

MAJOR UNIT: RELATIVISTIC HEAVY ION COLLIDER (RHIC)
( ) TITLES CLASSIFICATION
SUBASSY: PHENIX MUON PISTON MAGNET
DETAIL: FLOORPLATE, INNER, MUON I.D.
SHOWN ON AAA: 94-101060
ACCT NO
DRAWING NO: AAA94-101065-0E
SCALE — NONE — SHEET 1 OF 1

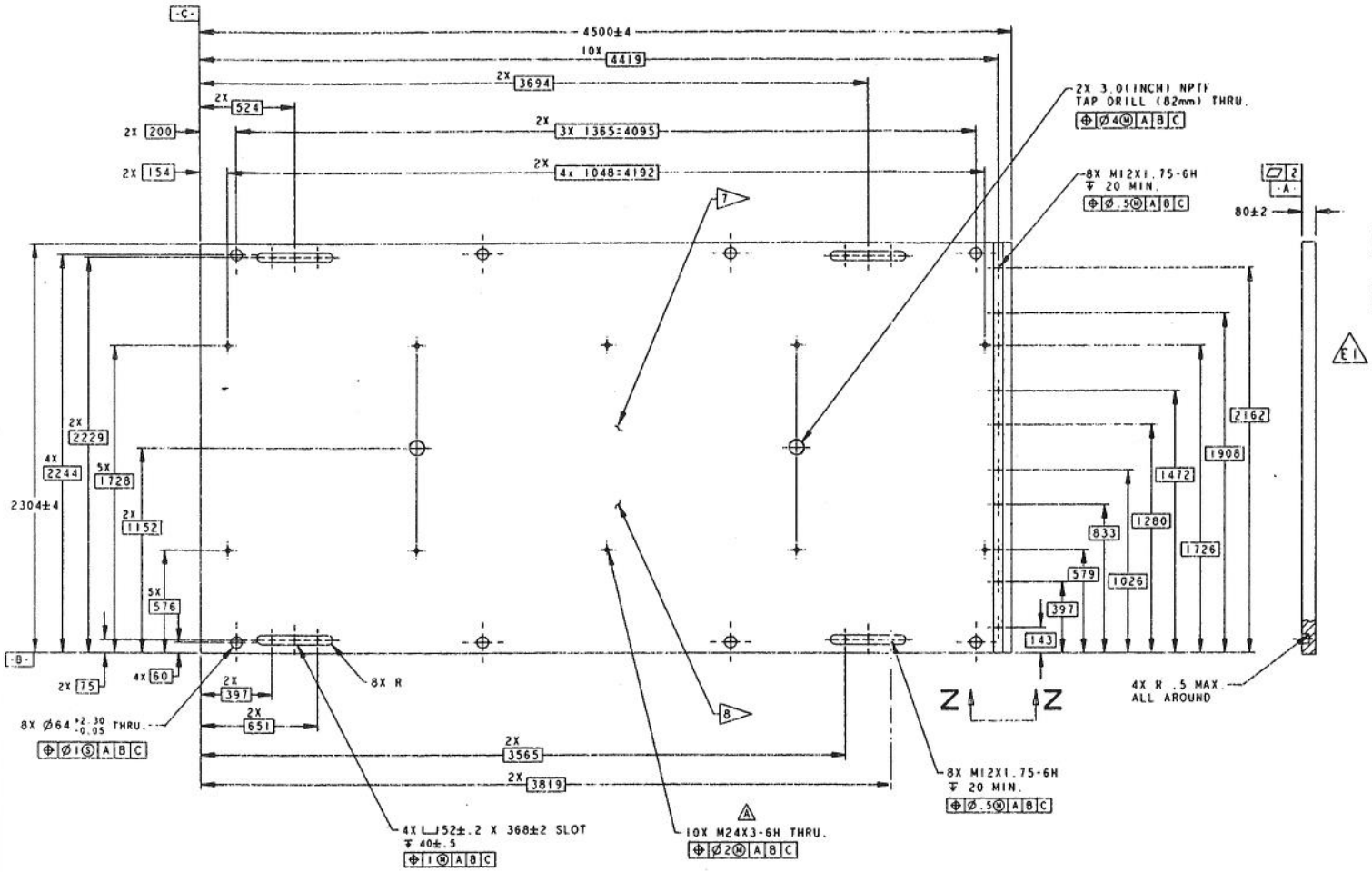

NOTES
UNLESS OTHERWISE SPECIFIED.

1. ALL DIMENSIONS ARE IN ~~INCHES.~~ MM
2. DIMENSIONING AND TOLERANCING PER ANSI Y14.5M-1982.
3. SURFACE TEXTURE PER ANSI B46.1-1985. SURFACE TEXTURE SYMBOLS PER ANSI Y14.36-1978.
4. 6.3 ALL MACHINED SURFACES.
5. BREAK SHARP EDGES, CHAM. OR R 1 TO 2MM
6. SAND BLAST AND PAINT WITH A ZINC CHROMATE PRIMER, KELLEY-MOORE NO. 1710 OR EQUIVALENT. ALL TAPPED HOLES SHALL BE PROTECTED DURING SAND BLASTING AND PAINTING. ALL SAND SHALL BE REMOVED BEFORE PAINTING.
7. STENCIL THE WORDS "THIS SIDE UP" WITH 50mm CHARACTERS, IN WHITE PAINT, APPROXIMATELY WHERE INDICATED.
8. STENCIL DRAWING NUMBER AND REVISION LETTER WITH 50mm CHARACTERS, IN WHITE PAINT, APROXIMATELY WHERE INDICATED.
9. ALL TAPPED HOLES SHALL BE PROTECTED FROM DAMAGE AND CORROSION DURING SHIPMENT. (E1)

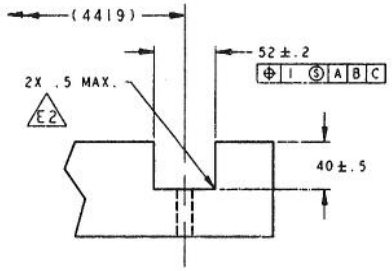

VIEW Z-Z

LTR	DWN	CHK	APVD	DATE	ZONE	CHANGE
E2	VW	ML	ML	3/95	B2	.5 WAS .4
E1	VW	ML	ML	3/95	C3	NOTE 4 WAS 3.2, ADDED NOTE 9
D	VW	ML	ML	1/95		NO CHANGE
C	RHH	ML	ML	9/22/94		REVISED
B	RHH	ML	ML	6/13/94		WAS 1942 X 4496 & HOLES REVISED
A	RHH	ML	ML	4/7/94	B6	10 M24 HOLES ADDED

NO REQD	PART / LLNL STK NO	DESCRIPTION / MATERIAL	SPEC NO	ITEM
		STEEL	ASTM A36	

DWN R. HOLMES	3/22/94	
CHK M. LIBKIND	10/28/94	
APVD M. LIBKIND	10/28/94	
CLASSIFIED BY:		
TITLE	DATE	

LAWRENCE LIVERMORE NATIONAL LABORATORY
MECHANICAL ENGINEERING DEPT
UNIVERSITY OF CALIFORNIA

CLASSIFICATION
~~UNCLASSIFIED~~
THIS DOCUMENT IS THE PROPERTY OF THE UNIVERSITY OF CALIFORNIA LAWRENCE LIVERMORE LABORATORY. PRODUCTION PROHIBITED WITHOUT PERMISSION OF THE MECHANICAL ENGINEERING DEPARTMENT.

MAJOR UNIT: RELATIVISTIC HEAVY ION COLLIDER (RHIC)
( ) TITLES CLASSIFICATION
SUBASSY: PHENIX MUON PISTON MAGNET
DETAIL: FLOORPLATE, OUTER, MUON I.D.
SHOWN ON AAA 94-101060
ACCT NO
DRAWING NO: AAA94-101061-0E
SCALE — NONE
SHEET 1 OF 1