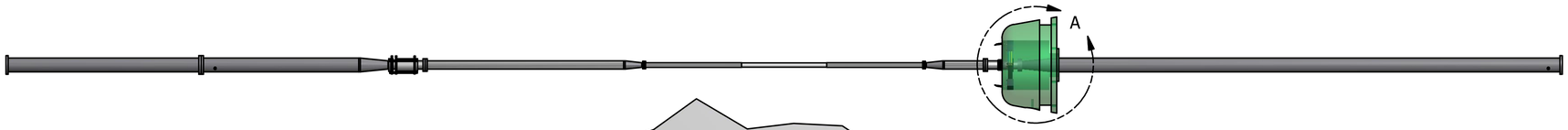

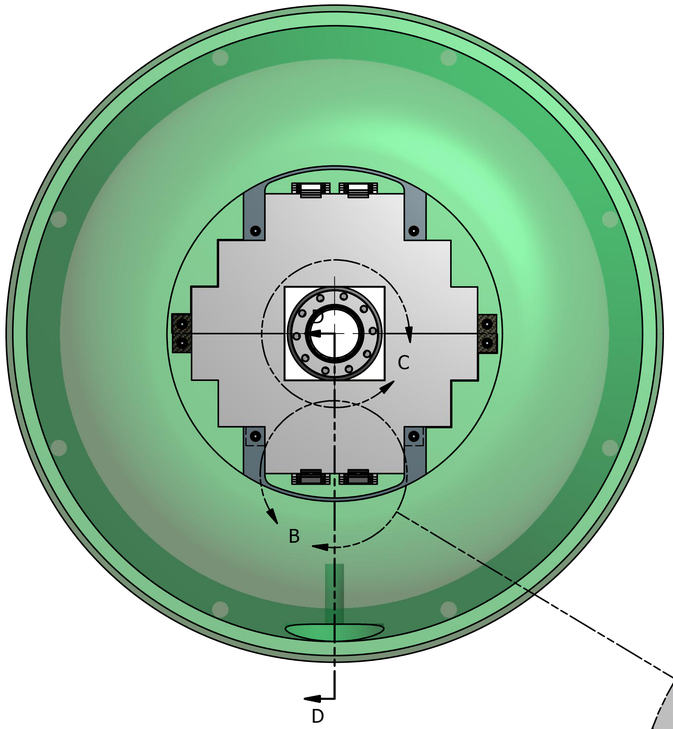

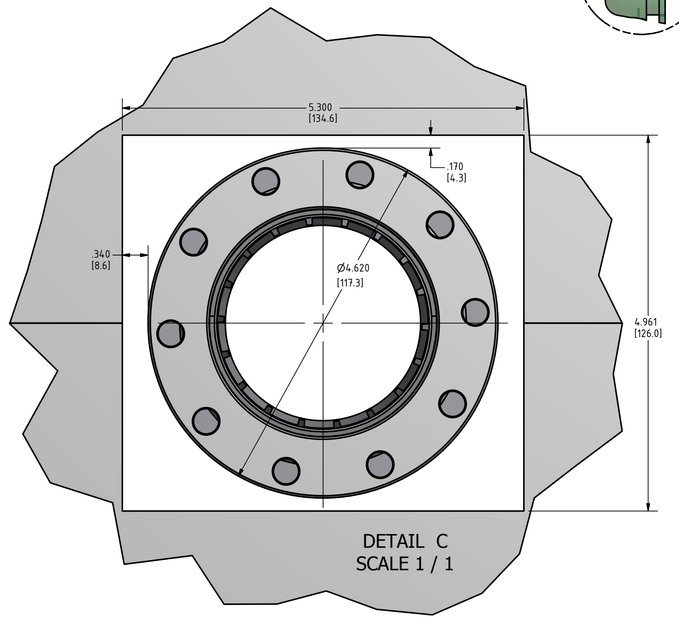

DETAIL C
SCALE 1 / 1

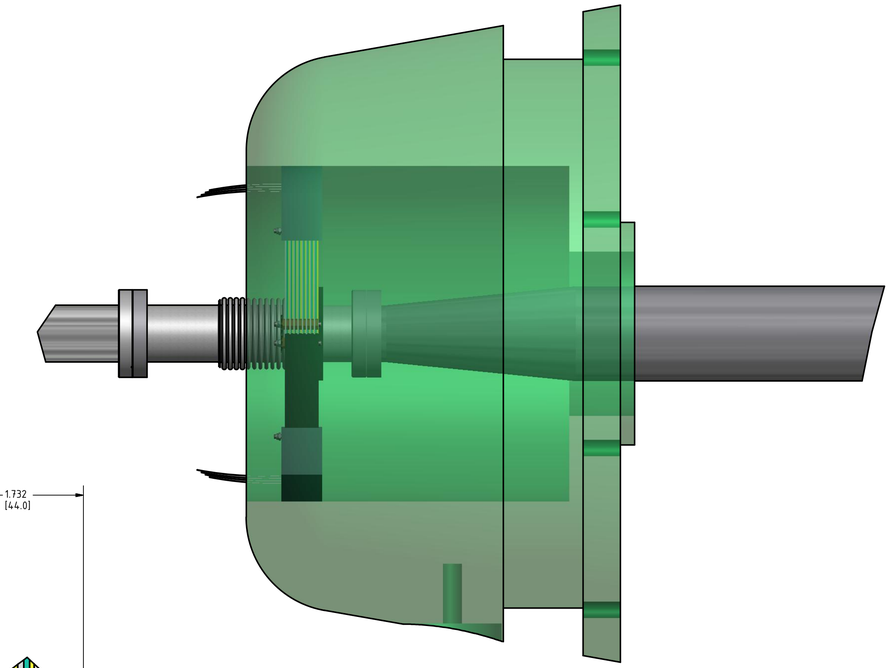

DETAIL A
SCALE 1 / 4

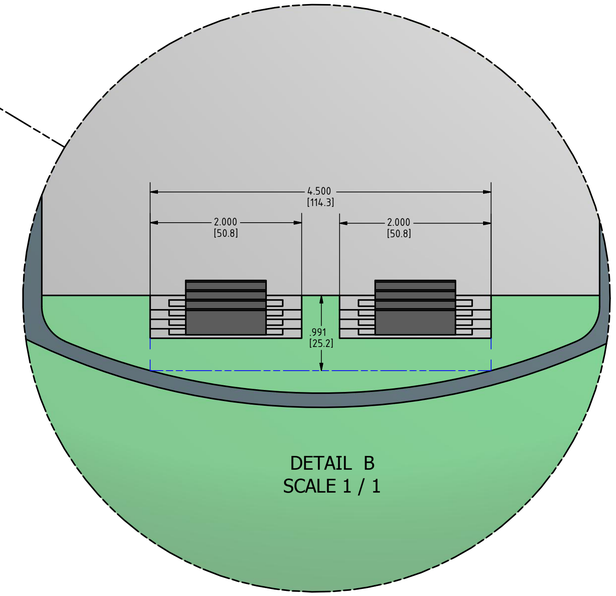

DETAIL B
SCALE 1 / 1

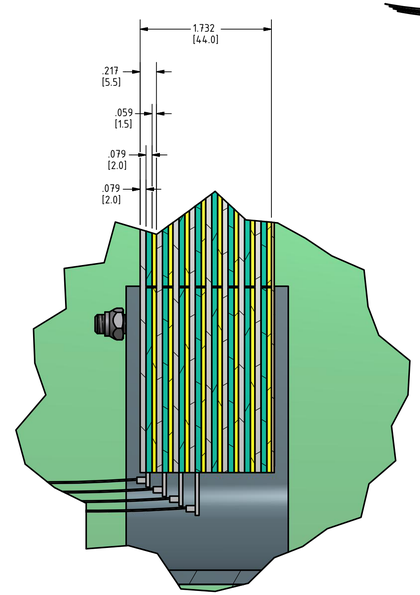

DETAIL E
SCALE 1 /1

PRELIMINARY
NOT FOR FABRICATION

DRAWN rick	11/8/2012		
CHECKED		TITLE	
QA			
MFG			
APPROVED		SIZE D	DWG NO Installation Assembly 2 — REV
		SCALE	SHEET 1 OF 1