Gas Pad Drawing No.

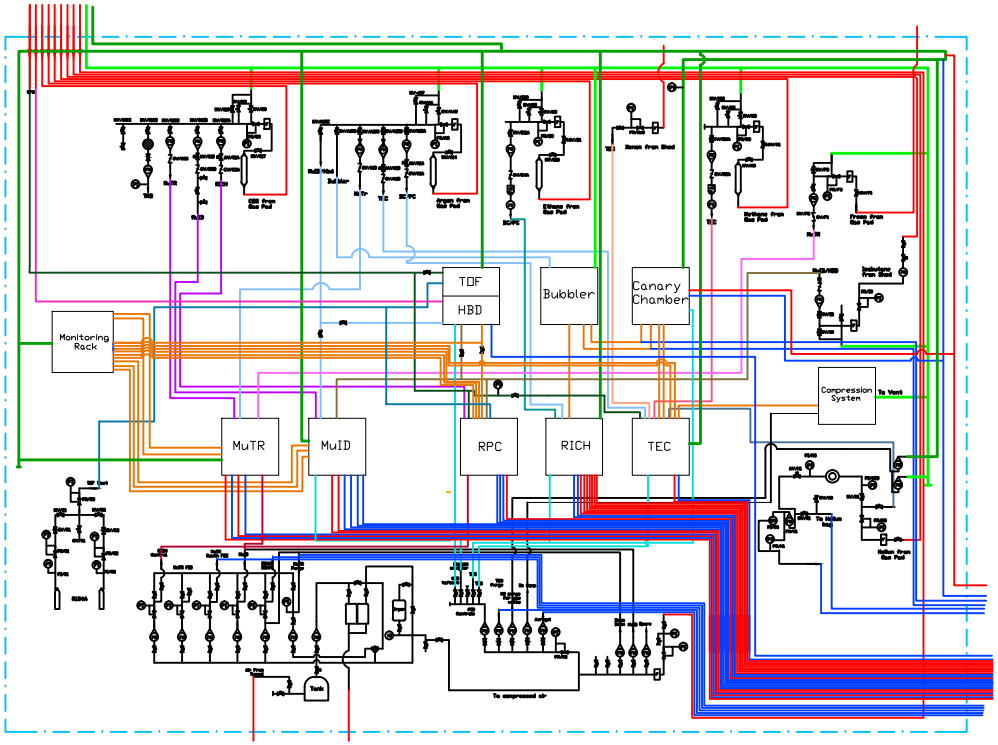

IR Experimental Area

Symbol	Name	Label
	Globe Valve	GV-00
	Relief Valve	RV-00
	Manual Valve	MV-00
	Solenoid Valve	
	3-Way Valve	3MV-00
PI	Pressure Indicator	PI-00
F	Filter	
PI	Pressure Regulator	PR-00
FM	Flow Meter	
FA	Flame Arrester	FA-00
	Check Valve	CV-00
HI	Humidity Indicator	
DPI	Differential Pressure Indicator	
PS	Pressure Switch	

Line	Name
	Supply Line
	Return Line
	Vent Low Pressure
	Vent High Pressure
	CO2
	Argon
	Xenon
	Methane
	Ethane
	Freon
	Freon High Pur(Up)
	Helium
	SF6
	Nitrogen
	Compressed Air
	Isobutane
	R134a
	Mixed Gas
	Bitrogen Backup

Sub-Systems	Title/Descriptions
RPC	
RICH	
TOF	
Bubbler	
Canary Chamber	
TEC	
MuTR	
MuID	