Symbol	Name	Label
	Globe Valve	GV-##
	Relief Valve	RV-##
	Manual Valve	MV-##
	3-Way Valve	3MV-##
PI	Pressure Indicator	PI-##
PSL	Pressure Switch Low	PSL-##
PI	Pressure Regulator	PR-##
PI PI	Automatic Switchover Pressure Regulator	PRS-##
FA	Flame Arrestor	FA-##
	Check Valve	CV-##

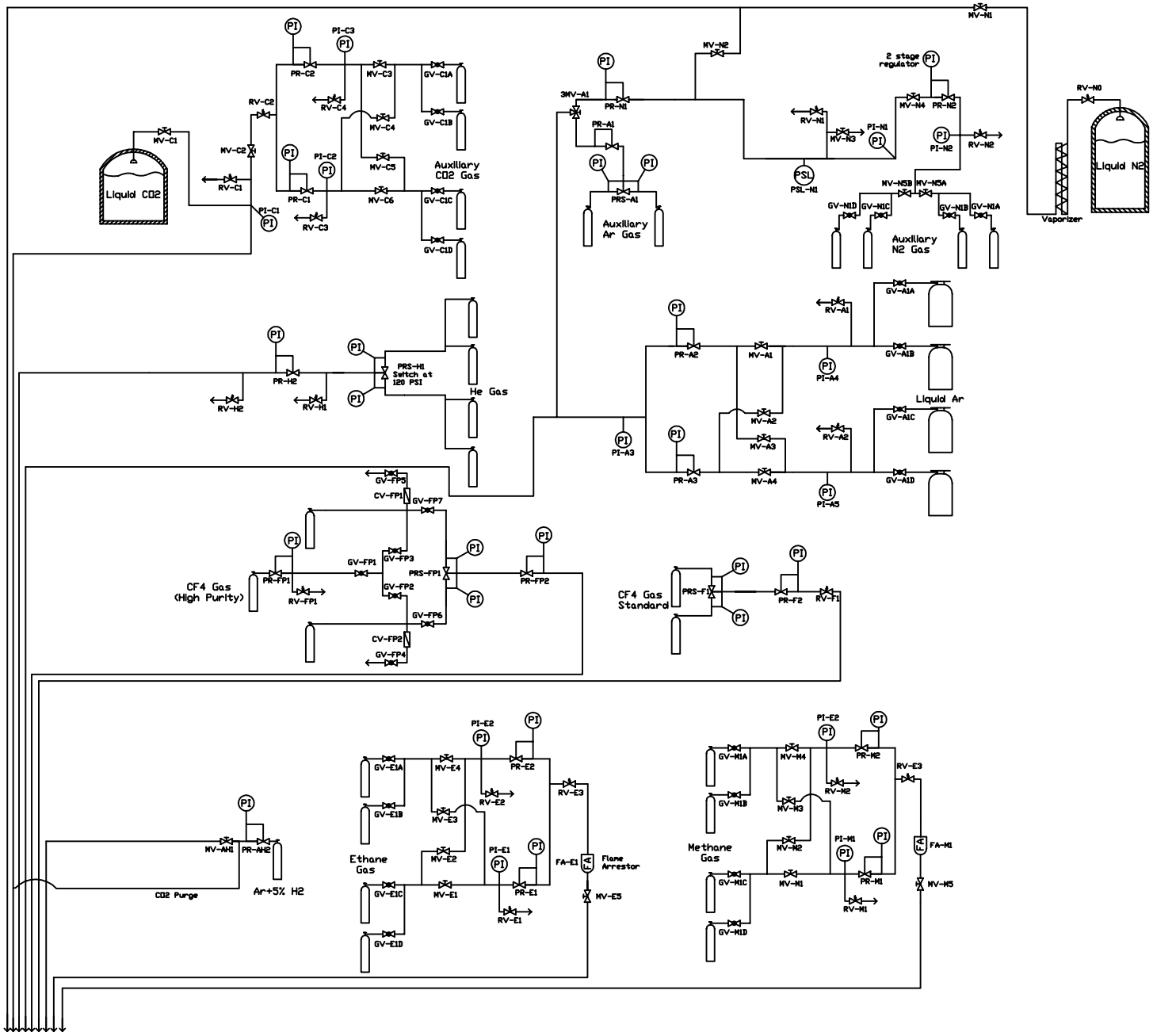

To the Mixing House