REVISIONS							
REV	ZONE	ECN NO.	DESCRIPTION	BY	DATE	CKR	APP
A			INITIAL RELEASE	L.M.			

NOTES:

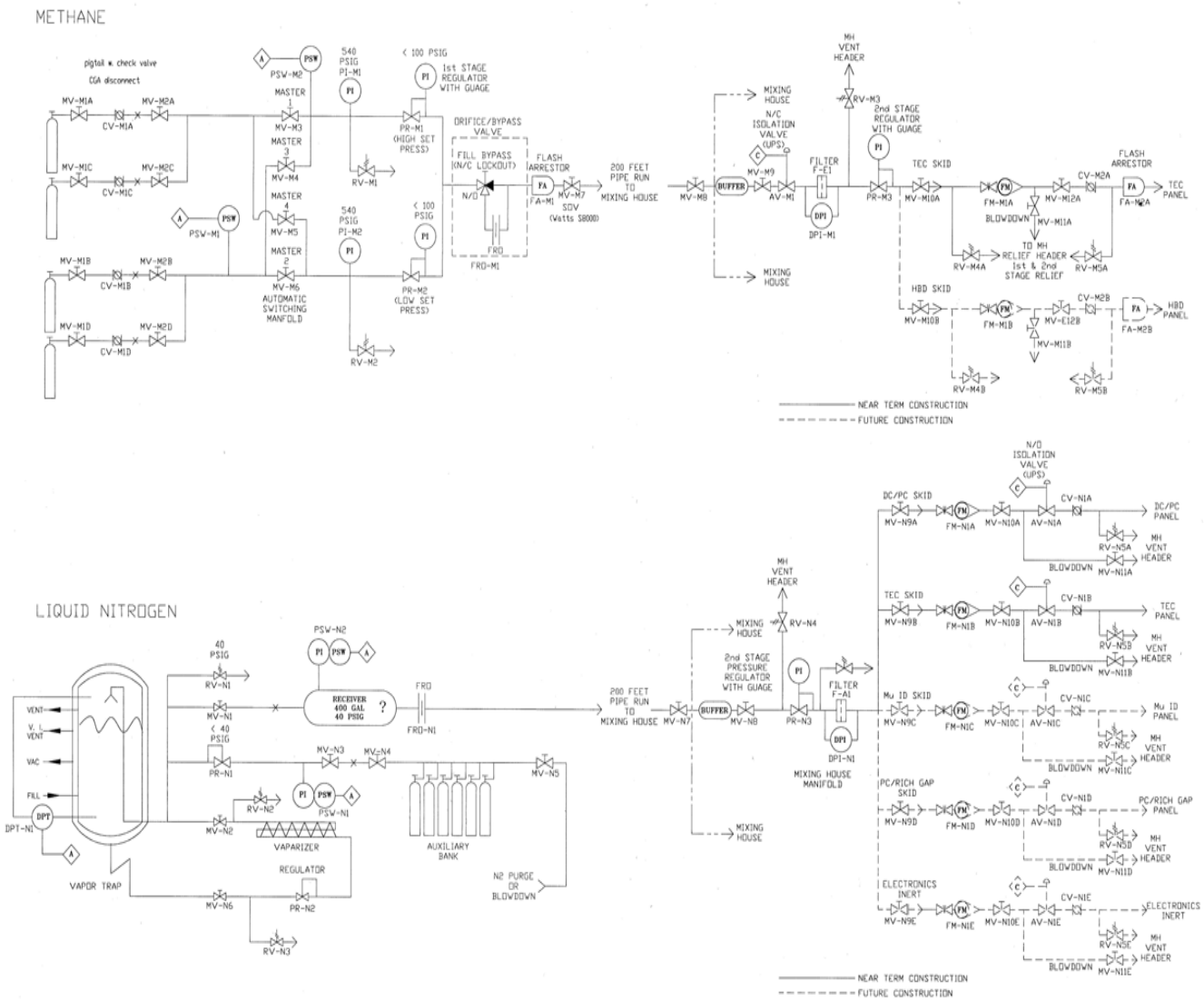

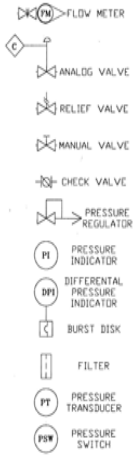

FOR REFERENCE ONLY
MUST BE FIELD VERIFIED

USED ON DRAWING NO.	QTY. PER ASS'Y.	OUTSTANDING ECN
APPLICATION		

INTERPRET IN GENERAL ACCORDANCE WITH ASME Y14.24M-1989

UNLESS OTHERWISE SPECIFIED

DIMENSIONS ARE IN INCHES
DECIMAL TOLERANCES
NA
NA
NA
ANGULAR TOLERANCE ± NA

FINISH NA

BREAK SHARP EDGES MAX NA MIN NA

RHIC

DRAWN BY	L.K. Malm	01/24/00
DESIGN APPROVAL		
CHECKED BY		
ENGINEER APPROVAL		
SUPERVISOR APPROVAL		
Q.A. APPROVAL		

COLLIDER-ACCELERATOR DEPARTMENT
BROOKHAVEN NATIONAL LABORATORY
UPTON, N.Y. 11973

TITLE: PHENIX CRYOGENIC & COMPESSED PURE GAS STORAGE AND SUPPLY P & ID

SIZE D | DRAWING NUMBER: RD105-0508-050 | REV. A

Q.A. CATEGORY A-3 | SCALE: 1/2 | WEIGHT: — | SHEET 2 OF 2

DWG NO RD105-0508-050 SHET 2 OF 2 REV A

NOTES:

REVISIONS							
REV	ZONE	ECN NO.	DESCRIPTION	BY	DATE	CKR	APP
A			INITIAL RELEASE	K.M.			

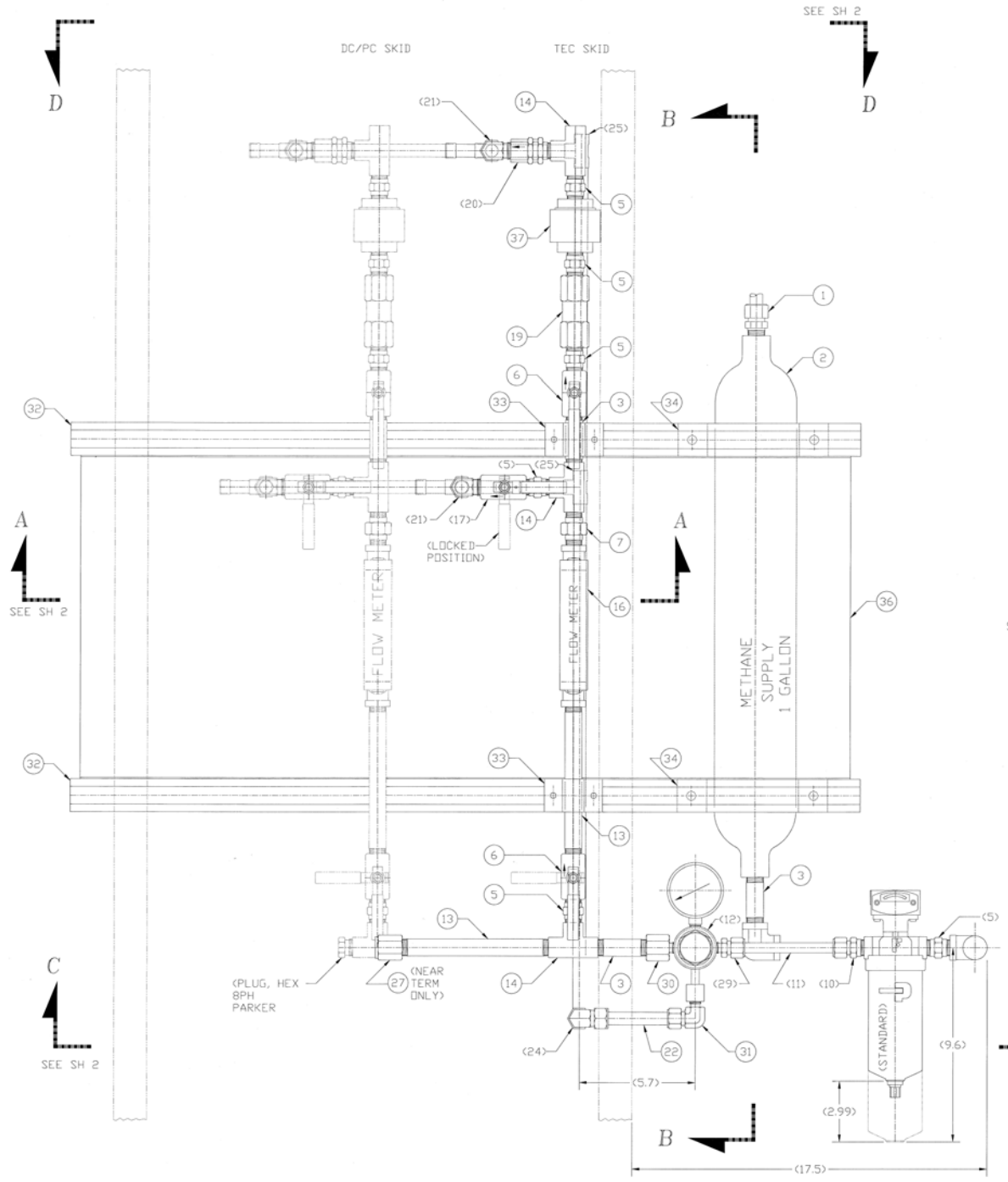

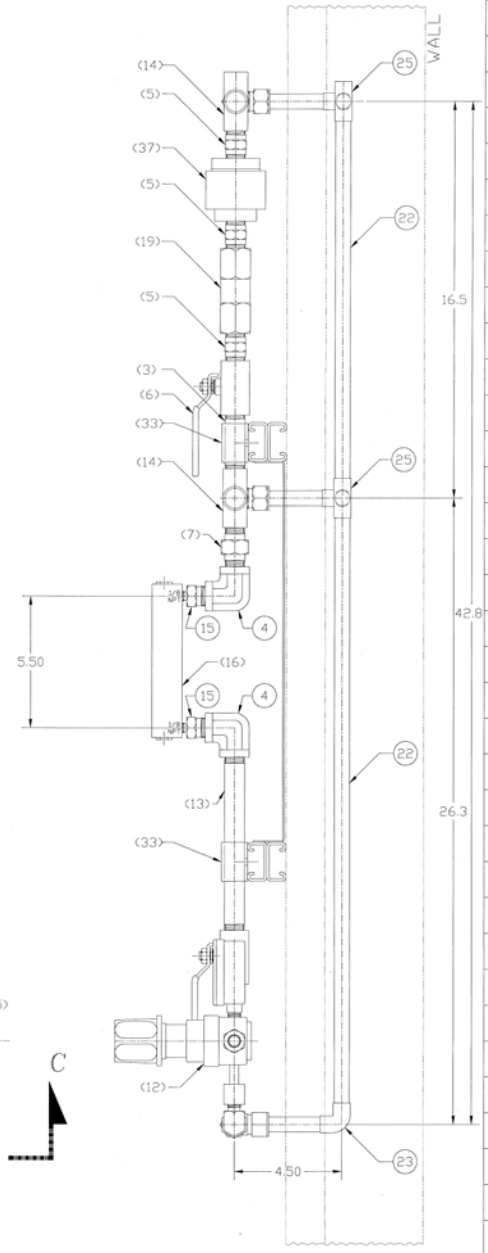

FOR REFERENCE ONLY
MUST BE FIELD VERIFIED

ITEM NO.	QTY.	DESCRIPTION	MATL. DWG. NO. OR BNL NO.
37	1	FLAME CHECK .50FNPT	FLAIR FA70-C
36	1	PANEL	
35	4	"U" SHAPE FITTING FOR P4101 CHANNEL	UNISTRUT P2558-35
34	2	PIPE CLAMP FOR 3.50 (4.00 OD) PIPE	UNISTRUT P2558-35
33	2	PIPE CLAMP FOR .50 (.840 OD) PIPE	UNISTRUT P2558-05
32	2	CHANNEL 1.625 X 1.625 X 39.0 LG	UNISTRUT P4101
31	1	MALE ELBOW CONNECTOR .63 COMPR X .25 MNPT	PARKER 10MSEL4N-B
30	1	REDUCER, ADAPTER .50 FNPT X .25 MNPT	PARKER 8-4RA-B
29	1	MALE STRAIGHT CONNECTOR .50 COMPR X .25 MNPT	PARKER 8MSC4N-B
28	1	MALE HEX NIPPLE (REDUCER) .50 MNPT X .25 MNPT	PARKER 8-4-MHN-B
27	1	CAP, PIPE .50 FNPT	PARKER CP-8
26	2	CAP, TUBING .50 (FOR 0.63 OD TUBING)	MUELLER WB07007
25	4	TEE .50 X .50 X .50 (FOR 0.63 OD TUBING)	MUELLER WB04006
24	1	ELBOW, UNION .63 COMPR X .63 COMPR	PARKER 10EE10-B
23	1	ELBOW, 90° (SHORT) .50 X .50 (FOR 0.63 OD TUBING)	MUELLER WB01622
22	20'	TUBING, COPPER .50 NOM "K" TYPE .63 OD (X 240.00 LG)	
21	2	MALE ELBOW CONNECTOR .63 COMPR X .50 MNPT	PARKER 10MSEL8N-B
20	1	VALVE, RELIEF .50 MNPT (INLET) X .50 FNPT (OUTLET	GENERANT VRVI -500B-V-60
19	1	VALVE, CHECK .50 FNPT	PARKER 8F68L1-B
18	1	VALVE, SOLENOID (N/C) .50 FNPT	ASCO 8210G94
17	1	VALVE, BALL (LOCKING) .50 FNPT	WATTS B-6400-5-LL
16	1	FLOWMETER .125 FNPT	DWYER VFB-65-BV
15	2	MALE HEX NIPPLE (REDUCER) .50 MNPT X .125 MNPT	PARKER 8-2-MHN-B
14	3	TEE .50 FNPT X .50 FNPT X .50 FNPT	PARKER 8-8-8-FT-B
13	2	NIPPLE, LONG .50 X 8.00 LG	McMASTER-CARR 4568K184
12	1	REGULATOR (HI-FLOW LINE) .25 FNPT X .25 FNPT	CONCOA 405-2002-000
11	8'	TUBING, ANNEALED .50 OD (X 8.00 LG)	BNL I-147XX
10	1	MALE STRAIGHT CONNECTOR .50 COMPR X .50 MNPT	PARKER 8MSC8N-B
9	1	FILTER, ELEMENT	PARKER 2CG
8	1	FILTER, HOUSING .50 FNPT	PARKER HN2S-2CG
7	2	NIPPLE, UNION .50 MNPT	MANASTRIP 3000-500
6	3	VALVE, BALL .50 FNPT	WATTS B-6000-5-UL
5	9	MALE HEX NIPPLE .50 MNPT	PARKER 8-8MHN-B
4	5	ELBOW, FEMALE .50 FNPT	PARKER 8-8-FE-B
3	3	NIPPLE, LONG .50 X 3.00 LG	McMASTER-CARR 4568K175
2	1	SAMPLE CYL	PARKER 8FSC1GS-SS
1	1	MALE STRAIGHT CONNECTOR .63 COMPR X .50 MNPT	PARKER 10MSC8N-B

USED ON DRAWING NO. | QTY. PER ASS'Y. | OUTSTANDING ECN | APPLICATION

INTERPRET IN GENERAL ACCORDANCE WITH ASME Y14.24M-1989

UNLESS OTHERWISE SPECIFIED

DIMENSIONS ARE IN INCHES
DECIMAL TOLERANCES
.X ± .06
.XX ± .02
.XXX N/A
ANGULAR TOLERANCE ± 1°

FINISH N/A | BREAK SHARP EDGES MAX N/A MIN N/A

RHIC

DRAWN BY	K.K. Mahn	04/16/99
DESIGN APPROVAL CHECKED BY		
ENGINEER APPROVAL SUPERVISOR APPROVAL		
ARTISTIC APPROVAL		

COLLIDER-ACCELERATOR DEPARTMENT
BROOKHAVEN NATIONAL LABORATORY
UPTON, N.Y. 11973

TITLE: PHENIX
MIXING HOUSE–SUPPLY SYSTEMS
MANIFOLD, SUPPLY METHANE

SIZE E | DRAWING NUMBER: RD105–0508–200 | REV. A

Q.A. CATEGORY A–3 | SCALE: — | WEIGHT: — | SHEET 1 OF 2

DWG. NO. RD105–0508–200 | SHT. 1 OF 2 | REV. A

NOTES:

REVISIONS							
REV	ZONE	ECN NO.	DESCRIPTION	BY	DATE	CKR	APP
A			INITIAL RELEASE	K.M.			

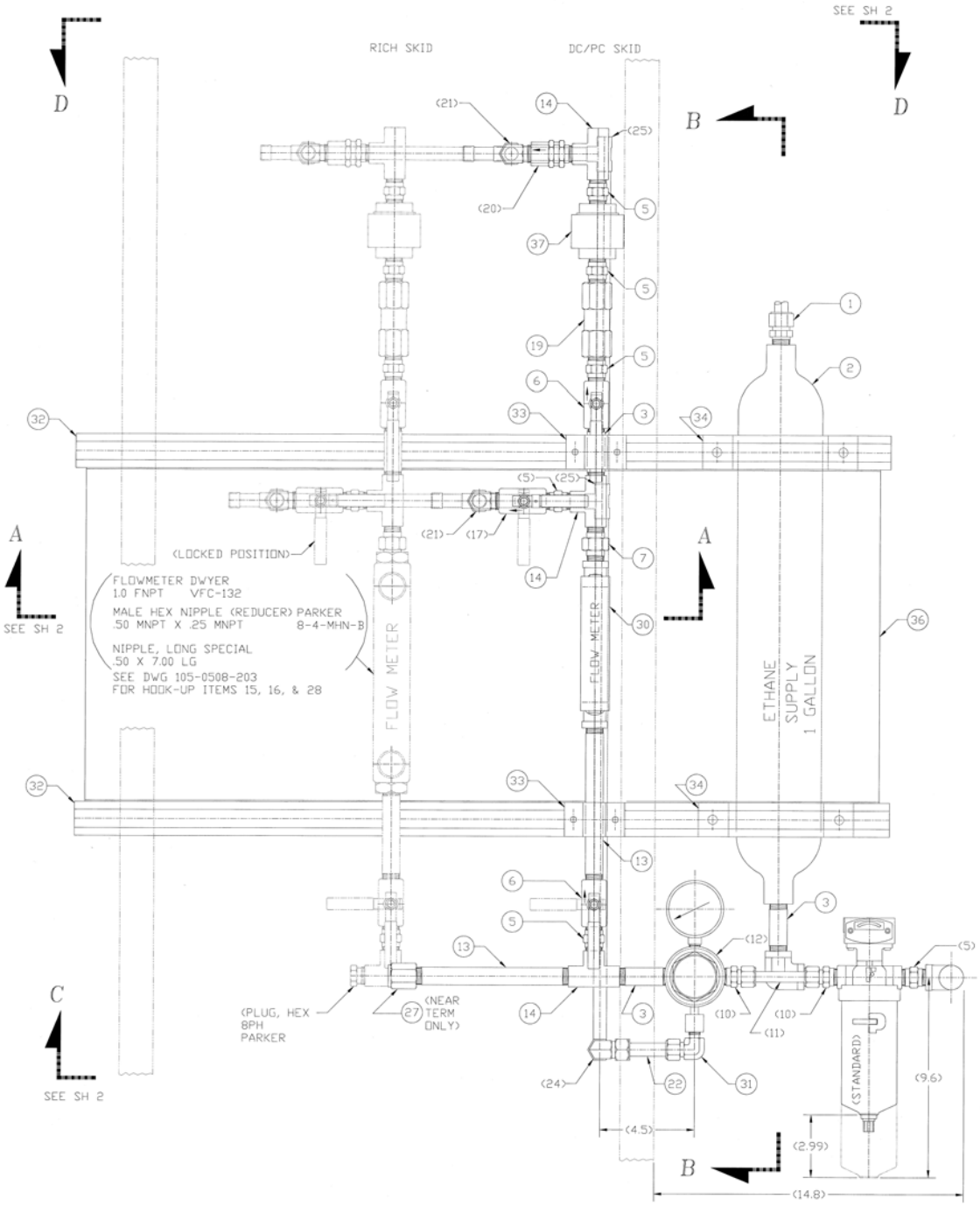

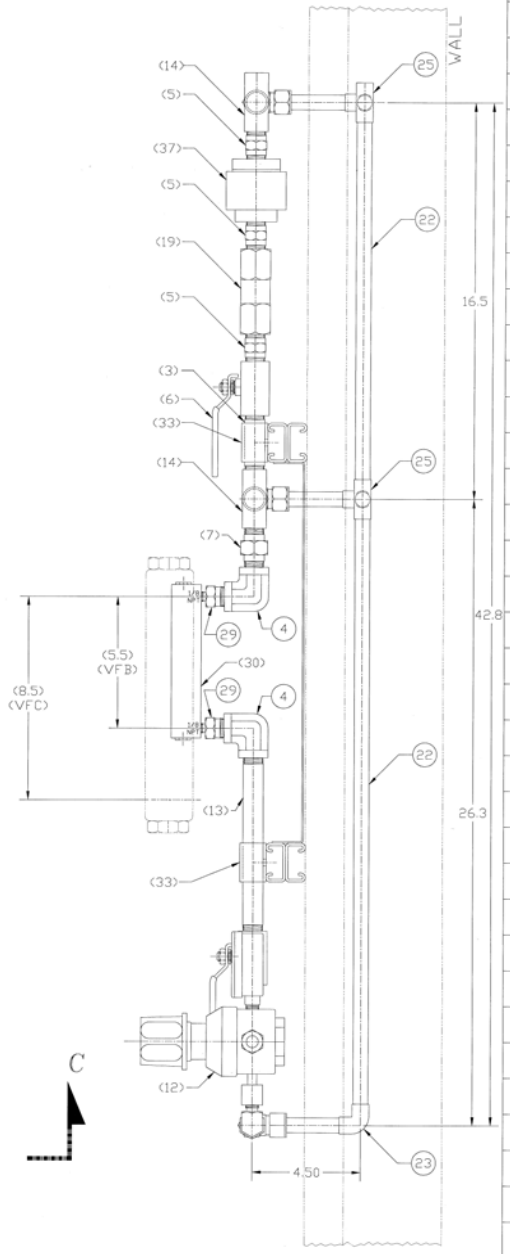

VIEW B–B
FOR REFERENCE ONLY
MUST BE FIELD VERIFIED

ITEM NO.	QTY.	DESCRIPTION	MATL. DWG. NO. OR BNL NO.
37	1	FLAME CHECK .50FNPT	FLAIR FA70-C
36	1	PANEL	
35	4	"U" SHAPE FITTING FOR P4101 CHANNEL	UNISTRUT P2558-35
34	2	PIPE CLAMP FOR 3.50 (4.00 OD) PIPE	UNISTRUT P2558-35
33	2	PIPE CLAMP FOR .50 (.840 OD) PIPE	UNISTRUT P2558-05
32	2	CHANNEL 1.625 X 1.625 X 39.0 LG	UNISTRUT P4101
31	1	MALE ELBOW CONNECTOR .63 COMPR X .25 MNPT	PARKER 10MSEL4N-B
30	1	FLOWMETER .125 FNPT	DWYER VFB-67-BV
29	2	MALE HEX NIPPLE (REDUCER) .50 MNPT X .125 MNPT	PARKER 8-2-MHN-B
28			
27	1	CAP, PIPE .50 FNPT	PARKER CP-8
26	2	CAP, TUBING .50 (FOR 0.63 OD TUBING)	MUELLER WB07007
25	4	TEE .50 X .50 X .50 (FOR 0.63 OD TUBING)	MUELLER WB04006
24	1	ELBOW, UNION .63 COMPR X .63 COMPR	PARKER 10EE10-B
23	1	ELBOW, 90° (SHORT) .50 X .50 (FOR 0.63 OD TUBING)	MUELLER WB01622
22	20'	TUBING, COPPER .50 NOM "K" TYPE 0.63 OD (X 240.00 LG)	
21	2	MALE ELBOW CONNECTOR .63 COMPR X .50 MNPT	PARKER 10MSEL8N-B
20	1	VALVE, RELIEF .50 MNPT (INLET) X .50 FNPT (OUTLET	GENERANT VRVI -500B-V-50
19	1	VALVE, CHECK .50 FNPT	PARKER 8F68L1-B
18	1	VALVE, SOLENOID (N/C) .50 FNPT	ASCO 8210G94
17	1	VALVE, BALL (LOCKING) .50 FNPT	WATTS B-6400-5-LL
16			
15			
14	3	TEE .50 FNPT X .50 FNPT X .50 FNPT	PARKER 8-8-8-FT-B
13	2	NIPPLE, LONG .50 X 8.00 LG	McMASTER-CARR 4568K184
12	1	REGULATOR (HI-FLOW LINE) .50 FNPT X .50 FNPT	CONCOA 483-1002-000
11	8'	TUBING, ANNEALED .50 OD (X 8.00 LG)	BNL I-147XX
10	2	MALE STRAIGHT CONNECTOR .50 COMPR X .50 MNPT	PARKER 8MSC8N-B
9	1	FILTER, ELEMENT	PARKER -2CG
8	1	FILTER, HOUSING .50 FNPT	PARKER HN2S
7	2	NIPPLE, UNION .50 MNPT	MMANASTRIP 3000-500
6	3	VALVE, BALL .50 FNPT	WATTS B-6000-5-UL
5	9	MALE HEX NIPPLE .50 MNPT	PARKER 8-8MHN-B
4	5	ELBOW, FEMALE .50 FNPT	PARKER 8-8-FE-B
3	3	NIPPLE, LONG .50 X 3.00 LG	McMASTER-CARR 4568K175
2	1	SAMPLE CYL	PARKER 8FSC1GS-SS
1	1	MALE STRAIGHT CONNECTOR .63 COMPR X .50 MNPT	PARKER 10MSC8N-B

USED ON DRAWING NO.	QTY. PER ASS'Y.	OUTSTANDING ECN
APPLICATION		

INTERPRET IN GENERAL ACCORDANCE WITH ASME Y14.24M-1989
UNLESS OTHERWISE SPECIFIED
DIMENSIONS ARE IN INCHES
DECIMAL TOLERANCES
.X ± .06
.XX ± .02
.XXX ± .01
ANGULAR TOLERANCE ± 1°
N/A FINISH
BREAK SHARP EDGES
MAX N/A MIN N/A

RHIC

DRAWN BY	E.K. Mahler	05/16/05
DESIGN APPROVAL		
ENGINEER APPROVAL		
ENGINEER SUPERVISOR APPROVAL		
Q.A. APPROVAL		

COLLIDER-ACCELERATOR DEPARTMENT
BROOKHAVEN NATIONAL LABORATORY
UPTON, N.Y. 11973

TITLE: PHENIX
MIXING HOUSE–SUPPLY SYSTEMS
MANIFOLD, SUPPLY ETHANE

SIZE	DRAWING NUMBER	REV.
E	RD105-0508-201	A

Q.A. CATEGORY A-3 | SCALE: — | WEIGHT: — | SHEET 1 OF 2

DWG NO RD105-0508-201 | SHT 1 OF 2 | REV A

NOTES:

REVISIONS						
REV	ZONE	ECN NO.	DESCRIPTION	BY	DATE	CKR	APP
A			INITIAL RELEASE	J.K.M.			

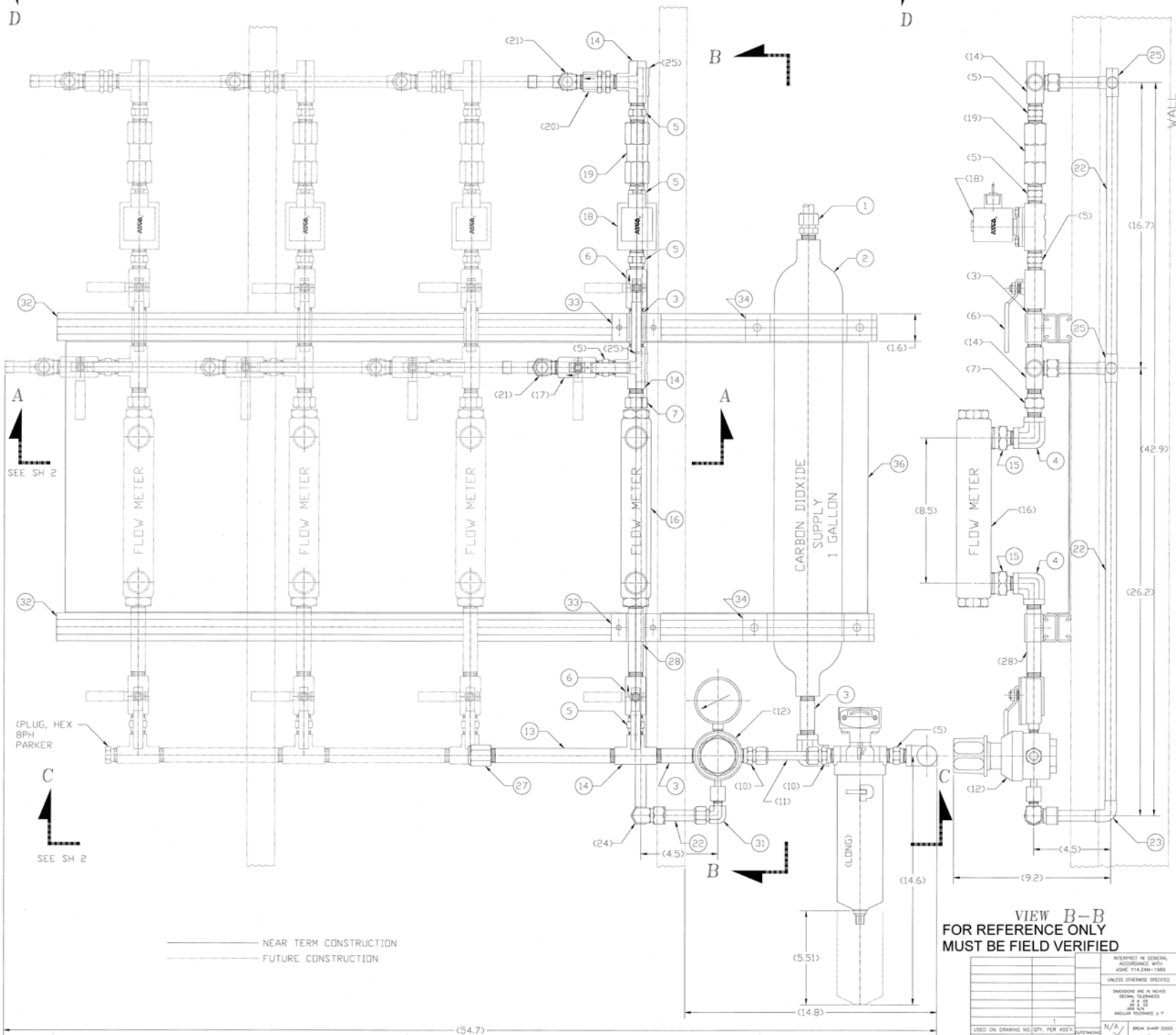

VIEW B–B
FOR REFERENCE ONLY
MUST BE FIELD VERIFIED

ITEM NO.	QTY.	DESCRIPTION	MATL. DWG. NO. OR BNL NO.
36	1	PANEL	
35	4	"U" SHAPE FITTING FOR P4101 CHANNEL	UNISTRUT P2558-35
34	2	PIPE CLAMP FOR 3.50 (4.00 OD) PIPE	UNISTRUT P2558-35
33	2	PIPE CLAMP FOR .50 (.840 OD) PIPE	UNISTRUT P2558-05
32	2	CHANNEL 1.625 X 1.625 X 48.0 LG	UNISTRUT P4101
31	1	MALE ELBOW CONNECTOR .63 COMPR X .25 MNPT	PARKER 10MSEL4N-B
30			
29			
28	1	NIPPLE, LONG .50 X 5.00 LG	McMASTER-CARR 4568K179
27	1	CAP, PIPE .50 FNPT	PARKER CP-8
26	2	CAP, TUBING .50 (FOR 0.63 OD TUBING)	MUELLER WB07007
25	4	TEE .50 X .50 X .50 (FOR 0.63 OD TUBING)	MUELLER WB04006
24	1	ELBOW, UNION .63 COMPR X .63 COMPR	PARKER 10EE10-B
23	1	ELBOW, 90° (SHORT) .50 X .50 (FOR 0.63 OD TUBING)	MUELLER WB01622
22	20'	TUBING, COPPER .50 NOM "K" TYPE .63 OD (X 240.00 LG)	
21	3	MALE ELBOW CONNECTOR .63 COMPR X .50 MNPT	PARKER 10MSEL8N-B
20	1	VALVE, RELIEF .50 MNPT (INLET) X .50 FNPT (OUTLET	GENERANT VRVI -500B-V-50
19	1	VALVE, CHECK .50 FNPT	PARKER 8F68L1-B
18	1	VALVE, SOLENOID (N/O) .50 FNPT	ASCO 8210G34
17	1	VALVE, BALL (LOCKING) .50 FNPT	WATTS B-6400-5-LL
16	1	FLOWMETER 1.00 FNPT	DWYER VFC-132
15	2	MALE HEX NIPPLE (REDUCER) 1.00 MNPT X .50 MNPT	PARKER 16-8-MHN-B
14	3	TEE .50 FNPT X .50 FNPT X .50 FNPT	PARKER 8-8-8-FT-B
13	1	NIPPLE, LONG .50 X 8.00 LG	McMASTER-CARR 4568K184
12	1	REGULATOR (HI-FLOW LINE) .50 FNPT X .50 FNPT	CONCOA 483-2002-000
11	8'	TUBING, ANNEALED .50 OD (X 8.00 LG)	BNL I-147XX
10	2	MALE STRAIGHT CONNECTOR .50 COMPR X .50 MNPT	PARKER 8MSC8N-B
9	1	FILTER, ELEMENT	PARKER 4C (HIGHER FLOW)
8	1	FILTER, HOUSING .50 FNPT	PARKER HN2L-4CSGV
7	2	NIPPLE, UNION .50 MNPT	MMANASTRIP 3000-500
6	3	VALVE, BALL .50 FNPT	WATTS B-6000-5-UL
5	8	MALE HEX NIPPLE .50 MNPT	PARKER 8-8MHN-B
4	5	ELBOW, FEMALE .50 FNPT	PARKER 8-8-FE-B
3	2	NIPPLE, LONG .50 X 3.00 LG	McMASTER-CARR 4568K175
2	1	SAMPLE CYL	PARKER 8FSC1GS-SS
1	1	MALE STRAIGHT CONNECTOR .63 COMPR X .50 MNPT	PARKER 10MSC8N-B

DWG NO RD105-0508-205

USED ON DRAWING NO.	QTY. PER ASS'Y	OUTSTANDING ECN
APPLICATION	1	

INTERPRET IN GENERAL ACCORDANCE WITH ASME Y14.24M-1989

UNLESS OTHERWISE SPECIFIED

DIMENSIONS ARE IN INCHES
DECIMAL TOLERANCES
.X ± .05
.XX ± .02
.XXX ± .010
ANGULAR TOLERANCE ± 1°

FINISH N/A

BREAK SHARP EDGES

MATL N/A MATL N/A

RHIC

DRAWN BY J.K.Malin 9/16/99
DESIGN
CHECKED
ENGINEER
ENGINEER APPROVAL
SUPERVISOR APPROVAL
Q.A. APPROVAL

COLLIDER-ACCELERATOR DEPARTMENT
BROOKHAVEN NATIONAL LABORATORY
UPTON, N.Y. 11973

TITLE: PHENIX
MIXING HOUSE–SUPPLY SYSTEMS
MANIFOLD, SUPPLY CO2

SIZE E | DRAWING NUMBER RD105-0508-203 | REV. A

Q.A. CATEGORY A-3 | SCALE: — | WEIGHT: — | SHEET 1 OF 2

NOTES:

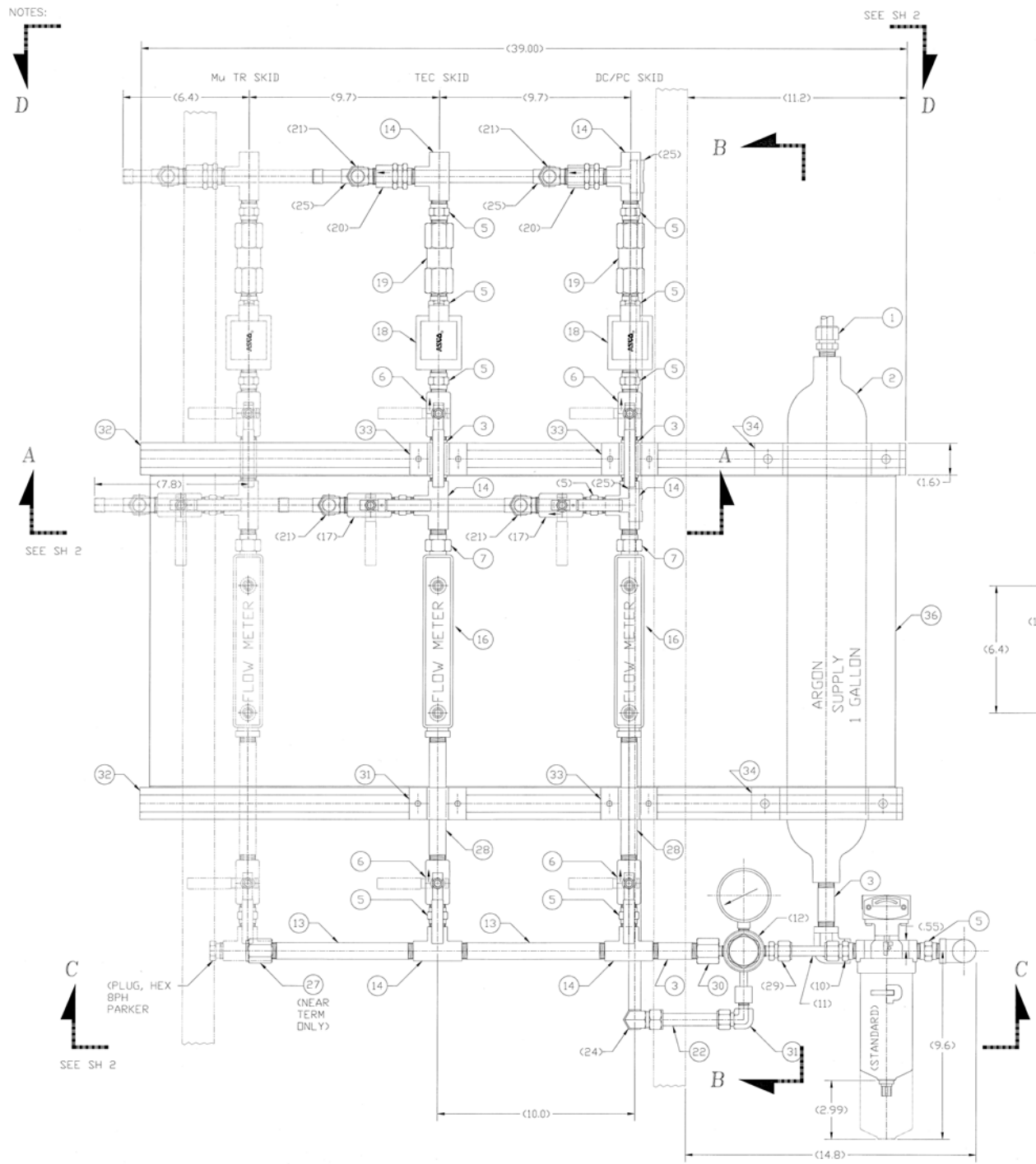

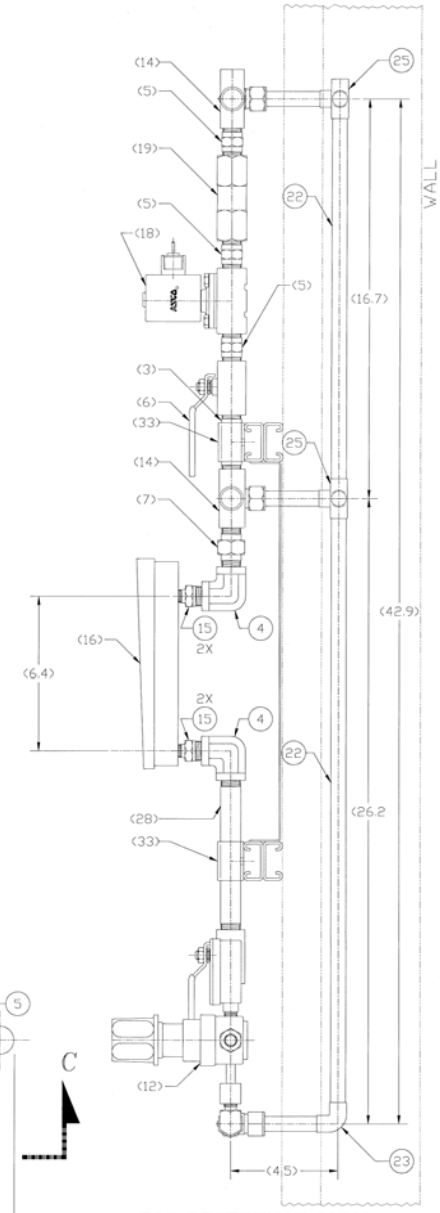

FOR REFERENCE ONLY
MUST BE FIELD VERIFIED

VIEW B–B

NEAR TERM CONSTRUCTION
FUTURE CONSTRUCTION

REVISIONS							
REV	ZONE	ECN NO.	DESCRIPTION	BY	DATE	CHKR	APP
A			INITIAL RELEASE	K.M.			

ITEM NO.	QTY.	DESCRIPTION	MATL. DWG. NO. OR BNL NO.
36	1	PANEL	
35	4	"U" SHAPE FITTING FOR P4101 CHANNEL	UNISTRUT P2558-35
34	2	PIPE CLAMP FOR 3.50 (4.00 OD) PIPE	UNISTRUT P2558-35
33	4	PIPE CLAMP FOR .50 (.840 OD) PIPE	UNISTRUT P2558-05
32	2	CHANNEL 1.625 X 1.625 X 39.0 LG	UNISTRUT P4101
31	1	MALE ELBOW CONNECTOR .63 COMPR X .25 MNPT	PARKER 10MSEL4N-B
30	1	REDUCER, ADAPTER .50 FNPT X .25 MNPT	PARKER 8-4RA-B
29	2	MALE STRAIGHT CONNECTOR .50 COMPR X .25 MNPT	PARKER 8MSC4N-B
28	2	NIPPLE, LONG .50 X 7.00 LG	SPECIAL
27	1	CAP, PIPE .50 FNPT	PARKER CP-8
26	2	CAP, TUBING .50 (FOR .63 OD TUBING)	MUELLER WB07007
25	6	TEE .50 X .50 X .50 (FOR .63 X .63 X .63 TUBING)	MUELLER WB04006
24	1	ELBOW, UNION .63 COMPR X .63 COMPR	PARKER 10EE10-B
23	1	ELBOW, 90° (SHORT) .50 X .50 (FOR .63 X .63 TUBING)	MUELLER WB01622
22	25'	TUBING, COPPER .50 NOM "K" TYPE .63 OD (X 300.00 LG)	
21	4	MALE ELBOW CONNECTOR .63 COMPR X .50 MNPT	PARKER 10MSEL8N-B
20	2	VALVE, RELIEF .50 MNPT (INLET) X .50 FNPT (OUTLET	GENERANT VRVI -500B-V-60
19	2	VALVE, CHECK .50 FNPT	PARKER 8F68L1-B
18	2	VALVE, SOLENOID (N/O) .50 FNPT	ASCO 8210G34
17	2	VALVE, BALL (LOCKING) .50 FNPT	WATTS B-6400-5-LL
16	2	FLOWMETER .25 FNPT	DWYER RMB-53-BV
15	2	MALE HEX NIPPLE (REDUCER) .50 MNPT X .25 MNPT	PARKER 8-4-MHN-B
14	6	TEE .50 FNPT X .50 FNPT X .50 FNPT	PARKER 8-8-8-FT-B
13	2	NIPPLE, LONG .50 X 8.00 LG	McMASTER-CARR 4568K184
12	1	REGULATOR (HI-FLOW LINE) .25 FNPT X .25 FNPT	CONCOA 405-2002-000
11	8'	TUBING, ANNEALED .50 OD (X 8.00 LG)	BNL I-147XX
10	1	MALE STRAIGHT CONNECTOR .50 COMPR X .50 MNPT	PARKER 8MSC8N-B
9	1	FILTER, ELEMENT	PARKER 2C
8	1	FILTER, HOUSING .50 FNPT	PARKER HN2S-2CSGV
7	3	NIPPLE, UNION .50 MNPT	MMANASTRIP 3000-500
6	5	VALVE, BALL .50 FNPT	WATTS B-6000-5-UL
5	12	MALE HEX NIPPLE .50 MNPT	PARKER 8-8MHN-B
4	5	ELBOW, FEMALE .50 FNPT	PARKER 8-8-FE-B
3	4	NIPPLE, LONG .50 X 3.00 LG	McMASTER-CARR 4568K175
2	1	SAMPLE CYL	PARKER 8FSC1GS-SS
1	1	MALE STRAIGHT CONNECTOR .63 COMPR X .50 MNPT	PARKER 10MSC8N-B

DWG NO RD105-0508-204 A.5 2 1 3 4

USED ON DRAWING NO.	QTY. PER ASS'Y.
APPLICATION	1

OUTSTANDING ECN

INTERPRET IN GENERAL ACCORDANCE WITH ASME Y14.24M-1989

UNLESS OTHERWISE SPECIFIED

DIMENSIONS ARE IN INCHES
DECIMAL TOLERANCES
.X ± .06
.XX ± .02
.XXX N/A
ANGULAR TOLERANCE ± 1°

N/A FINISH

BREAK SHARP EDGES
MAX N/A MIN N/A

RHIC

DRAWN BY K.M. 04/16/99
DESIGN APPROVAL CHECKER
ENGINEER APPROVAL SUPERVISOR
APPROVAL
Q.A. APPROVAL

COLLIDER-ACCELERATOR DEPARTMENT
BROOKHAVEN NATIONAL LABORATORY
UPTON, N.Y. 11973

TITLE: PHENIX
MIXING HOUSE–SUPPLY SYSTEMS
MANIFOLD, SUPPLY ARGON

SIZE E | DRAWING NUMBER RD105-0508-204 | REV. A

Q.A. CATEGORY A-3 | SCALE: — | WEIGHT: — | SHEET 1 OF 2

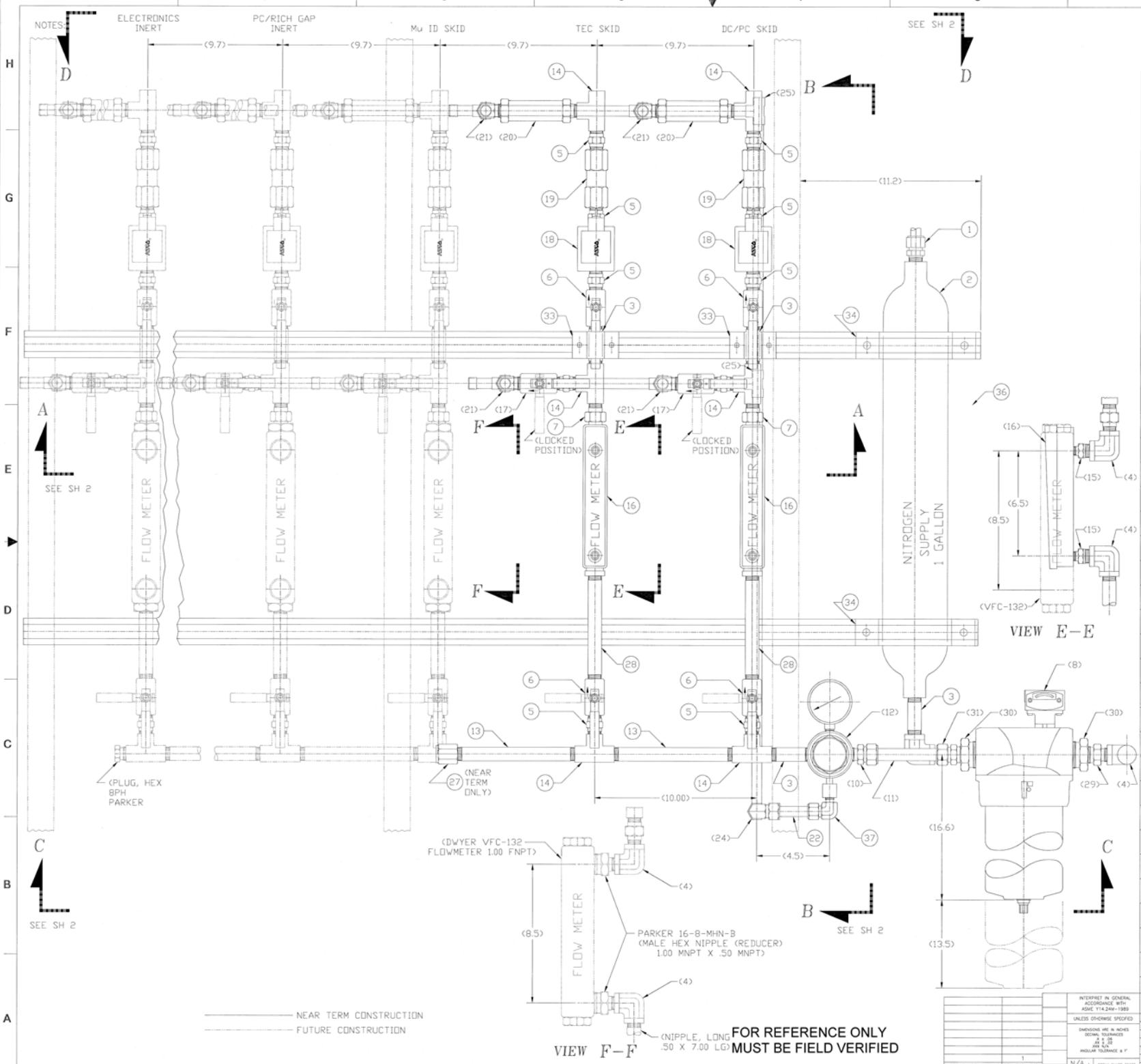

REV	ZONE	ECN NO.	DESCRIPTION	BY	DATE	CKR	APP
A			INITIAL RELEASE	K.K.			

ITEM NO.	QTY.	DESCRIPTION	MAT'L, DWG. NO. OR BNL NO.
37	1	MALE ELBOW CONNECTOR .63 COMPR X .25 MNPT	PARKER 10MSEL4N-B
36	1	PANEL	
35	6	"U" SHAPE FITTING FOR P4101 CHANNEL	UNISTRUT P2558-35
34	2	PIPE CLAMP FOR 3.50 (4.00 OD) PIPE	UNISTRUT P2558-35
33	4	PIPE CLAMP FOR .50 (.840 OD) PIPE	UNISTRUT P2558-05
32	2	CHANNEL 1.625 X 1.625 X 63.0 LG	UNISTRUT P4101
31	1	MALE STRAIGHT CONNECTOR .75 COMPR X .75 MNPT	PARKER 12MSC12N-B
30	2	REDUCING BUSHING 1.25 MNPT X .75 FNPT	PARKER 20-12-RB-B
29	1	MALE HEX NIPPLE (REDUCER) .75 MNPT X .50 MNPT	PARKER 12-8-MHN-B
28	2	NIPPLE, LONG .50 X 5.00 LG	McMASTER-CARR 4568K179
27	1	CAP, PIPE .50 FNPT	PARKER CP-8
26	2	CAP, TUBING .50 (FOR 0.63 OD TUBING)	MUELLER WB07007
25	6	TEE .50 X .50 X .50 (FOR 0.63 OD TUBING)	MUELLER WB04006
24	1	ELBOW, UNION .63 COMPR X .63 COMPR	PARKER 10EE10-B
23	1	ELBOW, 90° (SHORT) .50 X .50 (FOR 0.63 OD TUBING)	MUELLER WB01622
22	25'	TUBING, COPPER .50 NOM "K" TYPE 0.63 OD (X 240.00 LG)	
21	4	MALE ELBOW CONNECTOR .63 COMPR X .50 MNPT	PARKER 10MSEL8N-B
20	2	VALVE, RELIEF .50 MNPT (INLET) X .50 FNPT (OUTLET	GENERANT CRV P4-500B-T-50
19	2	VALVE, CHECK .50 FNPT	PARKER 8F68L1-B
18	2	VALVE, SOLENOID (N/O) .50 FNPT	ASCO 8210G34
17	2	VALVE, BALL (LOCKING) .50 FNPT	WATTS B-6400-5-LL
16	2	FLOWMETER .25 FNPT	DWYER RMB-54-BV
15	4	MALE HEX NIPPLE (REDUCER) .50 MNPT X .25 MNPT	PARKER 8-4-MHN-B
14	6	TEE .50 FNPT X .50 FNPT X .50 FNPT	PARKER 8-8-8-FT-B
13	3	NIPPLE, LONG .50 X 8.00 LG	McMASTER-CARR 4568K184
12	1	REGULATOR (HI-FLOW LINE) .50 FNPT X .50 FNPT	CONCOA 483-2002-000
11	8'	TUBING, ANNEALED .75 OD (X 8.00 LG)	BNL I-147XX
10	1	MALE STRAIGHT CONNECTOR .75 COMPR X .50 MNPT	PARKER 12MSC8N-B
9	1	FILTER, ELEMENT	PARKER
8	1	FILTER, HOUSING 1.25 FNPT	PARKER HN5S
7	3	NIPPLE, UNION .50 MNPT	MMANASTRIP 3000-500
6	5	VALVE, BALL .50 FNPT	WATTS B-6000-5-UL
5	11	MALE HEX NIPPLE .50 MNPT	PARKER 8-8MHN-B
4	7	ELBOW, FEMALE .50 FNPT	PARKER 8-8-FE-B
3	4	NIPPLE, LONG .50 X 3.00 LG	McMASTER-CARR 4568K175
2	1	SAMPLE CYL	PARKER 8FSC1GS-SS
1	1	MALE STRAIGHT CONNECTOR .63 COMPR X .50 MNPT	PARKER 10MSC8N-B

USED ON DRAWING NO. | QTY. PER ASSY. | OUTSTANDING ECN | APPLICATION

INTERPRET IN GENERAL ACCORDANCE WITH ASME Y14.24M-1989
UNLESS OTHERWISE SPECIFIED
DIMENSIONS ARE IN INCHES
DECIMAL TOLERANCES
.X ± .06
.XX ± .03
.XXX N/A
ANGULAR TOLERANCE ± 1°
FINISH: N/A | BREAK SHARP EDGES MAX N/A MIN N/A

DRAWN BY: E.K. Kahn 10/12/99
DESIGN APPROVAL (CHIEF)
ENGINEER SUPERVISOR APPROVAL
Q.A. APPROVAL

RHIC

COLLIDER-ACCELERATOR DEPARTMENT
BROOKHAVEN NATIONAL LABORATORY
UPTON, N.Y. 11973

TITLE: PHENIX
MIXING HOUSE-SUPPLY SYSTEMS
MANIFOLD, SUPPLY NITROGEN

SIZE: E | DRAWING NUMBER: RD105-0508-205 | REV: A
Q.A. CATEGORY: A-3 | SCALE: — | WEIGHT: — | SHEET 1 OF 2

DWG NO RD105-0508-205 | SHT 1 OF 2 | A.S.